POSHA
Electronic Engineering Internship Assignment

1.Power Supply Block

5V IN → Schottky → TPS7A3301(LDO) (5V→3.3V, ultra-low-noise) → 3V3 rail

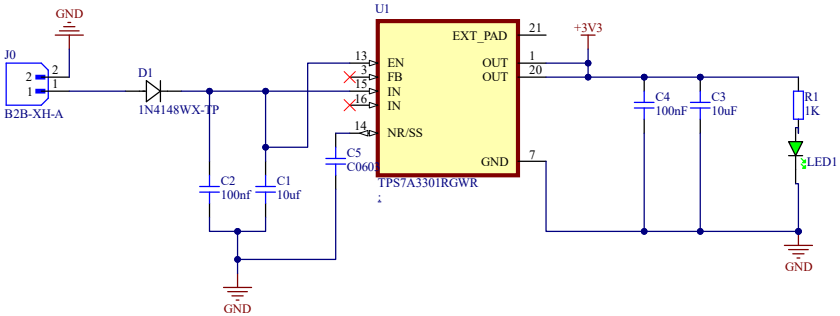

2.Precision Voltage Reference

A REF3033 provides a rock-stable 3.3V to excite the load cell and serve as the ADC's reference voltage.

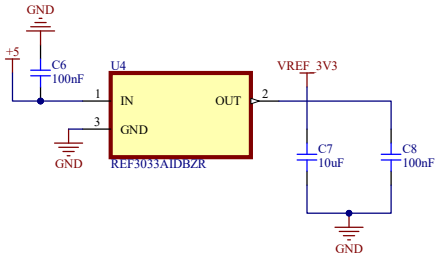

4. STM32G431CBT6 MCU (B)

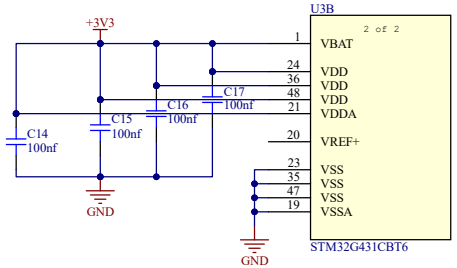

3.ADS1220 ADC + Load Cell Connector

Load Cell → M12 Connector → TVS + RC Filter → ADS1220 (SPI ADC) → SPI bus out

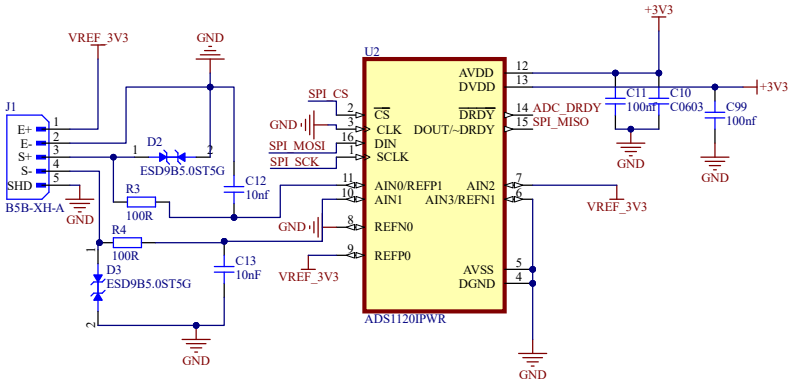

4. STM32G431CBT6 MCU (A)

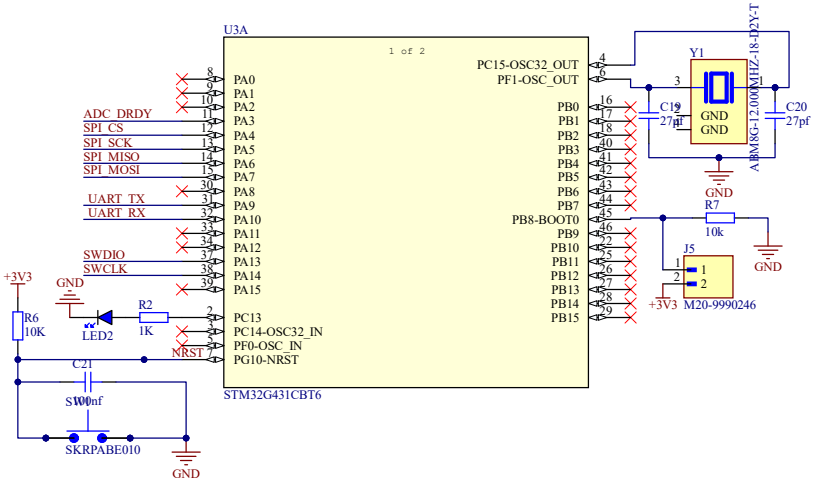

5.Debug Connectors

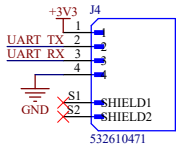

5A. UART Debug Header

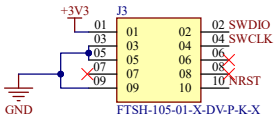

5B. SWD Header

Title	Posha_electronic assignment(5)	
Size A3	Number	Revision v1.0
Date: 3-30-2026		Sheet of 2k23/EE/244
File: C:\Users\..\Sheet1.SchDoc		Drawn By: Shubham Gupta