Pattern Recognition 157 (2025) 110895

Contents lists available at ScienceDirect

Pattern Recognition

journal homepage: www.elsevier.com/locate/pr

Camouflaged Object Detection via Dual-branch Fusion and Dual Self-similarity constraints

Haozhe Yang, Yuan Zhu, Ke Sun, Haoyang Ding, Xianming Lin *

Key Laboratory of Multimedia Trusted Perception and Efficient Computing, Ministry of Education of China, School of Informatics, Xiamen University, 361005, PR China

ARTICLE INFO

Keywords:
Camouflaged Object Detection
Dual-branch feature fusion
Self-similarity
Edge enhancement
Small-scale object localization

ABSTRACT

Camouflaged Object Detection (COD) remains a challenging task due to the inherent difficulty in distinguishing concealed objects from their surroundings, primarily owing to their high visual similarity. Current research efforts have been insufficient in distinguishing the similarity differences between camouflaged objects and their corresponding backgrounds, leading to suboptimal performance, particularly when locating small-scale objects. To solve this issue, we introduce a novel Dual-branch Fusion and Dual Self-similarity Network (DSNet) comprising three modules. The first, a dual-branch fusion, mimics human observation of camouflaged objects and extracts multi-angle information. Dual-branch features are then decoded using a symmetric joint decoder module with channel interaction via multi-stage inter-group interaction. Inspired by natural organisms' self-similarity, the self-similarity constraint module employs global and mutual constraints to identify subtle foreground-background differences. DSNet shows superior performance in experiments, and the constraint module can enhance other models as a plug-and-play component, further boosting overall performance.

1. Introduction

Camouflage is a common strategy for preys to avoid being detected by predators. In recent years, the field of computer vision has encountered the challenging task of Camouflaged Object Detection (COD), which entails recognizing objects in scenes where the foreground and background exhibit high visual similarity. This task bears significant research value in various domains, such as medicine [1,2], the discovery of rare species [3], and even human art [4].

In recent times, substantial strides has been made in the field of COD, with numerous research studies exploring various approaches, which can be categorized into two groups. The first category comprises biomimetic frameworks that emulate the predatory strategies observed in nature. Notable works include SINet [5] and PFNet [6]. The second approach involves diverse perspectives to discern critical distinctions. Yan et al. [7] proposed MirrorNet, which focuses on reflective characteristics, while Pang et al. [8] introduced ZoomNet, a mixed-scale triplet network employing a scaling strategy. Zheng et al. [9] implemented multiple views through data augmentation, capturing essential boundary and semantic information by comparing and fusing the extracted multi-view features. Furthermore, in an effort to retain edge detail information, Chen [10] developed a boundary-guided network, and Zhou [11] introduced a novel feature aggregation and propagation network with integrated boundary considerations. However, extensive experiments have revealed that current CNN-based methods for COD encounter challenges when it comes to accurately detecting small-scale objects and slender parts. As demonstrated in the first and second rows of Fig. 1, both ERRNet [12] and SINet exhibit limitations in detecting small objects within the scene. Simultaneously, within the third and fourth rows of Fig. 1, we have observed difficulties in accurately detecting delicate components of camouflaged objects, such as legs, which mildly impacts accuracy. These findings suggest that existing models lack precise positioning information for small objects and encounter challenges in establishing connections between the whole and constituent parts of camouflaged objects.

Predators rely on information from multiple perspectives to locate small objects and discern their similarities and differences within their surroundings. Inspired by this rule, we present a novel network to address the aforementioned challenges. To begin, we emulate human observation from various angles and introduce a Dual-branch Feature Fusion Module (DFFM). These different branches fuse features from diverse angles. Additionally, we devise a Joint Decoder Module (JDM) for features acquired from the dual-branch method, which generates a coarse prediction map using a symmetric structure. In the optimization process, we employ an inter-group interaction

* Correspondence to: Xiamen University, 422 Siming South Road, Siming District, Xiamen City, Fujian Province, China.
E-mail addresses: yanghaozhe@stu.xmu.edu.cn (H. Yang), zhuyuan26zp@163.com (Y. Zhu), skjack@stu.xmu.edu.cn (K. Sun), iamxiaoding@stu.xmu.edu.cn (H. Ding), linxm@xmu.edu.cn (X. Lin).

https://doi.org/10.1016/j.patcog.2024.110895
Received 22 September 2023; Received in revised form 7 July 2024; Accepted 13 August 2024
Available online 16 August 2024
0031-3203/© 2024 Elsevier Ltd. All rights are reserved, including those for text and data mining, AI training, and similar technologies.

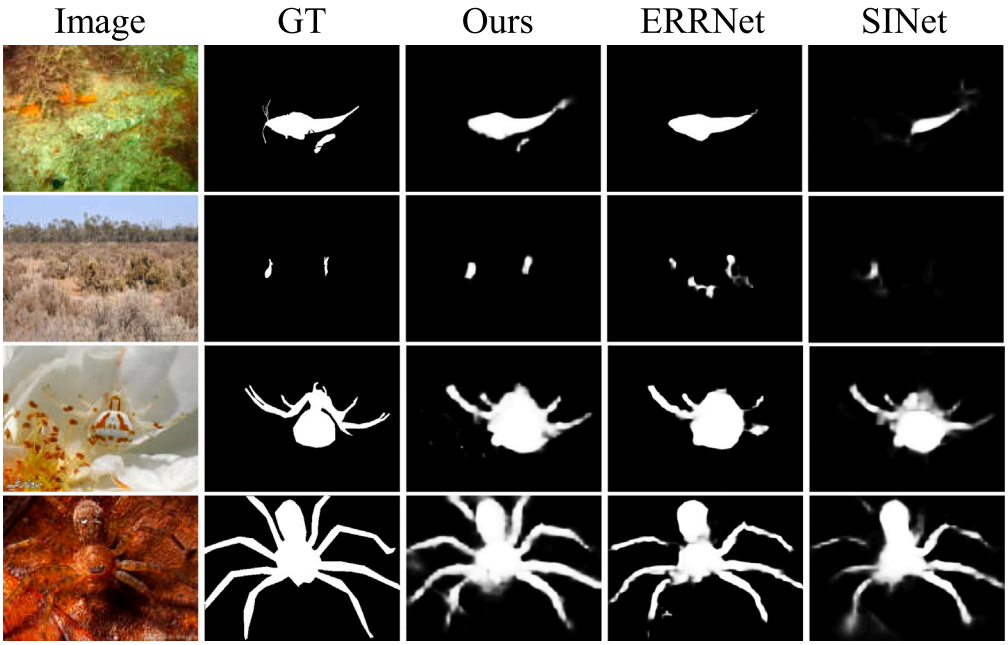

Fig. 1. The current models exhibit suboptimal performance in detecting small-scale camouflaged objects (as seen in the first and second rows), and they lack sufficient exploration of details for some specific objects (as seen in the third and fourth rows). Our method has effectively enhanced the detection performance in these scenarios.

method to facilitate information exchange between channels. Through a multi-stage refinement process, camouflaged objects are gradually and precisely localized. Furthermore, while the camouflaged object shares a high visual similarity with the background, there remains a subtle distinction between the object's self-similarity feature to its surroundings. By contrasting the subtle differences between them, we can enhance the accurate detection of the intricate edge information. Building upon this, we incorporate a Self-Similarity Constraint Module (SSCM) as a plug-and-play component. This module oversees both global constraints and foreground-background mutual constraints without introducing additional prior information. Global constraints enhance the model's performance, while mutual constraints assist in managing self-similarity between the foreground and background by reducing foreground self-similarity and increasing the distance between them. To facilitate supervision, we employ a self-similarity interaction loss. By introducing the aforementioned modules, we present the approach named Dual-branch Fusion and Dual Self-similarity Network (DSNet). As shown in Fig. 1, DSNet effectively addresses the issue of suboptimal detection of small-scale and complicated camouflaged objects, while precisely distinguishing between the foreground and background through self-similarity constraints.

Our contributions are mainly as follows:

- We first consider the global and mutual self-similarity in camouflaged objects and further propose a self-similarity constraint module to mine the discriminative features between background and foreground.
- We introduce the Dual-branch Fusion and Dual Self-similarity Network (DSNet) to enhance the detection of small-scale camouflaged objects and accurately detect intricate edges.
- Experiments show that DSNet outperforms existing methods and excels in locating small objects, and SSCM further improves performance as a plug-and-play module.

In this paper, we first introduce the relevant settings and related work to COD in Section 2.1 and explores feature aggregation Section 2.2. Then we provide a detailed description of the proposed method, DSNet, including the Dual-branch Feature Fusion Module (Section 3.2), Joint Decoder Module (Section 3.3), and Self-Similarity Constraint Module (Section 3.4). The experimental setup and results are elaborated on in Section 4. In Section 5, we summarize the proposed method and discuss its limitations.

2. Related work

2.1. Camouflaged Object Detection (COD)

As a specialized task in visual detection, COD has seen significant advancements, largely attributed to the availability of large-scale datasets. Earlier studies [13,14] using handcrafted features to identify camouflaged objects. However, recent years have witnessed the emergence of deep learning based approaches as the forefront in this field. Notably, Fan et al. [5,15] introduced a large-scale dataset for COD and proposed a network framework for search and recognition, serving as inspiration for several subsequent studies [16–18]. For instance, Mei et al. [6] presented a bionic framework called PFNet. Some approaches go further by employing additional methods to distinguish between foreground and background. Li et al. [19] developed a joint salient object detection and camouflage object detection network, optimizing the detection capabilities of both tasks through interaction. DGNet [20] incorporates gradient information, while Pang et al. [8] introduced ZoomNet, a mixed-scale triplet network that mimics human behavior when viewing blurred images by zooming in and out. To precisely locate the edge regions of the camouflaged foreground, Zhai et al. [21] developed a learning method using mutual guidance between object detection and boundary detection. Sun et al. [22] explored additional object-related edge semantics to guide COD representation learning, and Zhu et al. [23] used a two-stream separated attention module to highlight the borders of the camouflaged objects. To refine multilevel context features, Liu et al. [17] proposed Bi-RRNet to obtain a highly discriminative high-resolution semantic feature representation. In contrast, our approach mimics human behavior by observing from multiple angles to enhance the detection of small-scale camouflaged objects. Additionally, our method underscores the distinctions in self-similarity between the foreground and background, fortifies object edges, and boosts the model's detection capabilities.

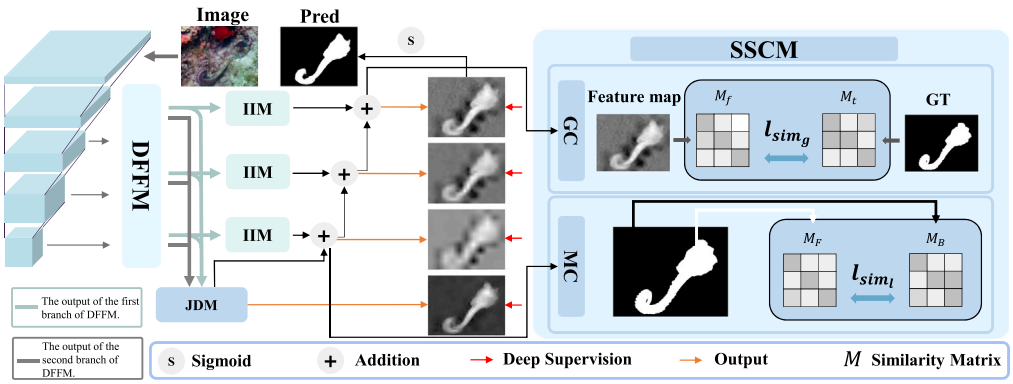

Fig. 2. Overview of Dual-branch Fusion and Dual Self-similarity Network (DSNet) consists of three modules. We first design a Dual-branch Feature Fusion Module (DFFM) to enhance the feature. JDM decodes the feature of the two branches in the form of a symmetric product. IIM is used to complete the information exchange between channels and combine multi-stage refinement to obtain the final prediction result. In SSCM, we constrain the self-similarity distance between the foreground and the background through Global Constraint (GC) and Mutual Constraint (MC) to strengthen the detection of edges.

2.2. Feature fusion

Feature fusion is a prevalent technique in pattern recognition and finds applications in diverse computer vision tasks. It significantly contributes to enhancing the effectiveness of detection and segmentation, especially when dealing with the identification of small-scale objects. Low-level feature possess higher resolution, offering more detailed information, however, they are also susceptible to noise. In contrast, high-level features exhibit lower resolution but contain richer semantic information. By combining the advantages of both types, feature fusion elevates the model's performance. In COD, feature fusion is employed to enhance early-stage features, thereby ensuring superior model performance during the optimization process.

Feature fusion methods can be categorized as early fusion and late fusion. Early fusion involves combining multi-layer features and training the predictor on these fused features. Commonly used operations in early fusion include concatenation and addition [24]. In contrast, late fusion involves conducting detection on certain fusion layers before the final fusion is completed. Multiple results are then integrated to generate the ultimate output. The feature pyramid structure [25] is a typical example of late fusion. In order to fuse features from various perspectives effectively, we utilize dual-branch feature fusion to obtain more contextual information. One branch employs dilated convolutions to expand the receptive field, while the other ensures the integration of low-resolution features with more intricate semantic information at a higher level.

3. Method

3.1. Overview

Fig. 2 illustrates the overall architecture of Dual-branch Fusion and Dual Self-similarity Network (DSNet). Initially, the input image $I \in \mathbb{R}^{W\times H\times 3}$ is fed into the backbone network to extract a set of feature with resolution $\frac{H}{2^k} \times \frac{W}{2^k}, k \in \{1,2,3,4,5\}$. Given that high-resolution features from lower layers often contain noise, our focus for fusion is solely on the features from the last three layers. To enhance context information, particularly beneficial for small-scale camouflage objects, we devised a Dual-branch Feature Fusion Module (DFFM). One branch utilizes a large dilated convolution to broaden the receptive field, while the other ensures the integration of high-level semantic information into the low-resolution features. To fully merge and decode these feature from both branches, we developed a Joint Decoder Module (JDM) to generate preliminary predictions through a symmetrical structure. Recognizing the effectiveness of multi-stage refinement [26], we adopt a multi-stage approach with Inter-group Interaction Module (IIM) for precise localization. Moreover, we introduced a Self-Similarity Constraint Module (SSCM) to capture the subtle distinctions between foreground and background through global and mutual constraints.

3.2. Dual-branch Feature Fusion Module

To enhance the detection of small-scale camouflaged objects, obtaining sufficient prior information at the initial stage is crucial. To achieve this, we employ a Dual-branch Feature Fusion Module (DFFM), simulating the way humans observe camouflaged objects from various angles within different environments. These two branches represent distinct observation perspectives, as illustrated in Fig. 3. We divide them into two branches, namely Simple Receptive Field (SRF) and Merge First (MF). Both branches take the final three layers of features extracted from the backbone network as input and produce improved features as output.

SRF. To expand the receptive field without compromising spatial resolution, the first branch employs dilated convolution instead of the standard convolution. Unlike Fan et al.'s RF module [5], we have designed this branch with only two parallel components. This design accounts for the discontinuity inherent in the dilated convolution kernel, preventing information loss and the inclusion of irrelevant long-distance information. Furthermore, recognizing that small-scale objects do not require an extensive receptive field, whereas a larger dilation rate proves more advantageous for large-scale objects, we have allocated specific functions to each branch. The first branch primarily concentrates on enhancing the features related to large-scale camouflaged objects, while the second branch prioritizes smaller ones. To streamline the process, we have reduced the number of channels using a Conv+BatchNorm+Relu (CBR) module and implemented an 18 dilation rate in the first segment to further facilitate normalization. The second segment directly reduces channel numbers via the CBR module. Finally, we combine the outputs of these two segments, producing the SRF output through the ReLU function.

MF. The second branch is specialized in detecting small-scale objects, while the first branch is designed for the detection of large-scale objects. Inspired by FSSD [25], the second branch employs multi-scale fusion to combine deep and shallow semantic information, enabling low-level features to incorporate more advanced semantic features. The MF branch integrates feature from the last three layers of the backbone network and processes them through a CBR module and two 1×1 convolutional layers. Subsequently, the outputs undergo upsampling to generate coarse prediction maps for each layer, and these maps receive supervision through the utilization of the ground truth.

The overall design of dual-branch feature fusion module replicates how humans observe camouflaged objects from various angles, offering more comprehensive prior information for subsequent refinement. However, it can only estimate the general position of the camouflaged object. To precisely pinpoint the object and capture its structure, a more advanced approach is required. Simultaneously, facilitating the

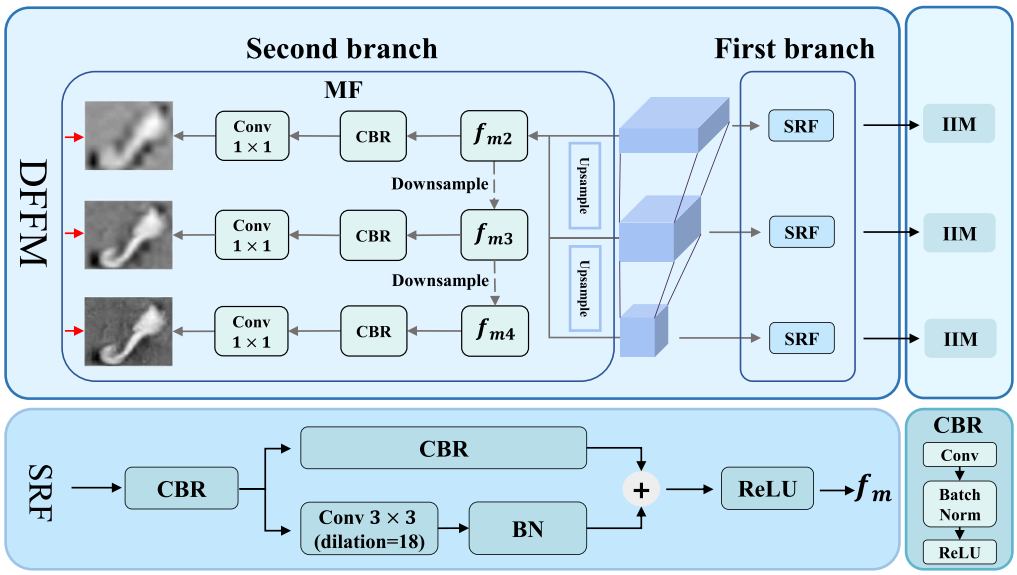

Fig. 3. The architecture of DFFM. DFFM includes the feature fusion of two branches. In SRF, a larger dilated convolution is used to expand the receptive field, and the output feature f_m is obtained. In MF, we fuse (f_{m2}, f_{m3}, f_{m4}) to ensure that low-resolution features are combined with high-level more complex semantic information. Finally, the output of MF is supervised by GT.

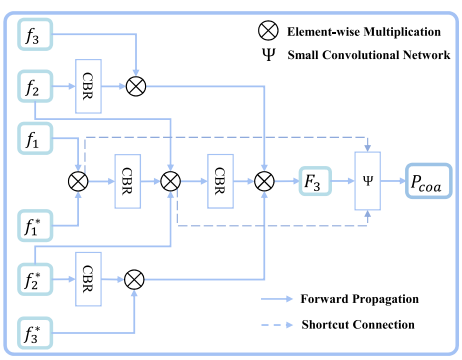

Fig. 4. The architecture of JDM. Using a symmetrical structure, the enhanced feature obtained by SRF and MF are inter-elementally multiplied, and the feature of different layers are fused, then rough prediction map P_{coa} is obtained. The feature obtained by the SRF branch are denoted as f_m, and the feature obtained by the MF branch are denoted as f_m^*, where $m \in \{1, 2, 3\}$.

exchange of information between channels proves crucial for the learning process. To address this issue, we introduce a novel method for channel feature exchange called the Inter-group Interaction Module (IIM). This module learns global interaction information by dividing all feature channels into two groups and enabling complete interaction through full permutations of these groups. For feature map f_1, its representation can be defined as:

$$F_{op} = \mathrm{CAT}(f_{p1}, f_{p2}) + \mathrm{CAT}(f_{p2}, f_{p1}) + f_1, \tag{1}$$

where F_{op} represents the feature obtained by fully permuting and combining the original feature, while f_{p1} and f_{p2} represent the feature obtained after splitting f_1 into two groups.

3.3. Joint decoder module

After obtaining the enhanced feature through encoding, it is necessary to map the feature back to the original image size. This process involves multiple upsampling steps in the decoder. To comprehensively locate camouflaged objects from the fused dual-branch feature, we have developed the Joint Decoder Module (JDM), as illustrated in Fig. 4.

The input to the JDM comprises the feature acquired from both branches. The feature obtained by the SRF branch is denoted as f_m, while the feature obtained from the MF branch is denoted as f_m^*, where $m \in \{1, 2, 3\}$. Specifically, we utilize the symmetrical structure to facilitate the fusion of features from both two branches. Initially, we multiply f_1 by f_1^* to yield the feature F_1, which is subsequently upsampled and processed through a CBR module. Then, we proceed to multiply F_1, f_2, f_2^*, and derive the F_2:

$$F_1 = f_1 \times f_1^*, \tag{2}$$

$$F_2 = \mathrm{CBR}(\mathrm{Upsample}(F_1)) \times f_2 \times f_2^*. \tag{3}$$

For the feature maps f_2^* and f_2, they are fused with the feature of their respective upper layers, and multiplied after upsampling, that is, $f_{23} = \mathrm{CBR}(\mathrm{Upsample}(f_2)) \times f_3$, $f_{23}^* = \mathrm{CBR}(\mathrm{Upsample}(f_2^*)) \times f_3^*$. Then we fuse the feature of the three layers:

$$F_3 = \mathrm{CBR}(\mathrm{Upsample}(F_2)) \times f_{23} \times f_{23}^*. \tag{4}$$

After acquiring the feature with smaller maps, namely F_1, F_2, and F_3, concatenation operation is executed to decode them to the final stage:

$$F_{12} = \mathrm{CBR}(\mathrm{CAT}(\mathrm{CBR}(\mathrm{Upsample}(F_1)), F_2)), \tag{5}$$

$$F_{123} = \mathrm{CBR}(\mathrm{CAT}(\mathrm{CBR}(\mathrm{Upsample}(F_{12})), F_3)). \tag{6}$$

Finally, the size is restored to match the original image size using two convolutional layers, resulting in the generation of the preliminary prediction image denoted as P_{coa}, where Conv represents the 1×1 convolutional layer:

$$P_{coa} = \mathrm{Conv}(\mathrm{CBR}(F_{123})). \tag{7}$$

3.4. Self-Similarity Constraint Module

To explicitly uncover the subtle distinctions between the self-similarity of the camouflaged objects and their surrounding environment, we introduce a Self-Similarity Constraint Module (SSCM). This module comprises two components: the Global Constraint (GC) and the Mutual Constraint (MC), depicted in Fig. 2. The GC module aims to generate the model's final predictions closer to the ground truth. Additionally, the MC module concentrates on enhancing the

differentiation between foreground and background and improving the clarity of the edge information between them. Specifically, this module reduces the self-similarity distance within the foreground. On the other hand, it increases the self-similarity distance between the foreground and background by utilizing a similarity interaction loss.

Global Constraint (GC). Utilizing features with detailed information is crucial for achieving precision while accounting for global constraints. Therefore, our focus lies in harnessing the feature F_f, obtained from the final stage of the multi-stage inter-group interaction module. Directly calculating self-similarity on the feature map would yield a large matrix, increasing computational complexity. Therefore, We segment F_f into $N \times N$ blocks with standardized process to identify self-similarity across distance, as indicated below:

$$W_{normed} = \frac{F_f}{\sqrt{\sum_{i=0}^{N} \sum_{j=0}^{N} F_{f_{ij}}^2}}. \tag{8}$$

Furthermore, it is worth noting that due to the nature of camouflaged objects, similar features are likely to exhibit high similarity. Hence, employing the blocks can mitigate self-similarity and impose constraints more effectively. Subsequently, we compute the self-similarity matrix M_f based on the block features:

$$M_f = \frac{W_{normed} + W_{normed}^T + 1}{2}. \tag{9}$$

Finally, we can calculate the mean squared error of M_f and GT, denoted as L_{sim_g}.

Mutual Constraint (MC). Achieving accurate predictions for complex scenes necessitates the utilization of feature maps, including edge details. However, employing an excessively fine feature map may result in information loss, potentially leading to suboptimal performance. To solve this issue, we introduce a local biased constraint termed the Mutual Constraint (MC).

From the inter-group interaction in the initial stage, we obtain foreground feature F_o and background feature F_b. Then, to reduce the self-similarity distance within the foreground, we compute both positive and negative similarity matrices. These matrices are denoted as $M_F = F_o \times F_o^T$ and $M_B = F_b \times F_b^T$, respectively. Specifically, the positive similarity matrix employs foreground feature, while the negative similarity matrix is generated by multiplying both foreground and background feature. To maximize the self-similarity distance, we define the positive similarity loss as:

$$l_{pos} = -log \sum_{i=0}^{K} exp(\frac{M_F}{\theta}). \tag{10}$$

For negative similarity loss, we formulate it as:

$$l_{neg} = -log \frac{1}{1 + \frac{\sum_{i=0}^{K} exp(\frac{M_B}{\theta})}{\sum_{i=0}^{K} exp(\frac{M_F}{\theta})}} \tag{11}$$

Where θ represents the temperature coefficient and K represents the number of feature maps utilized to calculate the similarity. Finally, the similarity interaction loss is defined as:

$$L_{sim_l} = L_{neg} + \lambda \cdot L_{pos}. \tag{12}$$

Where λ is a balance factor. Overall, we consider weighted cross entropy and weighted IoU loss as $L = L_{Iou}^W + L_{BCE}^W$ for the prediction map F_{coa}. Alongside the similarity loss, we define the final loss as:

$$L_{final} = \sum_{i=1}^{i=5} L(C_i) + L_{sim_g} + L_{sim_l}. \tag{13}$$

4. Experiments

4.1. Experiment setup

Datasets. We use existing COD datasets: CAMO [37], CHAMELEON [38], COD10K [5] and NC4K [39]. CHAMELEON consists of 76 images, each of which has a corresponding hand-annotated pixel-level ground truth. CAMO contains 1250 camouflaged images and 1250 non-camouflaged images. COD10K is the largest dataset with higher image quality, including 5066 camouflaged images, 3000 background images and 1934 non-camouflaged images. NC4K is another large-scale COD test dataset, including 4121 images. According to the data partition [5,6,39], we use 4040 camouflage images constructed by CAMO and COD10K as the training dataset.

Evaluation Metrics. We choose common evaluation metrics: mean absolute error (MAE) is used to evaluate the pixel-level accuracy between the predicted image and GT, the weighted F-measure (F_β^w) [40] is used to provide different weights for errors in different positions, the S-measure (S_m) [41] evaluates the model from the structural integrity and E-measure (E_m) [42] is used to consider both global and local information.

Implementation Details. During training, we use Res2Net-50 [43] as the backbone network, the batch size is set to 36, and the learning rate is initially set to $1e^{-4}$, dividing by 10 every 30 epochs. We set $\theta = 0.07$ and $\lambda = 0.01$, and set the unified channel number in the GC to 32. During both the image preprocessing stage and the inference stage, the input resolution is 352×352. The entire model is trained on NVIDIA TITAN RTX GPU for 100 epochs.

4.2. Performance

We demonstrate the effectiveness of our method by comparing with 12 state-of-the-art methods, including segmentation methods: (1) UNet++ [29] utilizes feature fusion and path aggregation mechanisms; (2) PraNet [1] uses parallel back attention to establish relationships between regions and boundary cues. Salient object detection methods include: (1) PiCANet [30] integrates global context with multi-scale local context; (2) CPD [32] encodes context using multiscale receptive fields. Camouflaged object detection methods include: (1) TANet [35] enhances subtle texture differences with multiple texture-aware refinement modules; (2) ERRNet [12] establishes edge priors and cross-comparisons between potential camouflaged regions and the background. In addition, in order to prove the effectiveness of the proposed SSCM, we add this module to four methods respectively for verification: (1) SINet [5] comprises a Search Module and an Identification Module; (2) BGNet [22] explores valuable object-related edge semantics to guide representation learning; (3) ZoomNet [8] is a zoom strategy to learn the discriminative mixed-scale semantics; (4) LSR [36] is a triple-task learning framework to simultaneously localize, segment, and rank camouflaged objects.

Quantitative Evaluation. Table 1 presents the quantitative results of our method in comparison to 12 state-of-the-art methods on four datasets. Our network consistently outperforms other models across evaluation metrics and datasets. For instance, when compared with ERRNet [12] and TANet [35], our method exhibits approximately 4.5% and 13.3% improvements in F_β^w and MAE on the COD10K dataset, and about 4.5% and 7.3% improvements on the CAMO dataset. Furthermore, SSCM contributes to performance enhancements in several methods. When added to SINet, SSCM leads to approximately 8.0% and 11.8% improvements in F_β^w and MAE on the COD10K dataset. Similarly, when incorporated into LSR, SSCM results in approximately 2.8% and 8.1% improvements on the COD10K dataset. These findings underscore the effectiveness of SSCM. Through the experiments, we have observed that our method consistently delivers high detection performance, with improvements across these datasets.

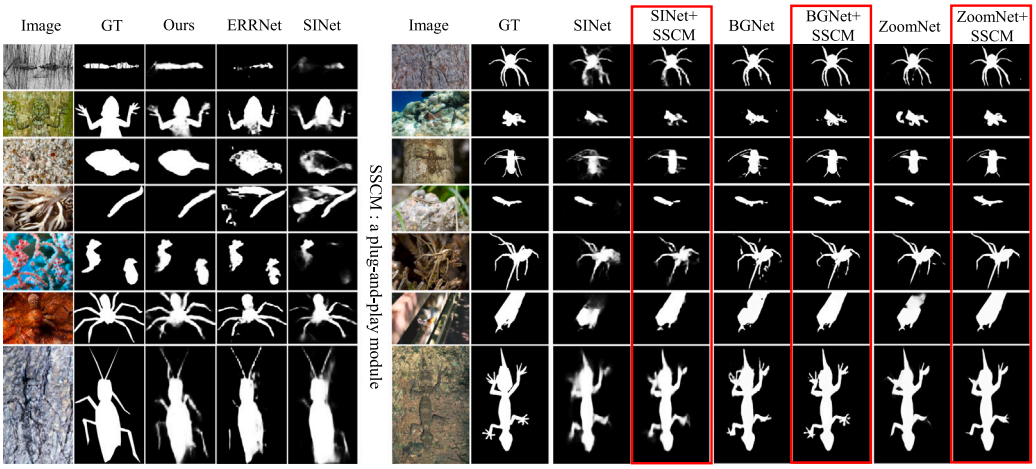

Fig. 5. Qualitative results of our DSNet and other representative methods.

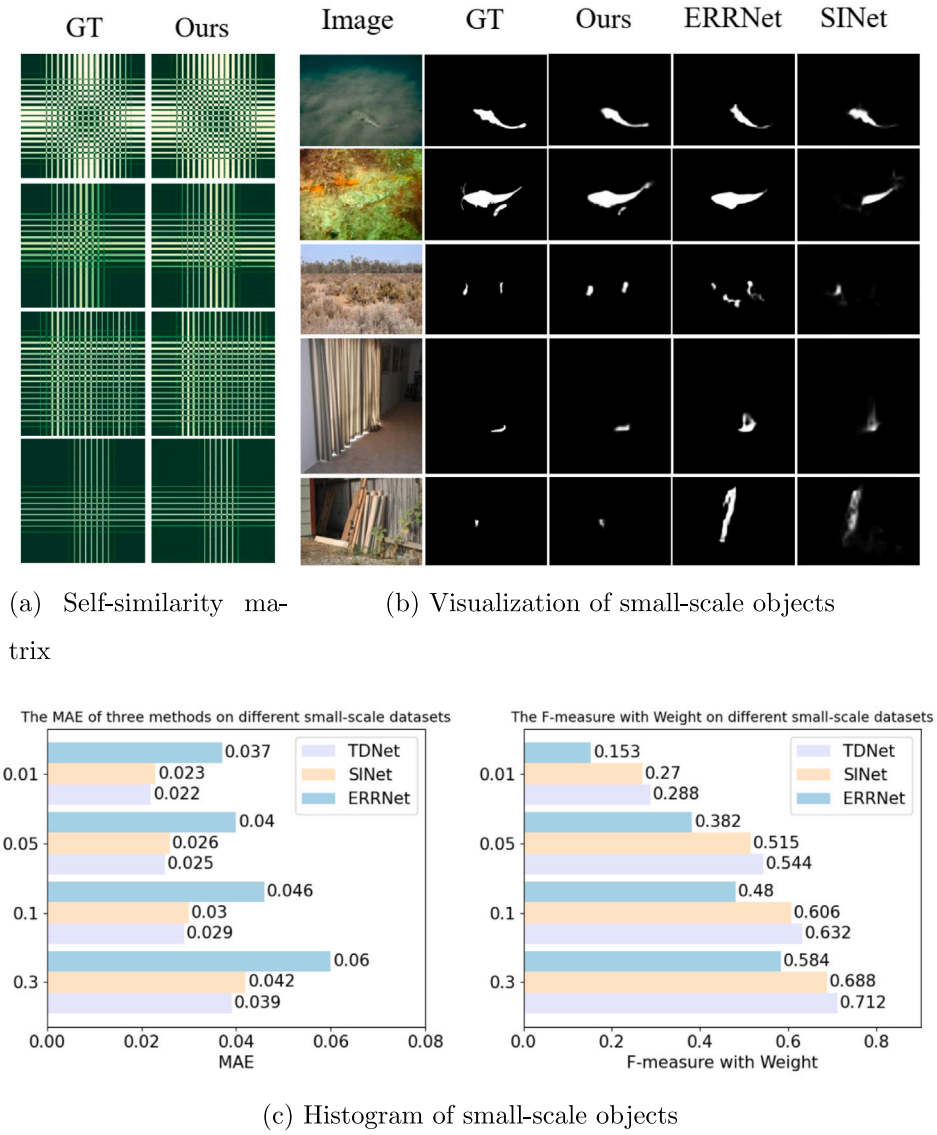

Fig. 6. Results of our DSNet and other methods for small camouflaged object methods. Including the self-similarity matrix between GT and fine feature map (a), the prediction map of small objects (b), and the histogram statistics of MAE and F_{β}^{w} indicators in different small-scale object datasets.

Table 1
Quantitative comparison of evaluation results of different models on four datasets. The best model results will be bolded. In the part added by SSCM alone, bold indicates the improvement of the effect. ↑ means the higher the better and ↓ means the lower the better.

Method	CHAMELEON				CAMO				COD10K				NC4K			
	S_m ↑	E_m ↑	F_β^w ↑	MAE ↓	S_m ↑	E_m ↑	F_β^w ↑	MAE ↓	S_m ↑	E_m ↑	F_β^w ↑	MAE ↓	S_m ↑	E_m ↑	F_β^w ↑	MAE ↓
FPN [27]	0.794	0.783	0.590	0.075	0.684	0.677	0.483	0.131	0.697	0.691	0.411	0.075	–	–	–	–
PSPNet [28]	0.773	0.758	0.555	0.085	0.663	0.659	0.455	0.139	0.678	0.680	0.377	0.080	–	–	–	–
UNet++ [29]	0.695	0.762	0.501	0.094	0.599	0.653	0.392	0.149	0.623	0.672	0.350	0.086	–	–	–	–
PCANet [30]	0.769	0.749	0.536	0.085	0.609	0.584	0.356	0.156	0.649	0.643	0.322	0.090	0.758	0.835	0.570	0.088
PFANet [31]	0.679	0.648	0.378	0.144	0.659	0.622	0.391	0.172	0.636	0.618	0.286	0.128	–	–	–	–
CPD [32]	0.853	0.866	0.706	0.052	0.726	0.729	0.550	0.115	0.747	0.770	0.508	0.059	0.787	0.866	0.645	0.072
HTC [33]	0.517	0.489	0.204	0.129	0.476	0.442	0.174	0.172	0.548	0.520	0.221	0.088	–	–	–	–
EGNet [34]	0.848	0.870	0.702	0.050	0.732	0.768	0.583	0.104	0.737	0.779	0.509	0.056	0.777	0.864	0.639	0.075
PraNet [1]	0.860	0.907	0.763	0.044	0.769	0.824	0.663	0.094	0.789	0.861	0.629	0.045	0.822	0.888	0.724	0.059
SINet [5]	0.869	0.891	0.740	0.044	0.751	0.771	0.606	0.100	0.771	0.806	0.551	0.051	0.808	0.883	0.723	0.058
TANet [35]	**0.888**	0.911	0.786	0.036	0.793	0.834	0.690	0.083	0.803	0.848	0.629	0.041	–	–	–	–
ERRNet [12]	0.877	0.927	**0.805**	0.036	0.761	0.817	0.660	0.088	0.780	0.867	0.629	0.044	0.764	0.833	0.697[a]	0.071
Ours	0.877	**0.930**	0.787	**0.035**	**0.817**	**0.870**	**0.726**	**0.073**	**0.809**	**0.878**	**0.657**	**0.038**	**0.843**	**0.894**	**0.753**	**0.050**
Evaluating methods with SSCM.																
SINet [5]	0.869	0.891	0.740	0.044	0.751	0.771	0.606	0.100	0.771	0.806	0.551	0.051	0.808	0.883	0.723	0.058
w/ SSCM	**0.877**	**0.916**	**0.787**	**0.037**	0.745	**0.776**	**0.623**	**0.097**	**0.774**	**0.829**	**0.595**	**0.045**	**0.811**	0.856	0.703	0.060
ZoomNet [8]	0.902	0.958	0.845	0.023	0.820	0.892	0.752	0.066	0.838	0.911	0.729	0.029	0.853	0.912	0.784	0.043
w/ SSCM	**0.910**	0.951	**0.863**	**0.022**	0.816	0.869	**0.756**	0.068	**0.841**	0.891	**0.737**	**0.028**	**0.856**	0.900	**0.795**	**0.041**
BGNet [22]	–	–	–	-	0.812	0.870	0.749	0.073	0.831	0.901	0.722	0.033	0.851	0.907	0.788	0.044
w/ SSCM	**0.900**	**0.948**	**0.862**	**0.027**	**0.814**	**0.875**	**0.757**	**0.069**	0.829	0.898	**0.728**	**0.032**	0.847	0.903	**0.789**	0.045
LSR [36]	0.878	0.929	0.828[a]	0.034	0.789	0.840	0.751[a]	0.079	0.805	0.880	0.711[a]	0.037	0.840	0.896	0.801[a]	0.048
w/ SSCM	**0.887**	**0.940**	**0.836**[a]	**0.029**	**0.803**	**0.853**	**0.763**[a]	**0.076**	**0.818**	**0.888**	**0.730**[a]	**0.034**	**0.847**	**0.910**	**0.808**[a]	**0.046**

[a] Indicate the use of the evaluation index F_m instead of F_β^w.

Qualitative Evaluation. We visually compare the results of our model and others across various scenarios, as depicted in Fig. 5. Our model's final localization closely aligns with the GT. Whether it involves multiple objects (row 5), large objects (row 2 and row 3), occluded objects (row 1), or objects with multiple legs (row 6 and row 7), DSNet exhibits robust detection capabilities. Notably, it excels in recognizing the finer details and accuracy of legs in multi-legged objects. In addition, to validate the efficacy of our proposed SSCM in enhancing the detection for edges, we compare the visualization results of three models of SINet, BGNet and ZoomNet before and after incorporating SSCM. It is evident that all methods benefit from improved edge extraction upon the SSCM. The results from the models after integrating SSCM are highlighted within a red box. This highlights that SSCM enhances positioning accuracy (rows 1, 3, 5, and 7), effectively maximizing the self-similarity distance between the foreground and background (rows 2, 4, and 6).

To assess the effectiveness of the DFFM for small objects, we have visualized various scenarios involving small objects, as depicted in Fig. 6(b). In the second row, our model stands out as the sole successful detector of small-scale camouflage objects amid a cluster of other objects. In the third row, the model exhibits remarkable accuracy in detecting multiple small objects. Clearly, our method significantly enhances small-scale object detection. Additionally, we have curated test datasets for small-scale objects by selecting images from four datasets and calculating the proportion of foreground in each image. Histograms of MAE and F_β^w for different methods are presented in Fig. 6(c), with the horizontal axis representing small datasets constructed with proportions of 0.3, 0.1, 0.03, and 0.01. In these histograms, our method consistently achieves the lowest MAE and the highest F_β^w in various datasets comprising small-scale objects. Furthermore, we have visualized the similarity matrix between GT and the prediction map in Fig. 6(a). The high degree of similarity between them provides evidence of the effectiveness of SSCM.

4.3. Ablation studies

In this section, we conduct ablation experiments on each component of DSNet to assess their individual contribution and necessity. We also examine the dilation rate selection in SRF and evaluate the effect of block in SSCM, across CAMO, COD10K, and NC4K datasets.

The effect of different modules. In our model, both DFFM and SSCM play pivotal roles, as illustrated in Table 2. We have observed a significant performance decline when we removed DFFM. This effect can be demonstrated among all dataset, especially on the COD10K dataset, where small objects make up a large proportion. The absence of DFFM hinder the extraction of crucial context information. Furthermore, the integration of SSCM resulted in notable improvements of approximately 2.0% and 6.4% in F_β^w and MAE on the CAMO dataset, respectively. When comparing experiment 5 to experiment 6, it is evident that the constraint on the overall self-similarity of the object holds greater significance. This is attributed to the object as a whole containing more similarity information, thus exerting a more substantial impact on the model's performance. In qualitative experiments, we have visualized the effects of integrating different modules (Fig. 7). Without DFFM, the model often misses objects (row 2), indicating a significant decrease in overall object information understanding. When detecting small-scale objects, the absence of SSCM leads to false detections due to difficulty distinguishing subtle background differences (row 3). Removing SSCM, IIM, or DFFM individually causes background clutter detection (row 4), proving the necessity of these modules for accurate object detection.

The effect of dual branch in DFFM. To further validate the performance of the DFFM, we conduct detailed ablation experiments on the SRF and MF components, as shown in Table 3. The experiments demonstrate significant performance improvements when using SRF or MF individually. For instance, using SRF, the F_β^w on COD10K improves from 0.596 to 0.651, and with MF, it increases to 0.652. Combining SRF and MF yields the best model performance. These experiments further underscore the importance of SRF and MF in the DFFM.

The effect of DFFM on large-scale and small-scale objects. In our study of large-scale and small-scale objects, we conduct quantitative and qualitative experiments on the SRF and MF branches. Quantitative experiments on large-scale and small-scale objects are detailed in Table 4. Specifically, objects with an area ratio above 40% in CAMO, COD10K, and NC4K datasets are defined as large-scale, while those below 5% are considered small-scale. The results indicate that SRF outperforms MF in detecting large-scale objects, with S_m and E_m reaching 0.811 and 0.832, respectively, while MF only achieves 0.805

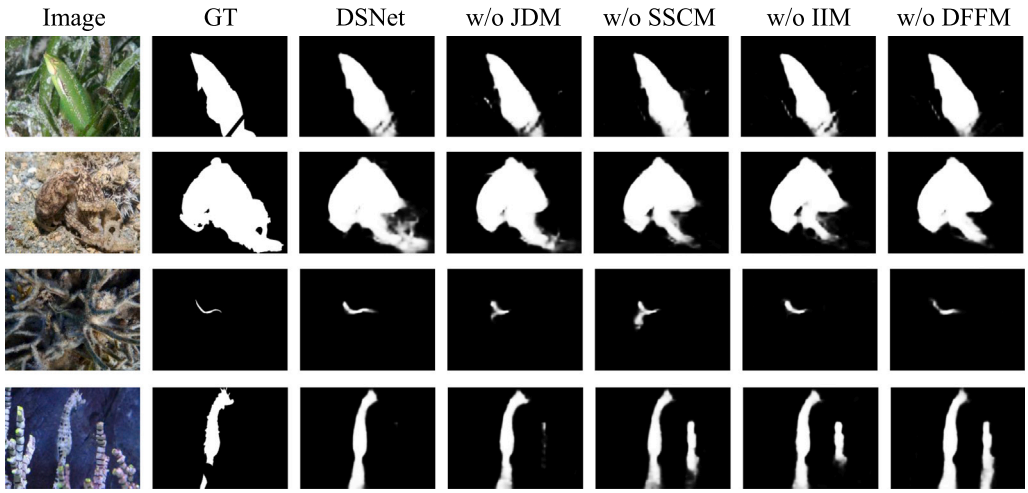

Fig. 7. Qualitative results of integrating different modules.

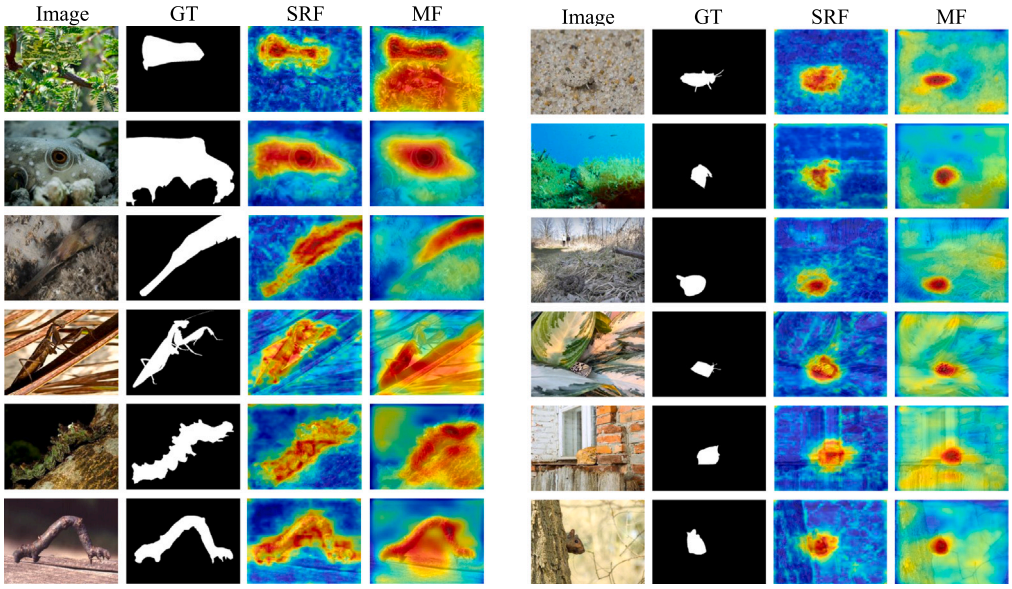

(a) Feature heatmap on large-scale objects (b) Feature heatmap on small-scale objects

Fig. 8. Feature map visualizations of camouflaged objects in SRF and MF, including visualizations for large-scale objects (a) and small-scale objects (b).

Table 2
Ablation analyses of each component on the CAMO, COD10K and NC4K datasets. Bold: top 1 results.

No.	JDM	IIM	DFFM	SSCM		CAMO		COD10K		NC4K	
				GC	MC	$F_\beta^w \uparrow$	MAE ↓	$F_\beta^w \uparrow$	MAE ↓	$F_\beta^w \uparrow$	MAE ↓
#1	✓	✓		✓	✓	0.691	0.078	0.596	0.043	0.702	0.056
#2		✓	✓	✓	✓	0.725	0.075	**0.660**	**0.038**	0.750	0.051
#3	✓		✓	✓	✓	0.723	0.075	0.645	0.040	0.739	0.054
#4	✓	✓	✓			0.713	0.078	0.657	0.040	0.752	0.051
#5	✓	✓	✓		✓	0.720	0.074	0.656	**0.038**	0.750	0.051
#6	✓	✓	✓	✓		**0.726**	0.075	0.655	0.039	0.749	0.051
#7	✓	✓	✓	✓	✓	**0.726**	**0.073**	0.657	**0.038**	**0.753**	**0.050**

and 0.825. Conversely, MF significantly outperforms SRF in detecting small-scale objects, with MF achieving 0.845 in E_m, compared to the 0.835 of SRF. In qualitative experiments, we visualize feature heatmaps from SRF and MF. Fig. 8(a) demonstrates SRF's ability to capture precise contours of large-scale objects, while MF tends to focus on local features, as seen in the second row where SRF emphasizes overall contours and MF highlights specific positions like the head. In Fig. 8(b), MF shows superior accuracy in pinpointing small-scale object positions, while SRF outlines broader areas. Through quantitative and qualitative experiments, we conclusively demonstrate that SRF is more effective for detecting large-scale objects, while MF excels in detecting small-scale objects.

The effect of different dilation rates in SRF. We conduct ablation experiments on the dilation rate applied in a single dilated convolutional layer within the SRF module. Since the SRF module primarily targets large-scale camouflaged objects, a larger dilation rate is deemed more

Table 3
Performance comparison of ablation experiments on CAMO, COD10K and NC4K datasets for SRF and MF. Bold: top 1 results.

No.	SRF	MF	CAMO		COD10K		NC4K	
			$F_\beta^w \uparrow$	MAE ↓	$F_\beta^w \uparrow$	MAE ↓	$F_\beta^w \uparrow$	MAE ↓
#1			0.691	0.078	0.596	0.043	0.702	0.056
#2	✓		0.713	0.076	0.651	0.039	0.748	**0.050**
#3		✓	0.716	0.075	0.652	0.040	0.748	0.051
#4	✓	✓	**0.726**	**0.073**	**0.657**	**0.038**	**0.753**	**0.050**

Table 4
Ablation analyses on SRF and MF for large-scale and small-scale objects. Bold: top 1 results.

Method	Large-scale				Small-scale			
	$S_m \uparrow$	$E_m \uparrow$	$F_\beta^w \uparrow$	MAE ↓	$S_m \uparrow$	$E_m \uparrow$	$F_\beta^w \uparrow$	MAE ↓
SRF	**0.811**	**0.832**	**0.812**	**0.124**	0.761	0.835	0.533	0.025
MF	0.805	0.825	0.808	0.127	**0.766**	**0.845**	**0.546**	**0.024**

Table 5
Performance comparison of ablation experiments on CAMO, COD10K and NC4K datasets for different dilation rates of SRF. Bold: top 1 results.

No.	k	CAMO		COD10K		NC4K	
		$F_\beta^w \uparrow$	MAE ↓	$F_\beta^w \uparrow$	MAE ↓	$F_\beta^w \uparrow$	MAE ↓
#1	3	0.719	0.076	0.654	0.039	0.748	0.051
#2	6	0.713	0.077	**0.658**	0.039	0.747	0.051
#3	12	0.712	0.077	0.654	0.039	0.747	0.051
#4	24	0.718	0.074	0.657	0.039	0.750	**0.050**
#5	18	**0.726**	**0.073**	0.657	**0.038**	**0.753**	**0.050**

Table 6
Performance comparison of different feature combination of JDM on CAMO, COD10K and NC4K datasets. Bold: top 1 results.

No.	f_1, f_1^*	f_2, f_2^*	f_3, f_3^*	CAMO		COD10K		NC4K	
				$F_\beta^w \uparrow$	MAE ↓	$F_\beta^w \uparrow$	MAE ↓	$F_\beta^w \uparrow$	MAE ↓
#1	✓			0.716	0.077	0.647	0.040	0.743	0.051
#2	✓	✓		0.721	0.075	0.652	0.039	0.746	0.052
#3	✓	✓	✓	**0.726**	**0.073**	**0.657**	**0.038**	**0.753**	**0.050**

Table 7
Performance comparison of the number of feature groups in IIM on CAMO, COD10K and NC4K datasets. Bold: top 1 results.

No.	Group	CAMO		COD10K		NC4K	
		$F_\beta^w \uparrow$	MAE ↓	$F_\beta^w \uparrow$	MAE ↓	$F_\beta^w \uparrow$	MAE ↓
#1	1	0.723	0.075	0.645	0.040	0.739	0.054
#2	2	**0.726**	**0.073**	**0.657**	**0.038**	**0.753**	**0.050**
#3	3	0.714	0.078	0.656	0.039	0.750	**0.050**
#4	4	0.714	0.074	0.656	0.039	0.747	0.051

Table 8
Ablation is performed for different number of blocks in the self-similarity constrained module. The first number in the second column indicates the number of blocks in GC, and the second number indicates the number of blocks in MC. Bold: top 1 results.

No.	N	CAMO		COD10K		NC4K	
		$F_\beta^w \uparrow$	MAE ↓	$F_\beta^w \uparrow$	MAE ↓	$F_\beta^w \uparrow$	MAE ↓
#1	11+11	0.724	**0.073**	0.633	0.041	0.735	0.052
#2	11+22	0.710	0.077	0.644	0.039	0.739	0.052
#3	22+22	0.723	0.074	0.651	0.039	0.746	0.051
#4	22+11	**0.726**	**0.073**	**0.657**	**0.038**	**0.753**	**0.050**

suitable. Table 5 verifies our thoughts. Throughout the experiments, we have observed that as the dilation rate increasing, the model's performance is initially improved and then declined (experiments 3, 4, and 5). This phenomenon occurs because an excessively large dilation rate results in the omission of significant information, causing a sharp decline in model performance. Conversely, a dilation rate that is too small to capture sufficiently global information.

The effect of fusion strategy in JDM. To validate the performance of JDM, we conduct integration experiments with different combinations of features, as shown in Table 6. In Table 6, we explore the performance of different feature combination strategies within JDM. The experiments indicate that combining f_1, f_2, f_1^* and f_2^* improves model performance compared to using only f_1 and f_1^*; for example, the F_β^w on CAMO increases from 0.716 to 0.721. The model achieves optimal performance when combining three sets of features, with F_β^w of 0.657 on COD10K. The results indicate that feature aggregation further enhances the performance of JDM, demonstrating the effectiveness of this approach.

The effect of different grouping strategy in IIM. To validate the performance of the feature grouping strategy in IIM, we conduct ablation experiments on the number of feature groups, as shown in Table 7. Experimental results show that the model performs best when the number of groups is set to 2, achieving F_β^w of 0.726 on the CAMO dataset. However, as the number of groups increases, the model's performance gradually declines; for instance, with 3 groups, the F_β^w decreases to 0.714. This decline may be attributed to compromised global interaction among feature channels with increasing group numbers. Therefore, we utilize the setting of 2 groups.

The effect of block selection in SSCM. We conducted ablation experiments on the number of blocks used in the self-similarity constraint module, as shown in Table 8. We limite our consideration to 11 and 22 blocks due to the substantial increase in parameters associated with a larger number of blocks. Our findings indicate that using 11 blocks in MC yields better performance. This is because a smaller number of blocks results in more information contained within each block. Given that the internal self-similarity of the object exhibits a block phenomenon, a larger block size facilitates the extraction of self-similarity information needed to distinguish between the foreground and background. Conversely, in GC, a larger number of blocks are required to enhance accuracy and provide finer details. Experiment 4 affirmed the effectiveness of our setting for blocks.

5. Conclusion

In this paper, we delve into the self-similarity of camouflaged objects, drawing inspiration from how humans observe these objects from various angles, perceiving the whole from the parts. Based on this insight, we introduce DSNet which consists of three modules named DFFM, JDM and SSCM. The DFFM integrates features from different branches, capturing information from various angles, thereby enhancing context information crucial for detecting small-scale camouflaged objects. Additionally, the JDM comprehensively decodes the features obtained from both branches. Furthermore, the SSCM reduces the self-similarity distance within the foreground while maximizing the self-similarity distance between the foreground and background through global constraints. Extensive experiments consistently demonstrate the superior performance of our method, surpassing prior approaches. Moreover, we illustrate the effectiveness of the SSCM when integrated into various methods as a plug-and-play tool. However, our method has certain limitations, such as difficulty in achieving accurate detection results for occluded camouflaged objects, which is more prevalent with large-scale objects. In future work, we will continue to improve multi-angle feature fusion and self-similarity metrics in occluded scenarios.

CRediT authorship contribution statement

Haozhe Yang: Investigation, Methodology, Validation, Visualization, Writing – original draft, Writing – review & editing. **Yuan Zhu:** Investigation, Methodology, Supervision, Validation, Visualization, Writing – original draft. **Ke Sun:** Methodology, Supervision, Writing – review & editing. **Haoyang Ding:** Validation, Visualization. **Xianming Lin:** Data curation, Supervision, Writing – review & editing.

Declaration of competing interest

The authors declare that they have no known competing financial interests or personal relationships that could have appeared to influence the work reported in this paper.

Data availability

The data that has been used is confidential.

Acknowledgments

This work is supported by National Key R&D Program of China (No. 2022ZD0118202), the National Science Fund for Distinguished Young Scholars (No. 62025603), the National Natural Science Foundation of China (No. U21B2037, No. U22B2051, No. 62176222, No. 62176223, No. 62176226, No. 62072386, No. 62072387, No. 62072389, No. 62002305 and No. 62272401), and the Natural Science Foundation of Fujian Province of China (No. 2021J01002, No. 2022J06001).

References

[1] D.-P. Fan, G.-P. Ji, T. Zhou, G. Chen, H. Fu, J. Shen, L. Shao, Pranet: Parallel reverse attention network for polyp segmentation, in: Medical Image Computing and Computer Assisted Intervention–MICCAI 2020: 23rd International Conference, Lima, Peru, October 4–8, 2020, Proceedings, Part VI 23, Springer, 2020, pp. 263–273.

[2] D.-P. Fan, T. Zhou, G.-P. Ji, Y. Zhou, G. Chen, H. Fu, J. Shen, L. Shao, Inf-net: Automatic covid-19 lung infection segmentation from ct images, IEEE Trans. Med. Imaging 39 (8) (2020) 2626–2637.

[3] R. Pérez-de la Fuente, X. Delclòs, E. Peñalver, M. Speranza, J. Wierzchos, C. Ascaso, M.S. Engel, Early evolution and ecology of camouflage in insects, Proc. Natl. Acad. Sci. 109 (52) (2012) 21414–21419.

[4] H.-K. Chu, W.-H. Hsu, N.J. Mitra, D. Cohen-Or, T.-T. Wong, T.-Y. Lee, Camouflage images, ACM Trans. Graph. 29 (4) (2010) 51.

[5] D.-P. Fan, G.-P. Ji, G. Sun, M.-M. Cheng, J. Shen, L. Shao, Camouflaged object detection, in: Proceedings of the IEEE/CVF Conference on Computer Vision and Pattern Recognition, 2020, pp. 2777–2787.

[6] H. Mei, G.-P. Ji, Z. Wei, X. Yang, X. Wei, D.-P. Fan, Camouflaged object segmentation with distraction mining, in: Proceedings of the IEEE/CVF Conference on Computer Vision and Pattern Recognition, 2021, pp. 8772–8781.

[7] J. Yan, T.-N. Le, K.-D. Nguyen, M.-T. Tran, T.-T. Do, T.V. Nguyen, Mirrornet: Bio-inspired camouflaged object segmentation, IEEE Access 9 (2021) 43290–43300.

[8] Y. Pang, X. Zhao, T.-Z. Xiang, L. Zhang, H. Lu, Zoom in and out: A mixed-scale triplet network for camouflaged object detection, in: Proceedings of the IEEE/CVF Conference on Computer Vision and Pattern Recognition, 2022, pp. 2160–2170.

[9] D. Zheng, X. Zheng, L.T. Yang, Y. Gao, C. Zhu, Y. Ruan, MFFN: Multi-view feature fusion network for camouflaged object detection, in: Proceedings of the IEEE/CVF Winter Conference on Applications of Computer Vision, 2023, pp. 6232–6242.

[10] T. Chen, J. Xiao, X. Hu, G. Zhang, S. Wang, Boundary-guided network for camouflaged object detection, Knowl.-Based Syst. 248 (2022) 108901.

[11] T. Zhou, Y. Zhou, C. Gong, J. Yang, Y. Zhang, Feature aggregation and propagation network for camouflaged object detection, IEEE Trans. Image Process. 31 (2022) 7036–7047.

[12] G.-P. Ji, L. Zhu, M. Zhuge, K. Fu, Fast camouflaged object detection via edge-based reversible re-calibration network, Pattern Recognit. 123 (2022) 108414.

[13] X. Zhang, C. Zhu, S. Wang, Y. Liu, M. Ye, A Bayesian approach to camouflaged moving object detection, IEEE Trans. Circuits Syst. Video Technol. 27 (9) (2016) 2001–2013.

[14] S. Li, D. Florencio, W. Li, Y. Zhao, C. Cook, A fusion framework for camouflaged moving foreground detection in the wavelet domain, IEEE Trans. Image Process. 27 (8) (2018) 3918–3930.

[15] D.-P. Fan, G.-P. Ji, M.-M. Cheng, L. Shao, Concealed object detection, IEEE Trans. Pattern Anal. Mach. Intell. 44 (10) (2021) 6024–6042.

[16] M. Zhuge, X. Lu, Y. Guo, Z. Cai, S. Chen, CubeNet: X-shape connection for camouflaged object detection, Pattern Recognit. 127 (2022) 108644.

[17] Y. Liu, K. Zhang, Y. Zhao, H. Chen, Q. Liu, Bi-RRNet: Bi-level recurrent refinement network for camouflaged object detection, Pattern Recognit. 139 (2023) 109514.

[18] Z. Chen, K. Sun, X. Lin, CamoDiffusion: Camouflaged object detection via conditional diffusion models, in: Proceedings of the AAAI Conference on Artificial Intelligence, Vol. 38, 2024, pp. 1272–1280.

[19] A. Li, J. Zhang, Y. Lv, B. Liu, T. Zhang, Y. Dai, Uncertainty-aware joint salient object and camouflaged object detection, in: Proceedings of the IEEE/CVF Conference on Computer Vision and Pattern Recognition, 2021, pp. 10071–10081.

[20] G.-P. Ji, D.-P. Fan, Y.-C. Chou, D. Dai, A. Liniger, L. Van Gool, Deep gradient learning for efficient camouflaged object detection, Mach. Intell. Res. 20 (1) (2023) 92–108.

[21] Q. Zhai, X. Li, F. Yang, C. Chen, H. Cheng, D.-P. Fan, Mutual graph learning for camouflaged object detection, in: Proceedings of the IEEE/CVF Conference on Computer Vision and Pattern Recognition, 2021, pp. 12997–13007.

[22] Y. Sun, S. Wang, C. Chen, T.-Z. Xiang, Boundary-guided camouflaged object detection, 2022, arXiv preprint arXiv:2207.00794.

[23] H. Zhu, P. Li, H. Xie, X. Yan, D. Liang, D. Chen, M. Wei, J. Qin, I can find you! boundary-guided separated attention network for camouflaged object detection, in: Proceedings of the AAAI Conference on Artificial Intelligence, Vol. 36, 2022, pp. 3608–3616.

[24] J. Long, E. Shelhamer, T. Darrell, Fully convolutional networks for semantic segmentation, in: Proceedings of the IEEE Conference on Computer Vision and Pattern Recognition, 2015, pp. 3431–3440.

[25] Z. Li, F. Zhou, FSSD: feature fusion single shot multibox detector, 2017, arXiv preprint arXiv:1712.00960.

[26] X. Qin, Z. Zhang, C. Huang, C. Gao, M. Dehghan, M. Jagersand, Basnet: Boundary-aware salient object detection, in: Proceedings of the IEEE/CVF Conference on Computer Vision and Pattern Recognition, 2019, pp. 7479–7489.

[27] T.-Y. Lin, P. Dollár, R. Girshick, K. He, B. Hariharan, S. Belongie, Feature pyramid networks for object detection, in: Proceedings of the IEEE Conference on Computer Vision and Pattern Recognition, 2017, pp. 2117–2125.

[28] H. Zhao, J. Shi, X. Qi, X. Wang, J. Jia, Pyramid scene parsing network, in: Proceedings of the IEEE Conference on Computer Vision and Pattern Recognition, 2017, pp. 2881–2890.

[29] Z. Zhou, M.M. Rahman Siddiquee, N. Tajbakhsh, J. Liang, Unet++: A nested u-net architecture for medical image segmentation, in: Deep Learning in Medical Image Analysis and Multimodal Learning for Clinical Decision Support: 4th International Workshop, DLMIA 2018, and 8th International Workshop, ML-CDS 2018, Held in Conjunction with MICCAI 2018, Granada, Spain, September 20, 2018, Proceedings 4, Springer, 2018, pp. 3–11.

[30] N. Liu, J. Han, M.-H. Yang, Picanet: Learning pixel-wise contextual attention for saliency detection, in: Proceedings of the IEEE Conference on Computer Vision and Pattern Recognition, 2018, pp. 3089–3098.

[31] T. Zhao, X. Wu, Pyramid feature attention network for saliency detection, in: Proceedings of the IEEE/CVF Conference on Computer Vision and Pattern Recognition, 2019, pp. 3085–3094.

[32] Z. Wu, L. Su, Q. Huang, Cascaded partial decoder for fast and accurate salient object detection, in: Proceedings of the IEEE/CVF Conference on Computer Vision and Pattern Recognition, 2019, pp. 3907–3916.

[33] K. Chen, J. Pang, J. Wang, Y. Xiong, et al., Hybrid task cascade for instance segmentation, in: Proceedings of the IEEE/CVF Conference on Computer Vision and Pattern Recognition, 2019, pp. 4974–4983.

[34] J.-X. Zhao, J.-J. Liu, D.-P. Fan, Y. Cao, J. Yang, M.-M. Cheng, EGNet: Edge guidance network for salient object detection, in: Proceedings of the IEEE/CVF International Conference on Computer Vision, 2019, pp. 8779–8788.

[35] J. Ren, X. Hu, L. Zhu, X. Xu, Y. Xu, W. Wang, Z. Deng, P.-A. Heng, Deep texture-aware features for camouflaged object detection, IEEE Trans. Circuits Syst. Video Technol. (2021).

[36] Y. Lv, J. Zhang, Y. Dai, A. Li, N. Barnes, D.-P. Fan, Towards deeper understanding of camouflaged object detection, IEEE Trans. Circuits Syst. Video Technol. (2023).

[37] T.-N. Le, T.V. Nguyen, Z. Nie, M.-T. Tran, A. Sugimoto, Anabranch network for camouflaged object segmentation, Comput. Vis. Image Underst. 184 (2019) 45–56.

[38] P. Skurowski, H. Abdulameer, J. Błaszczyk, T. Depta, A. Kornacki, P. Kozieł, Animal camouflage analysis: Chameleon database, 2018, p. 7, Unpublished manuscript, 2 (6).

[39] Y. Lv, J. Zhang, Y. Dai, A. Li, B. Liu, N. Barnes, D.-P. Fan, Simultaneously localize, segment and rank the camouflaged objects, in: Proceedings of the IEEE/CVF Conference on Computer Vision and Pattern Recognition, 2021, pp. 11591–11601.

[40] R. Margolin, L. Zelnik-Manor, A. Tal, How to evaluate foreground maps? in: Proceedings of the IEEE Conference on Computer Vision and Pattern Recognition, 2014, pp. 248–255.

[41] D.-P. Fan, M.-M. Cheng, Y. Liu, T. Li, A. Borji, Structure-measure: A new way to evaluate foreground maps, in: Proceedings of the IEEE International Conference on Computer Vision, 2017, pp. 4548–4557.

[42] D.-P. Fan, C. Gong, Y. Cao, B. Ren, M.-M. Cheng, A. Borji, Enhanced-alignment measure for binary foreground map evaluation, 2018, arXiv preprint arXiv:1805.10421.

[43] S.-H. Gao, M.-M. Cheng, K. Zhao, X.-Y. Zhang, M.-H. Yang, P. Torr, Res2net: A new multi-scale backbone architecture, IEEE Trans. Pattern Anal. Mach. Intell. 43 (2) (2019) 652–662.

Haozhe Yang is currently pursuing his master's degree in Artificial Intelligence, School of Infomatics, Xiamen University, China. His research interests include computer vision and camouflaged object detection.

haozhe@stu.xmu.edu.cn.

Yuan Zhu received her master's degree from Department of Artificial Intelligence, School of Infomatics, Xiamen University, China, in 2023. Her research interests include computer vision and camouflaged object detection.

zhuyuan26zp@163.com.

Ke Sun is a second-year Ph.D. student at Xiamen University, affiliated with the Key Laboratory of Multimedia Trusted Perception and Efficient Computing, China. His interests lie in face forgery detection, continual learning, and multimodal learning.

skjack@stu.xmu.edu.cn.

Haoyang Ding is currently pursuing his master's degree in Artificial Intelligence, School of Informatics, Xiamen University, China. His research focus is primarily centered on computer vision and camouflaged object detection.

iamxiaoding@stu.xmu.edu.cn.

Xianming Lin is currently an Assistant Professor with Xiamen University, China. He received the Ph.D. degree in intelligent multimedia information processing from the School of Informatics, Xiamen University, China, in 2014. His research interest lies in visual retrieval.