Exercise 2

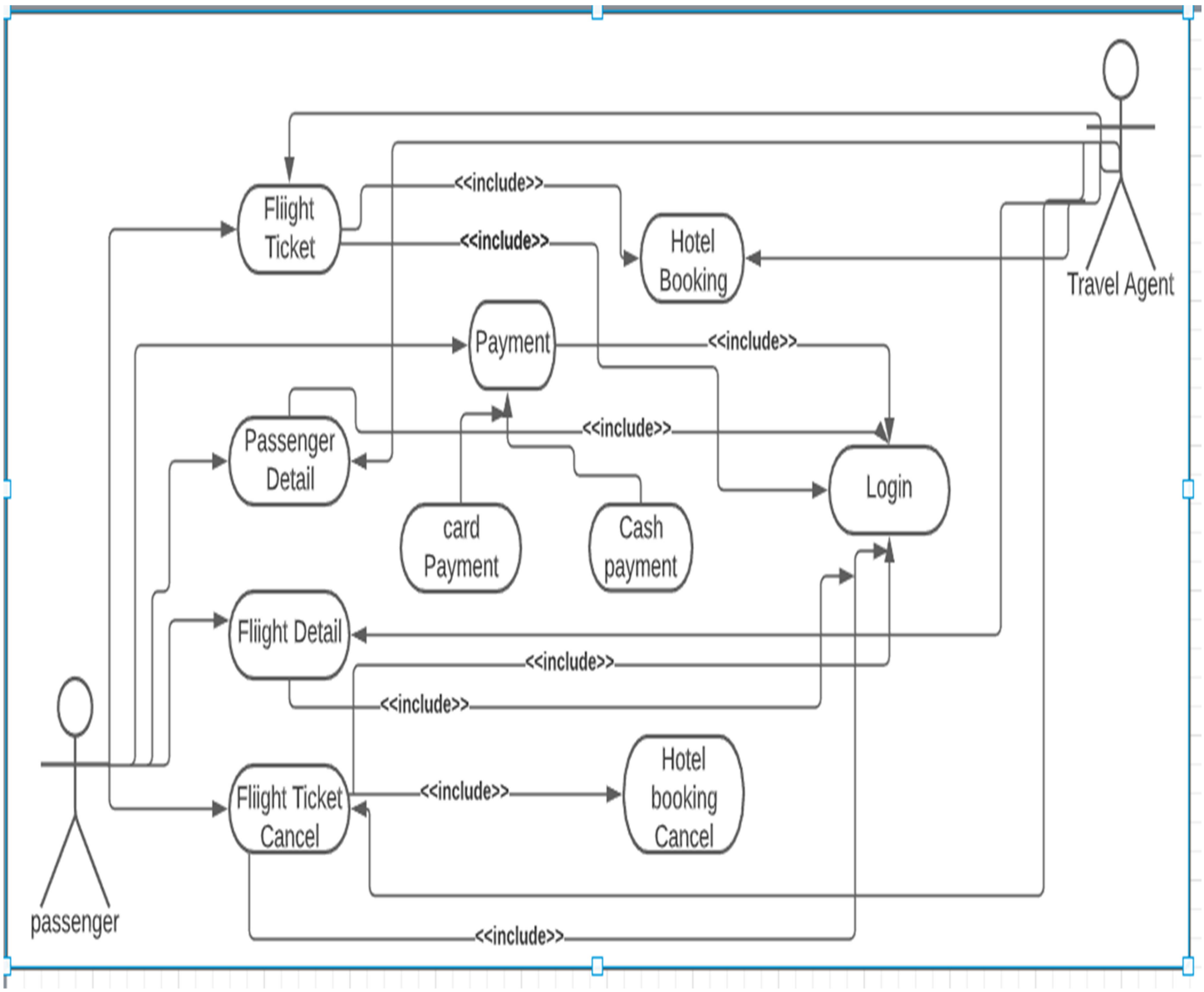
Fliight Ticket
<<include>>
<<include>>
Hotel Booking
Travel Agent
Payment
<<include>>
Passenger Detail
<<include>>
Login
card Payment
Cash payment
Fliight Detail
<<include>>
<<include>>
Hotel booking Cancel
Fliight Ticket Cancel
<<include>>
passenger
<<include>>