Technology in Society 79 (2024) 102733

Contents lists available at ScienceDirect

Technology in Society

journal homepage: www.elsevier.com/locate/techsoc

Analyzing AI adoption in European SMEs: A study of digital capabilities, innovation, and external environment

Marta F. Arroyabe [a], Carlos F.A. Arranz [b], Ignacio Fernandez De Arroyabe [c,d], Juan Carlos Fernandez de Arroyabe [a,*]

[a] Essex Business School. University of Essex, UK
[b] Greenwich Business School, University of Greenwich, UK
[c] Computer Science Department, Loughborough University, UK
[d] Data Services, Commercial Banking, Lloyds Banking Group, London, UK

ARTICLE INFO

Keywords:
Artificial intelligence
SMEs
Digital capabilities
Innovation capabilities
Business environmental support

ABSTRACT

This study investigates the effects of digital capabilities, innovation capabilities, and business environmental support on the adoption of Artificial Intelligence (AI) in Small and Medium-sized Enterprises (SMEs). Utilizing dynamic capabilities and resource dependency theories, we provide a comprehensive and integral analysis of the drivers that facilitate AI adoption in SMEs. We conducted an empirical study encompassing 12,108 SMEs, based on survey data of the Flash Eurobarometer database from the European Union. Our analysis employed a combination of classical regression methods and advanced machine learning techniques, including artificial neural networks and tree regression. Our findings highlight the importance of digital capabilities in driving AI adoption, where complementing innovation capabilities exhibit synergistic effects. Contrary to prevailing literature, business environmental support alone demonstrates limited impact, emphasizing its contingent effectiveness within a well-elaborated institutional framework. Furthermore, the synergy between business environmental support and digital and innovation capabilities has a significant impact on AI adoption in SMEs. However, internal capabilities exert a greater influence on AI adoption in SMEs compared to business environmental support. This study contributes to dynamic capabilities theory by elucidating the interplay of digital and innovation capabilities, offering a nuanced understanding of their combined influence on AI adoption. It also enriches resource dependency theory by highlighting the dynamic nature of business environmental support. For practitioners, our results underscore the need for a balanced investment in digital and innovation capabilities. Policymakers should consider these insights when designing support structures for SMEs, emphasizing a comprehensive approach to foster internal capabilities alongside creating an enabling external environment.

1. Introduction

Artificial intelligence (AI) has profoundly transformed the economy and society by offering innovative solutions [1–4]. In the economy, AI has optimized business processes, increased operational efficiency, and facilitated decision-making. Moreover, it has driven the creation of new specialized jobs and fostered technological innovation, thereby stimulating economic growth. In society, AI has enhanced healthcare, education, and security by providing precise medical diagnoses, personalizing education, and strengthening cybersecurity. Overall, artificial intelligence has emerged as a crucial engine for economic and social progress, shaping the future of our societies significantly [2,5–7].

In this context, businesses acknowledge the significance of AI [5]. Consequently, AI has emerged as a transformative force reshaping how businesses operate and interact with their customers. While larger corporations have organized the adoption of advanced AI technologies, small and medium-sized enterprises (SMEs) have struggled with the challenge of integrating these innovations into their daily operations (Almashawreh et al., 2023; [8,9]). These challenges include financial constraints [10], a lack of expertise and skills [8,11], resistance to change, and difficulties in integrating AI with existing systems [12]. Although the academic community has made substantial contributions

* Corresponding author.
E-mail addresses: mf17255@essex.ac.uk (M.F. Arroyabe), c.fernandezdearroyabearranz@greenwich.ac.uk (C.F.A. Arranz), I.Fernandez@lboro.ac.uk, ignacio.fernandez-de-arroyabe@lloydsbanking.com (I. Fernandez De Arroyabe), jcfern@essex.ac.uk (J.C. Fernandez de Arroyabe).

https://doi.org/10.1016/j.techsoc.2024.102733
Received 28 November 2023; Received in revised form 10 October 2024; Accepted 10 October 2024
Available online 28 October 2024
0160-791X/© 2024 The Authors. Published by Elsevier Ltd. This is an open access article under the CC BY license (http://creativecommons.org/licenses/by/4.0/).

to understanding these obstacles, the insights remain diverse, fragmented, and inconclusive about the dynamics of AI adoption within SMEs. Wang et al. [11] and Bhalerao et al. [12] note the critical importance of comprehending how SMEs are navigating this adoption journey, considering an integrative perspective that considers both internal organizational capabilities and external environmental influences. This approach is particularly critical for SMEs, given their limited resources and unique constraints.

Despite these calls for a more integrative perspective, there remains a pronounced gap in the literature concerning the complex nature of AI adoption in SMEs. Specifically, existing studies often overlook the synergies between digital and innovation capabilities and how these capabilities interact with external environmental factors ([13]; [14]; [15]). While individual factors such as digital and innovation capabilities have been studied in isolation [16,17], the synergistic effects of these capabilities and their interaction with external business environmental factors remain largely unexplored ([18]; Agostini et al., [19]). This gap in the literature may be attributed to the complexity of capturing multi-dimensional interactions in empirical research and a historical focus on larger organizations where internal capabilities were seen as sufficient to drive technological adoption ([20]; Vial, 2019). Our study aims to address this gap by providing an integrative analysis that not only identifies key drivers of AI adoption in SMEs but also reveals how these factors interact to shape adoption outcomes.

This study focuses on exploring the landscape of AI adoption by SMEs in the context of the European Union (EU). In particular, we aim to answer the research question: *How do digital capabilities, innovation capabilities, and business environmental* support *interact to facilitate the adoption of Artificial Intelligence (AI) in SMEs across the European Union?* To address our research question, we conducted an empirical study encompassing 12,108 SMEs. We collected data through a survey utilizing the Flash Eurobarometer No. 486 database from Eurostat, which belongs to the European Union (EU). The literature has highlighted the economic role of SMEs, especially in the case of the EU, where they represent more than 96 % of all businesses.

As a theoretical framework, we use resources dependency theory [21–24] and the dynamic capabilities theory [25,26]. Dynamic capabilities theory allows us to explore how SMEs internally develop and adapt their strategies to leverage AI effectively, while resource dependency theory offers insights into how external resources and environmental factors influence these adoption processes. Thus, we examine both the support provided by the European ecosystem to SMEs for AI adoption and the internal resources of SMEs. The literature has previously emphasized the importance of the ecosystem as a driver of innovations within organizations [27,28]. Furthermore, we integrate the resources dependency theory with dynamic capability to demonstrate how the possession of digital and innovation capabilities serve as a catalyst for AI adoption in companies. The literature highlights the pivotal role of organizational capabilities as essential drivers in the digital transformation of organizations [16,17,29]. Additionally, Arranz et al. [29] demonstrate that the interaction of capabilities within an organization can generate complementary and synergistic effects, arising from the sharing of organizational routines and resources.

From a methodological point of view, we combine regression analysis with machine learning, using artificial neural networks (ANNs) and tree regression in our modelling. This strategic combination of statistical methods offers several substantial advantages. On one hand, it enables us to explore causal relationships between variables, which is essential for understanding the underlying dynamics. Thus, to the explanatory power of regression models, we can add the capacity of ANNs in the analysis of complex problems, determining all interactions through learning algorithms. This allow us to solve previous limitations of regression models, providing a higher level of explained variance, which result in a better understanding and quantification of how various drivers affect the development of innovation [30,31]. On the other hand, tree regression analysis is a technique used in data mining and machine learning to construct predictive models. Tree model analysis provides numerous benefits, such as interpretability, as decision rules are presented clearly and intuitively. Moreover, tree models can handle both numerical and categorical data and automatically manage feature selection, rendering them suitable for various types of datasets.

Our study makes several contributions to the understanding of AI adoption in SMEs. Theoretically, we extend both dynamic capabilities theory and resource dependency theory by demonstrating how digital and innovation capabilities within SMEs interact with external business environmental support to drive AI adoption. We highlight the critical synergistic relationship between these internal and external factors, providing new insights into how SMEs leverage their internal adaptability alongside external resources to effectively integrate AI technologies. Additionally, we contribute methodologically by combining traditional regression analysis with machine learning techniques, offering a more comprehensive understanding of the complex, non-linear relationships that influence AI adoption.

2. Literature review

The adoption of AI by SMEs is a complex process influenced by both internal capabilities and external environmental factors. To fully capture this complexity, our research integrates dynamic capabilities theory and resource dependency theory as complementary frameworks. These theories, when combined, provide a holistic understanding of how SMEs navigate AI adoption.

On the one hand, dynamic capabilities theory emphasizes the importance of an organization's ability to sense, seize, and reconfigure its resources in response to technological advancements (Teece, 2007). This theory is crucial for understanding how SMEs develop and adapt their innovation capabilities, which enable them to continuously innovate and align their internal resources to take advantage of AI technologies. By fostering innovation, SMEs are better equipped to respond to technological changes and remain competitive in dynamic markets [25].

Resource dependency theory, on the other hand, focuses on how SMEs manage their external dependencies to secure critical resources required for AI adoption. Specifically, digital capabilities are supported by resource dependency theory because SMEs often rely on external technology providers, infrastructure support, and regulatory frameworks to build the technological foundation necessary for integrating AI into their operations (Pfeffer & Salancik, 1978). These digital capabilities, which include access to technological infrastructure, data management tools, and digital expertise, are often dependent on external resources and partnerships, emphasizing the reliance on external support for technological advancements [21].

By integrating these two theories, our model captures both the internal adaptability of SMEs through dynamic capabilities and the external dependencies they must manage through resource dependency theory. This synergy provides a more comprehensive view of AI adoption, demonstrating that internal innovation capabilities and external digital capabilities, supported by business environmental factors, are interdependent and must work together for successful AI integration. Our framework builds on studies that have highlighted the importance of blending internal and external perspectives for a richer understanding of organizational behavior and strategy (Karim & Mitchell, 2000; [32]).

2.1. Resources dependency theory and SMEs

Resource Dependency Theory is a theoretical framework that examines the relationships between organizations and their external environment, emphasizing the influence of resource interdependence. Developed by Pfeffer and Salancik [33], this theory posits that organizations depend on external resources for their survival and success. The core idea is that organizations seek to reduce uncertainty and increase their control over critical resources by forming strategic dependencies with external entities such as suppliers, customers, and regulatory

bodies [21–24]. In the context of SMEs, this theory has been applied to understand how these businesses rely on various external and internal factors for survival and development [34]. For example, a recent study by Badghish and Soomro [35] shows the significance of technological orientation and external support mechanisms in enhancing digital value creation through AI in SMEs. They argue that a supportive business environment, characterized by conducive governmental policies and market conditions, mediates the relationship between SMEs' technological orientation and their successful adoption of AI technologies. Several studies have explored the application of resources dependency theory in the SME, shedding light on the external dependencies SMEs face [34,36,37]. These external dependencies include access to financial resources, technological support, market access, and legal frameworks. SMEs often rely on established networks, government policies, and international collaborations to navigate these challenges. Research indicates that understanding and managing these external dependencies are critical for SMEs to remain competitive and sustainable in the global market. Furthermore, the literature highlights internal dependencies within SMEs, focusing on factors such as leadership, skills and capabilities, and organizational culture [17,37]. For instance, Sharma et al. [38] identified employee capability and financial support as key factors in AI adoption by SMEs. Effective internal management and innovation are identified as essential elements for SMEs to reduce their dependency on external factors. Studies suggest that SMEs need to develop internal resources and capabilities, foster a culture of innovation, and invest in human capital to mitigate their reliance on external resources. Hence, this theory provides a valuable lens to analyze the complex relationships and interdependencies faced by SMEs.

2.2. Dynamic capabilities theory: digital and innovation capabilities in SMEs

In addition to the resource dependency theory, we employ the dynamic capabilities theory [25,26]. Dynamic capabilities involve three key stages that enable firms to align their operations with high-yield activities: sensing, seizing, and reconfiguring (Teece, 2007).

The first stage, sensing, refers to the firm's ability to recognize and anticipate opportunities and threats in the external environment. This involves scanning for technological advancements, market shifts, and emerging trends, a crucial element for SMEs looking to adopt AI technologies effectively. The second stage, seizing, focuses on how firms respond to these opportunities by mobilizing their resources and taking action. This may involve investing in new digital tools, skills, or business models to leverage AI capabilities. Finally, the third stage, reconfiguring, entails the continuous realignment of the firm's resources and processes to maintain a competitive advantage. This might involve restructuring operations to integrate AI solutions more seamlessly or adopting new routines to ensure that AI technologies are utilized optimally.

Dynamic capabilities comprise a set of higher-level activities that enable firms to align their regular operations with high-yield endeavors [26]. Dynamic capabilities involve two crucial elements for attaining a competitive advantage: dynamism and capabilities. The term capabilities refers to an organization's efficiency in utilizing its resources to achieve specific outcomes or objectives [39–41]. Typically, capabilities represent a synthesis of competences, processes, technologies, and various resources. Evolving from competences, capabilities arise as organizations blend the expertise and knowledge of their workforce with other resources, facilitating the execution of specific activities or functions. Firms' capabilities are shaped by learning, organizational resources, and organizational histories [26,42]. Learning is an outcome of practice and experimentation, enabling tasks to be performed more effectively [26]. The term dynamic reflects the changing nature of the environment, emphasizing the role of innovation in a context where timing is critical [43]. Therefore, dynamic capabilities refer to a firm's ability to modify its capabilities, such as by developing new products, to adapt to changes in the external environment [44]. Dynamic capabilities encompass not only capabilities but also the processes and routines of firms [20]. Similarly, Teece et al. (2007) view dynamic capabilities as the firm's capacity to integrate and reconfigure capabilities to address rapidly changing environments.

As we have indicated, these are the two types of capabilities that we will utilize in our research. First, digital capabilities refer to an organization's proficiency and capacity to leverage digital technologies and resources effectively to achieve strategic objectives and stay competitive in the digital age [45–49]. These capabilities encompass a range of elements, including technological infrastructure, digital skills and competencies, data management, and the integration of digital tools and processes into various aspects of the business. Digital capabilities are crucial for organizations aiming to navigate the complexities of the digital landscape, capitalize on emerging opportunities, and address challenges related to technological advancements and evolving market demands. Second, innovation capabilities refer to an organization's ability to effectively and consistently create, develop, and implement new ideas, processes, products, or services [26,29,50]. These capabilities are critical for staying competitive in dynamic and rapidly changing business environments.

3. Hypotheses

To conceptualize the complex dynamics of AI adoption in SMEs, we propose a framework based on dynamic capabilities and resource dependency theories. Fig. 1 illustrates this model, reflecting the hypotheses we develop in this section.

3.1. Digital and innovation capabilities and their influence on AI adoption in SMEs

In our analysis, we have considered two types of internal resources within organizations, namely, digital and innovation capabilities. Examining how they impact AI adoption first necessitates identifying the individual effects of both capabilities. Subsequently, we analyze how they influence the adoption process, considering that these capabilities coexist within the organization and interact, potentially producing complementary effects [29].

In the context of Industry 4.0, companies are implementing digital technologies to transform production systems, work organization, and strategic decision-making [51]. The integration of digital technologies with production management systems is recognized as a crucial element for digital transformation (Bai et al., 2020; [52]). This integration enables increased efficiency and quality in manufacturing and supply chains by automating various aspects of production and manufacturing ([53]; [54]). In this context, Bharadwaj et al. [55], [56] and [57] highlight that the adoption of digital technologies fosters the acquisition of digital capabilities, a result of the experience and learning within the organization. Furthermore, digital capabilities can be identified as a driving force for the adoption of AI. For example, on the SME opts to utilize cloud computing services, such as Amazon Web Services (AWS) or Microsoft Azure, for managing its data storage, processing, and computing requirements [58]. This decision enables the company to access scalable and on-demand computing resources without necessitating substantial upfront investments in physical infrastructure. This, in turn, updates the process for the SME to implement AI algorithms hosted on the cloud, which analyze historical sales data, customer behavior, and external factors (such as market trends or seasonal patterns). Moreover, the decision of the SME to modernize its production processes through the integration of smart devices, IoT sensors, and robotics can facilitate the adoption of AI. For instance, the installation of smart sensors on machinery and production lines allows for the collection of real-time data concerning factors like machine performance, energy consumption, and product quality ([59]; Chen, 2020). Subsequently, this collected data could be transmitted to an AI system, where advanced

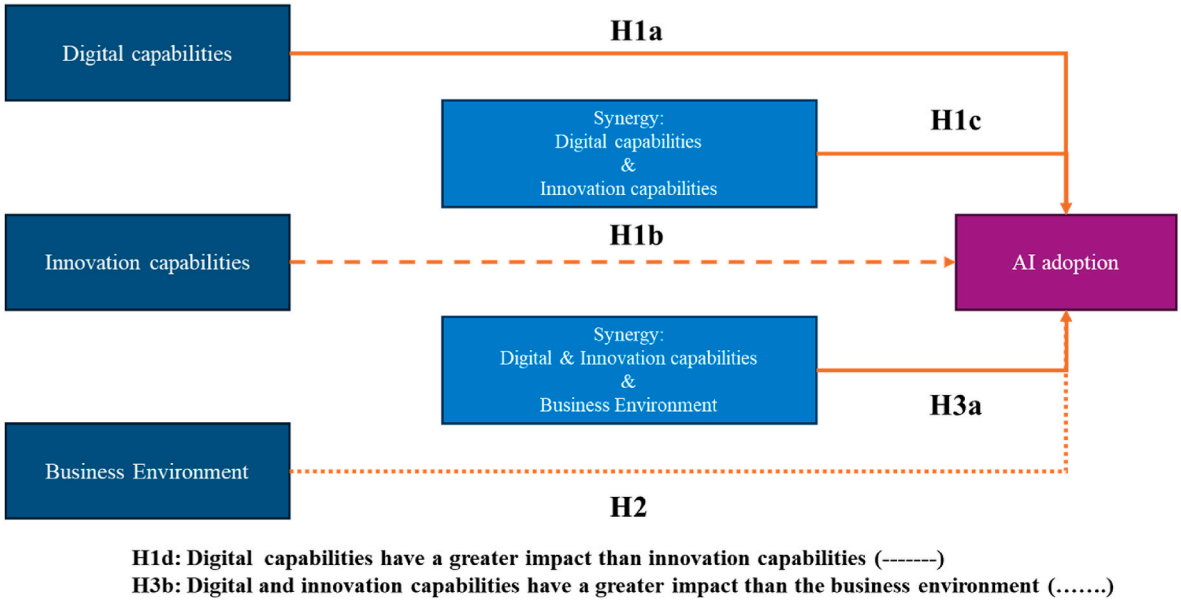

Fig. 1. Framework and hypotheses.

algorithms analyze it to predict potential equipment failures. Moreover, the AI system can proactively identify issues such as wear in a robotic arm or deviations from standard machine performance, enabling the anticipation of potential breakdowns [60]. Additionally, if a specific machine requires maintenance, the AI system directs a robot to temporarily assume that task, ensuring minimal disruption to the overall production line. Therefore, the integration of smart devices, IoT and robotics, with AI can transform the traditional manufacturing process into a smart and adaptive system. These examples illustrate how digital technologies can facilitate the integration of AI into production processes, resulting in smart manufacturing that is responsive, efficient, and technologically advanced. Hence, we propose.

Hypothesis 1a. The digital capabilities of SMEs facilitate the adoption of AI.

Regarding innovation capabilities, they should facilitate the integration of AI in companies. The adoption of AI by organizations requires not only AI capabilities from staff and managers but also necessitates changes in processes, organization, and the products of the companies [1,2]. These changes can be facilitated by the presence of innovative capabilities, where the organization has previously developed various innovations. Thus, the adoption of AI by organizations involves a profound reassessment of their existing processes ([5]; Baabdullah et al., [61]). Organizational and structural changes are essential to incorporate AI significantly. Innovation plays a fundamental role by providing a productive ground for experimentation and development. Companies that have developed innovative capabilities can be better equipped to implement AI effectively. These innovative capabilities not only refer to the ability to generate new ideas but also to the skill to adapt and modify existing processes and products to integrate cutting-edge technologies [2]. Moreover, innovation also can become a driver for the creation of new products and services enabled by AI. Wang et al. [11] point out that innovative companies can identify market opportunities and design solutions that leverage the full potential of AI. This entails not only the development of new products but also the continuous improvement of existing products and services through AI, leading to increased customer satisfaction and a sustainable competitive advantage. Hence, we propose.

Hypothesis 1b. The innovative capabilities of SMEs facilitate the adoption of AI.

Digital and innovative capabilities can coexist simultaneously within the organization, and this presence can impact the adoption of AI. Analyzing their influence on AI adoption requires considering the synergistic effects highlighted in existing literature, particularly when multiple types of innovative capabilities are integrated. Previously Arranz et al. [29] indicated, from the perspective of dynamic capability, that research highlights the innovation process within organizations requiring the mobilization of resources, capabilities, and organizational routines. It underscores the synergies that emerge when companies embrace various forms of innovation in their organizational processes, potentially leading to the integration of innovation strategies that can produce synergies and economies of scale ([29]; Fagerber, 2018).

Regarding digital and innovation capabilities in the context of SMEs, these capabilities can generate synergistic and complementary effects that facilitate the adoption of AI. Digital capabilities entail a robust understanding of digital technologies [5], while innovation capabilities involve the ability to apply technical knowledge to create new and effective solutions [26]. Bhalerao et al. [12] point out that when employees and managers in SMEs possess digital capabilities, they acquire a better understanding of the capabilities and limitations of AI. This understanding enables them to assess how AI can be effectively integrated into their operations and business processes. Furthermore, digital capabilities empower SMEs to identify specific areas where AI can be applied to enhance efficiency and productivity. Simultaneously, innovation capabilities empower SMEs to discover ways to leverage AI in their day-to-day operations [2]. For instance, they can identify opportunities to automate repetitive tasks, enhance product or service personalization, or even develop new AI-based products. Moreover, Kulkow (2021) point out that the adoption of AI will require the creation of organizational routines and procedures, for which possessing capabilities in process and organizational innovations becomes crucial.

Therefore, we posit that digital and innovation capabilities provide a solid foundation for SMEs to adopt and make the most of AI. By understanding technology, identifying opportunities, adapting continuously, creatively solving problems, and enhancing competitiveness, SMEs can leverage the synergistic and complementary effects of these capabilities to drive their growth and success in the era of AI.

Hypothesis 1c. Digital and innovation capabilities, when acting in conjunction in SMEs, generate synergistic and complementary effects, in the adoption of AI.

The relative importance of digital capabilities compared to innovation capabilities in adopting AI in a SME, both sets of capabilities are

crucial, but their impact can vary. The effective integration of AI into an SME benefits from a balanced combination of digital and innovation capabilities. Technical understanding and the ability to adapt technology are combined with creativity to generate innovative solutions, collectively driving success in the adoption of artificial intelligence in the business context [5,12].

Concerning the relative importance of both in adopting AI, digital capabilities are essential for understanding the underlying technology of AI and how to integrate it into the company's existing systems. SMEs with strong digital capabilities can quickly adapt to new tools and technologies, facilitating the technical implementation of AI systems [11]. Alternatively, innovation capabilities involve creativity and skills to adapt technology to meet the specific needs of the company [29]. If the SME requires efficient technical implementation and the company has complex digital systems and needs a rapid and efficient technical implementation, digital capabilities can be crucial to ensure an integration of AI into its existing infrastructure. Hence, we propose.

Hypothesis 1d. Digital capabilities have a greater impact than innovation capabilities on the adoption of AI in SMEs.

3.2. Business environmental support and the impact in AI adoption in SME

The literature emphasizes that a proper integration of AI in companies depends on a supportive environment [11,12]. Business environmental support, financial support, collaboration opportunities, skilled workforce, and robust infrastructure, can play a pivotal role in facilitating the adoption and integration of AI technologies. Hence, business environmental support should facilitate the AI adoption in SMEs stands.

More in detail, access to financial resources is fundamental for SMEs to invest in AI technologies [10]. Financial support can enable SMEs to acquire AI software, hardware, and hire skilled professionals. Additionally, it aids in funding research and development activities, ensuring the customization of AI solutions to meet specific business needs [9]. Moreover, collaborative networks and partnerships with research institutions, tech companies, and other SMEs provide invaluable knowledge exchange opportunities [1,12]. SMEs benefit from shared insights, best practices, and collaborative projects, enhancing their understanding of AI applications. Collaborative environments foster innovation and experimentation, leading to the development of AI solutions tailored for SME requirements. Additionally, a workforce equipped with AI-related skills is imperative for successful implementation [12]. Business environmental support should focus on training programs, workshops, and educational initiatives. Skilled employees can effectively exploit AI tools, ensuring optimal utilization and problem-solving. Moreover, SMEs need a robust IT infrastructure to support AI implementation [62]. Adequate internet connectivity, data storage facilities, and cybersecurity measures are essential. Business environmental support in the form of subsidized technology infrastructure and technical support ensures SMEs possess the necessary foundation to host and operate AI applications securely.

Therefore, business environmental support is a driver of AI adoption in SMEs. By providing financial support, fostering collaboration, skilled workforce, and ensuring robust infrastructure, the business ecosystem can empower SMEs the transformative power of AI. This holistic approach not only accelerates AI adoption but also strengthens SMEs, making them agile, competitive, and future-ready in the digital landscape. Hence, we propose.

Hypothesis 2. The business environmental support facilities the adoption of AI in SMEs.

3.3. Business environmental support and internal capabilities in AI adoption in SMEs

Regarding the relationship between business environmental support and internal capabilities (digital and innovation), we assert that there is a significant synergistic effect between business environmental support (including funding, collaboration, skills, infrastructure, among others) and internal capabilities in the adoption of AI in SMEs. This synergy is crucial for the successful adoption of AI by SMEs and for maximizing the benefits derived from it.

As we have observed in previous hypotheses, digital and innovation capabilities are essential for understanding, implementing, and adapting AI technologies in the day-to-day operations of SMEs. Digital capabilities facilitate the understanding of AI tools, while innovation capabilities enable the adaptation of these tools to meet specific business needs. In this context, business environmental support, through financial support and collaboration opportunities, for example, can facilitate the acquisition of AI technologies and access to experts in the field. Collaborations with technology companies and research centres enable SMEs to benefit from specialized knowledge and expertise, accelerating the AI adoption process. Adequate technological infrastructure and technical skills are essential for implementing and maintaining AI systems. The environmental support that provides technological infrastructure and training programs in technical skills creates a conducive environment for AI adoption.

In summary, business environmental support and internal capabilities can interact synergistically to facilitate the adoption of AI in SMEs. This synergy not only accelerates the adoption of AI technologies but also drives innovation, improves competitiveness, and significantly contributes to the growth and positive evolution of SMEs in the digital economy.

Hypothesis 3a. Business environmental support in combination with digital and innovation capabilities, has a synergistic effect on the adoption of AI in SMEs.

Regarding the drivers with the greatest impact, as we have observed in previous hypotheses, internal capabilities can provide a solid foundation for adopting AI in SMEs, while environmental support represents supporting from the ecosystem. SMEs with robust digital capabilities can have the ability to understand, utilize, and adapt AI technologies effectively. This includes the capacity to analyze data, use software, and comprehend the technological implications of AI. Moreover, the ability to innovate is crucial. SMEs with innovative skills can apply AI in creative ways, developing unique solutions and adapting AI technologies to meet specific business needs.

However, the effectiveness of business environmental support depends on the degree of elaboration and cohesion. According to Zietsma et al. [63], the aim is to understand the condition of an environmental support framework and its transformative capacity, which is linked to the degree of elaboration and coherence of the elements forming the institutional ecosystem. Firstly, existing literature indicates that the degree of elaboration of the institutional ecosystem relies on the set of measures adopted and their level of implementation [63–65]. The literature presents contradictory arguments, suggesting that a high degree of elaboration and implementation can both benefit and hinder change processes. Secondly, the transformative capacity of the institutional infrastructure is influenced by the degree of coherence of its structure. Following Greenwood et al. [66], which emphasizes institutional complexity, one can assess whether ecosystem elements reinforce each other and align around an institutional logic, that is, a coherent rationality in the prevailing rules of the game, or whether they reflect different rationalities that may be in competition. Hence, we propose.

Hypothesis 3b. Internal capabilities have a greater impact on the adoption of AI in SMEs than business environmental support.

4. Methodology

4.1. Database

To empirically investigate the research questions, we analyze data from Eurostat's Flash Eurobarometer No. 486, commissioned by the European Commission [67]. This survey, conducted between February and May 2020, explores diverse topics, including innovation and digital technologies. This survey is a highly regarded instrument that provides statistically representative data on SMEs across the 27 EU member states, as well as in several other countries including Bosnia and Herzegovina, Brazil, Canada, Iceland, Japan, North Macedonia, Norway, Serbia, Turkey, the UK, the USA, and Kosovo. The survey covers businesses employing one or more people across a wide range of sectors, including mining, manufacturing, construction, information and communication, and many others, following the NACE codes. The sampling method is stratified, ensuring that the survey accurately reflects the diverse business landscape across these regions. Data collection was conducted via telephone interviews in their respective national languages using the Computer-Assisted Telephone Interviewing (CATI) method [67].

As this study specifically targets SMEs in Europe, the sample utilized comprises 12,108 SMEs. The geographical scope of the database encompasses all 27 countries in the EU. The survey is statistically representative of SMEs across various sizes and sectors. To confirm this, we conducted T-tests to ascertain if there were significant differences between the population and the final sample concerning size and sectors, resulting in no significant bias.

Tables 1 and 2 illustrate the sample distribution based on size and geographical region.

4.2. Measures

The initial component in our research model encompasses digital capabilities. To measure these capabilities, we utilized an established multi-item indicator from the literature, which assumes that the possession of digital technologies equips the company with these capabilities [26]. In alignment with existing literature, the questionnaire employs a multi-item approach, incorporating various emerging technologies like big data, cloud technology, robotics, data analytics, and blockchain. The specific question from the Eurobarometer survey asks: "Which of the following digital technologies has your enterprise adopted?" The response options include: i) Cloud computing; ii) Robotics; iii) Smart devices; iv) Big data analytics; v) High-speed infrastructure; and vi) Blockchain. To assess the degree of digital capabilities in SMEs, we used these responses to construct a new variable, formulated as a cumulative index of the six types of digital technologies (Cronbach's Alpha: .718).

The second variable, innovation capabilities, was also based on a well-established multi-item measure, considering four types of innovation in companies (Oke et al., 2007; [29]). The Eurobarometer survey question posed is: "Has your enterprise introduced any of the following types of innovations?" The options include: i) A new or significantly improved product or service to the market; ii) A new or significantly improved production process or method; iii) A new organization of management or a new business model; and iv) A new way of selling your goods or services. In line with previous variables, *innovation capabilities* is created as a cumulative index (Cronbach's Alpha: .780).

Table 1
Sample size distribution.

Employees	Frequency	Percent
1 to 9	7708	63.7
10 to 49	2571	21.2
50 to 250	1829	15.1
Total	**12108**	**100.0**

Table 2
Sample geographical distribution.

Countries	Frequency	Percent
FR - France	485	4.0
BE - Belgium	475	3.9
NL - The Netherlands	474	3.9
DE - Germany	479	4.0
IT - Italy	476	3.9
LU - Luxembourg	195	1.6
DK - Denmark	479	4.0
IE - Ireland	475	3.9
GR - Greece	482	4.0
ES -Spain	476	3.9
PT - Portugal	479	4.0
FI - Finland	476	3.9
SE - Sweden	476	3.9
AT - Austria	470	3.9
CY - Cyprus (Republic)	201	1.7
CZ - Czech Republic	482	4.0
EE - Estonia	484	4.0
HU - Hungary	481	4.0
LV - Latvia	489	4.0
LT - Lithuania	481	4.0
MT - Malta	201	1.7
PL - Poland	475	3.9
SK - Slovakia	492	4.1
SI - Slovenia	488	4.0
BG - Bulgaria	476	3.9
RO - Romania	479	4.0
HR - Croatia	482	4.0
Total	**12108**	**100.0**

The third set of measures includes variables that pertain to the ecosystem in which the company operates. In this context, a substantial body of literature indicates that a favorable ecosystem, encompassing aspects such as financial support, knowledge, and regulations, positively influences the digitalisation and environmental practices, as well as the innovation of companies. The Eurobarometer survey question used to assess this aspect asks: "How would you rate your business environment concerning i) Overall strength and performance of your regional business environment; ii) Access to and collaboration with business partners, including other enterprises, the public sector, educational institutions, research organizations, etc.; iii) Availability of staff with the right skills, including managerial skills; iv) Access to financial support, and v) Infrastructure for business". In alignment with the preceding variables, business environmental support is constructed as a cumulative index based on these responses (Cronbach's Alpha: .711).

The final variable refers to the adoption of AI. For this measure, we used the Eurobarometer survey's question on AI implementation stages, which categorizes adoption into four stages, ranging from no intention to full implementation. The response options in the question include: i) Yes, and it has already been implemented; ii) Yes, and it is in the process of being implemented; iii) No, but it may be considered in the future; and iv) No, and it will not be in the future. To operationalize this, we establish an ordinal scale ranging from 1 to 4. In this scale, 1 signifies null intention, progressing up to 4, which represents complete implementation.

4.3. Variables of control

Moreover, we have included some control variables. The control variables pertains to internal aspects of SMEs, such as the *size*, the company's age (*year*), and *sector* (manufacturing/service). Regarding size, we categorized the companies into three groups: from 0 to 9 employees as micro-enterprises; from 10 to 49 employees as small enterprises; and from 50 to 250 employees as medium-sized enterprises. The second control variable is the year of establishment. In this context, the variable of age has served as a moderating factor in digitalisation and

Table 3
Regression analysis.

Variables	Model 1	Model 2	Model 3	Model 4	Model 5	Model 6	Model 7	VIF
YEAR	−0.146[a] (0.055)	−0.131[a] (0.062)	−0.125[a] (0.059)	−0.128[b] (0.055)	−0.104* (0.067)	−0.139[b] (0.057)	−0.139[b] (0.061)	1.051
SIZE	0.337[c] (0.048)	0.281[c] (0.054)	0.126[b] (0.053)	0.278[c] (0.049)	0.111[a] (0.060)	0.174[c] (0.051)	0.157[c] (0.056)	1.051
SECTOR	0.111[b] (0.043)	0.112[a] (0.040)	0.161[a] (0.101)	0.107[b] (0.075)	0.181[a] (0.113)	0.112[a] (0.099)	0.175[a] (0.106)	1.128
ENVIRONMENT		0.062[b] (0.022)			0.008 (0.024)			1.019
DIGITALISATION			0.863[c] (0.029)		0.798[c] (0.034)			1.139
INNOVATION				0.453[c] (0.026)	0.190[c] (0.033)			1.175
DIGITALISATION& INNOVATION						0.195[c] (0.008)		
DIGITALISATION& INNOVATION& ENVRIONMENTAL							0.014[c] (0.001)	
−2 Log Likelihood	120.524	559.049	461.880	429.845	2282.679	838.521	1546.920	
Chi-Square	49.484	38.595	1090.007	334.963	846.357	687.664	563.466	
Sig.	0.000	0.000	0.000	0.000	0.000	0.000	0.000	
Cox and Snell	0.004	0.004	0.088	0.028	0.092	0.056	0.051	
Nagelkerke	0.011	0.010	0.227	0.072	0.230	0.146	0.136	
McFadden	0.009	0.009	0.188	0.058	0.189	0.119	0.111	

[a] $p < 0.05$.
[b] $p < 0.01$.
[c] $p < 0.001$.

sustainability in a wide array of studies. Finally, the sector affiliation is incorporated by considering whether the company belongs to the manufacturing or service sector.

5. Analysis and results

Prior to delving into result analysis, we conducted some checks on the survey to ensure the reliability of the questionnaires and responses. This included testing for common method variance (CMV) and common method bias (CMB) using the approach outlined by Podsakoff et al. [68]. The analysis identified five distinct latent constructs that collectively explain 68.4 % of the variance. The first factor contributes to 22.110 % of the variance, which falls below the recommended threshold of 50 %. This outcome indicates that CMV and CMB do not pose significant concerns in our results.

Regarding Hypotheses 1a, 1b, and 2, we conducted a regression analysis to assess the impact of independent and control variables on the adoption of AI (Table 3). In Model 5, our findings reveal a positive and significant coefficient for the cumulative index measuring the level of digital capabilities ($\beta = .798$; $p < 0.001$) as well as for innovative capabilities ($\beta = .190$; $p < 0.001$), indicating a positive effect. Concerning the control variables, we observe that both size and sector have a positive effect on digitization, whereas firms' age has a negative effect. Furthermore, when analyzing the effect of business environmental support on the probability of adopting AI in Model 2, a positive effect is observed ($\beta = .062$; $p < 0.05$) when the variable acts individually. However, when combined with internal capabilities, it does not show significance in the adoption of AI. Additionally, in terms of the robustness of our analysis, the final column of the regression analysis presents the VIF (variance inflation factor) scores, affirming the absence of collinearity concerns among the digital capabilities, innovation capabilities, and external support variables. Therefore, we corroborate the hypotheses.

In addition to the previous analysis and with the aim of delving deeper into the relationship between independent variables and the dependent variable, we examined into the analysis of the effect of digital and innovative capabilities on the probability of adopting AI in SMEs (Table 4), analyzing the marginal effect of both variables. Thus, for digital capabilities variable, with a range from 0 to 6, Model 1 shows the marginal effects of each value of the variable, using zero score as the reference value. We observe that the relationship between digital capabilities and AI follows a monotonically increasing function, confirming that a higher value of digital capabilities corresponds to a greater probability of an effect on AI. In Model 2, we see the marginal effect of innovative capabilities. In the same line as the previous analysis, we observe that innovative capabilities affect AI following a monotonically increasing relationship. On the other hand, in Model 3, we see the marginal effect of the environmental variable, noting that the function is monotonically increasing but not across the entire range of the variable, as at low values of the variable, the marginal effect is not significant (see Table 5).

Regarding Hypotheses 1d and 3b, which posit how is the impact both digital and innovative capabilities, as well as business environmental support, on the adoption of AI, we enhance our prior regression analysis by incorporating ANN.[1] The inclusion of ANN in our study allows us to explore the intricate relationships among input variables and their influence on the output variable, accommodating nonlinearities and interactions within the input variables. Unlike traditional linear regression models, ANNs, particularly the Multi-Layer Perceptron (MLP), are capable of modeling complex, non-linear relationships that are often present in real-world data [69]. This makes ANNs particularly well-suited for capturing subtle patterns and interactions that might be missed by conventional techniques, thereby enhancing the predictive accuracy and robustness of our model. To structure the ANN-MLP architecture, we follow to the approach outlined by Wang [70] and Arranz et al. [69]. [71] The development of the ANN-MLP architecture involves two key considerations, first, determining the number and size of the hidden layers, and second, selecting the learning algorithm. While the number of inputs and outputs is dictated by the available input and output variables, the determination of the number and size of hidden layers involves experimenting with various combinations of hidden layer numbers and neuron counts. This is achieved through a trial-and-error methodology ([72]; [73]). In simpler terms, different

[1] An Artificial Neural Network (ANN), specifically a Multilayer Perceptron (MLP), is a type of machine learning model inspired by the structure and functioning of the human brain. Comprising layers of interconnected nodes (neurons), an MLP consists of an input layer, one or more hidden layers, and an output layer. Each connection between nodes is associated with a weight, and the network learns through a process called backpropagation, where it adjusts these weights iteratively to minimize the difference between predicted and actual outcomes during training. MLPs are adept at capturing complex patterns and relationships in data, making them particularly suited for tasks such as classification and regression. The nodes in each layer apply a mathematical activation function to the weighted inputs, introducing non-linearity to the model. This non-linearity enables MLPs to learn and represent intricate mappings in data, enhancing their capacity to handle intricate tasks within the realm of machine learning.

Table 4
Regression analysis (Marginal effect).

Variables	Model 1	Model 2	Model 3	Model 4	Model 5	Model 6
YEAR	−0.126[b]	0.059	−0.132[c]	0.055	−0.128[b]	0.062
SIZE	0.124[c]	0.053	0.272[c]	0.049	0.289[c]	0.054
SECTOR	0.060	0.101	122[a]	0.095	−0.111	0.104
[DIGITALISATION = 0.00]	0[a]					
[DIGITALISATION = 1.00]	1.026[c]	0.401				
[DIGITALISATION = 2.00]	1.899[c]	0.384				
[DIGITALISATION = 3.00]	2.608[c]	0.380				
[DIGITALISATION = 4.00]	3.518[c]	0.381				
[DIGITALISATION = 5.00]	4.573[c]	0.388				
[DIGITALISATION = 6.00]	5.209[b]	0.396		.		
[INNOVATION = .00]			0[a]			
[INNOVATION = 1.00]			0.164[c]	0.239		
[INNOVATION = 2.00]			0.476[c]	0.226		
[INNOVATION = 3.00]			0.924[c]	0.221		
[INNOVATION = 4.00]			1.326****	0.218		
[INNOVATION = 5.00]		.	2.056[c]	0.221		
[ENVIRONMARGINAL = 0.00]					0[a]	
[ENVIRONMARGINAL = 1.00]					0.249	1803.822
[ENVIRONMARGINAL = 2.00]					13.234	0.204
[ENVIRONMARGINAL = 3.00]					13.127[c]	0.109
[ENVIRONMARGINAL = 4.00]				.	13.455[c]	0.000
−2 Log Likelihood	457.203		418.107		225.829	
Chi-Square	1094.684		346.702		40.663	
Sig.	0.000		0.000		0.000	
Cox and Snell	0.088		0.029		0.005	
Nagelkerke	0.228		0.075		0.012	
McFadden	0.189		0.060		0.009	

[a] $p < 0.05$.
[b] $p < 0.01$.
[c] $p < 0.001$.

architectures are tested using diverse activation functions, with the goal of identifying the configuration that minimizes errors.

Fig. 2 depicts the architecture of the ANN-MLP used in the simulation, performing 3 input nodes, 2 nodes in the hidden layer, and 1 output variable node. In Fig. 3, the normalized importance of each input variable concerning the output variable is illustrated.[2] It is evident that digitalisation capabilities have the most significant impact on AI (digitalisation: .730; 100 % normalized value), followed by innovation capabilities (innovation: .195; 26.7 % normalized value), with business environmental support having the least impact on the probability of adopting AI (digitalisation: .075; 10.3 % normalized value). Furthermore, we assessed the robustness of the analysis by fitting the ANN-MLP design, revealing an error level of 5.6 % in the testing stage and 5.4 %. Consequently, the Hypotheses are confirmed.

Regarding Hypotheses 1c and 3a on whether the variables of digital and innovation capabilities, along with business environmental support, acting in conjunction, have a synergistic effect on the adoption of AI, in Table 4, we observe the results of regression analysis. Model 7 displays the joint variable of digital and innovation capabilities (*internal capabilities= digital * innovation*), along with its marginal effect, considering zero as the reference value. Upon examining the results, we first note that the function is monotonically increasing. Moreover, we observe that the growth of the marginal effect is decreasing, approaching more of a concave function than a convex function, which could not explain the existence of synergistic effects. As for the joint effect of the three input variables on the adoption of AI, in Model 8, we see that the function is also monotonic but clearly concave, as the marginal effects decrease. Hence, from this analysis, we cannot confirm the hypotheses of the existence of synergistic effects.

In addition to the regression analysis presented, we have conducted an additional analysis using tree regression. Tree model analysis is a technique employed in data mining and machine learning to construct predictive models. It operates by recursively dividing the data into subsets based on the values of input features. These subsets are depicted as branches of a tree, where each internal node corresponds to a decision based on a feature, and each leaf node represents the predicted outcome. Once the tree is constructed, it can be utilized to make predictions on new data. Tree model analysis offers several advantages, including interpretability, as decision rules are presented clearly and intuitively.

More specifically, concerning Hypothesis 1c, the econometric models for this analysis are outlined as follows:

AI = f (digital capabilities; innovation capabilities)

In Fig. 4, the outcomes of this analysis are presented, utilizing CHAID as a method,[3] and illustrating the potential combinations of both capabilities with different values. Initially, two levels of the decision tree are observed, with the first corresponding to digital capabilities, having the greatest impact, and the second to innovation capabilities, exhibiting a lower impact on the probability of adopting AI in SMEs (Chi-

[2] Ibrahim [75] revises some methods for assessing the relative importance of input variables in artificial neural networks. These methods are based on Garson's algorithm, which uses the absolute values of the final connection weights when calculating variable contributions. $RI_x = \sum_{|}^{n} \frac{|w_{xy}\ w_{yz}|}{\sum_{y=1}^{m} |w_{xy}\ w_{yz}|}$ where RI_x is the relative importance of neuron x. $\sum_{y=1}^{m} w_{xy}\ w_{yz}$ represents the sum of the product of the final weights connection from input neurons to hidden neurons with the connnections from hidden neurons to output neurons.

[3] The CHAID (Chi-squared Automatic Interaction Detection) method is a hierarchical tree-building algorithm commonly employed for cluster analysis. This method recursively partitions a dataset into homogeneous subsets based on the most significant predictors, identified through a series of chi-squared tests. Beginning with the entire dataset, CHAID identifies the variable that best discriminates between the target classes and creates branches accordingly. This process continues iteratively, producing a tree structure where each node represents a decision point based on specific attribute thresholds. CHAID is particularly useful for analysing categorical data, as it efficiently identifies interactions between variables and produces a hierarchical cluster structure that aids in understanding complex relationships within the dataset.

Table 5
Marginal effect of regression analysis.

Variables	Model 7		Model 8	
	Estimation	Error	Estimation	Error
YEAR	−0.147[b]	0.057	−0.122[b]	0.061
SIZE	0.168[c]	0.051	0.156[c]	0.055
SECTOR	0.107[a]	0.078	0.075	0.104
[INTERNALMARGINAL = 0.00]	0[a]	.		
[INTERNALMARGINAL = 1.00]	18.023[c]	0.000		
[INTERNALMARGINAL = 2.00]	19.474[c]	0.632		
[INTERNALMARGINAL = 3.00]	19.572[c]	0.615		
[INTERNALMARGINAL = 4.00]	20.365[c]	0.607		
[INTERNALMARGINAL = 5.00]	21.448[b]	0.606		
[INTERNALMARGINAL = 6.00]	22.305[b]	0.606		
[SYNERGYMARGINAL = 0.00]			0[a]	.
[SYNERGYMARGINAL = 1.00]			18.780[c]	0.000
[SYNERGYMARGINAL = 2.00]			20.133[c]	0.555
[SYNERGYMARGINAL = 3.00]			20.333[c]	0.526
[SYNERGYMARGINAL = 4.00]			21.642[a]	0.521
[SYNERGYMARGINAL = 5.00]			22.723[a]	0.522
−2 Log Likelihood	378.665		312.993	
Chi-Square	683.069		541.536	
Sig.	0.000		0.000	
Cox and Snell	0.056		0.049	
Nagelkerke	0.145		0.131	
McFadden	0.118		0.107	

[a] $p < 0.05$.
[b] $p < 0.01$.
[c] $p < 0.001$.

square: 1626.938; df: 5; sig.: .000). To explore into the analysis, we identified the branches that are more likely to adopt AI. Previous recoding the AI variable, at the first level, node 6 emerges as having a higher probability of adopting AI, where the digital capabilities variable, ranging from 0 to 6, takes a high value (score: 5 and 6), estimating that 51.8 % of cases adopt AI. Moreover, when we examine node 5 combined with node 15, we observe a synergistic effect between the variables of digital capabilities and innovation capabilities. More in detail, node 5 indicates that 16.2 % of SMEs adopt AI, with a medium value of digital capabilities (score: 3). However, when this is combined with high values of innovation capabilities, as represented by node 15, with a value of 4 (range: 0 to 5), the probability of adopting AI in SMEs increases to 28.3 % (Chi-square: 19.029; df: 2; sig.: .000). Therefore, it is evident that the adoption of AI is more likely with high values of digital capabilities, or when combining medium values of digital capabilities with high values of innovation capabilities, resulting in the latter case in a synergistic effect, thus corroborating Hypothesis 1c.

In the same way, we have conducted an analysis between internal capabilities (digital and innovation) and business environmental support, and the results have not demonstrated the existence of complementarities between these variables. As shown in Fig. 5, the analysis indicates that internal capabilities significantly influence the probability of adopting AI in SMEs (Chi-square: 983.702; df: 3; sig.: .000), rejecting the influence of business environmental support and thereby rejecting Hypothesis 3a.

6. Discussion

Based on our results, the first set of hypotheses, which examine the impact of digital capabilities, innovation capabilities, and business environmental support, support these factors as crucial drivers for the adoption of AI in SMEs. This discussion investigates the implications of our results and their alignment with existing literature. Regarding the hypotheses 1a, 1b, 1c, and 1d, the study extends prior research by highlighting the crucial role of digital capabilities, illustrating how the integration of smart devices, IoT, and robotics with AI can revolutionize traditional manufacturing processes into intelligent and adaptive systems ([59]; Chen, 2020 [59]; Chen, [74]). This finding highlights the significance of digitalisation, illustrated by technologies such as cloud computing, as a prerequisite for AI adoption. Our results contribute to the understanding that SMEs leveraging cloud computing services gain flexible access to computing resources, enabling them to deploy AI algorithms efficiently [58]. This combination permits SMEs to analyze

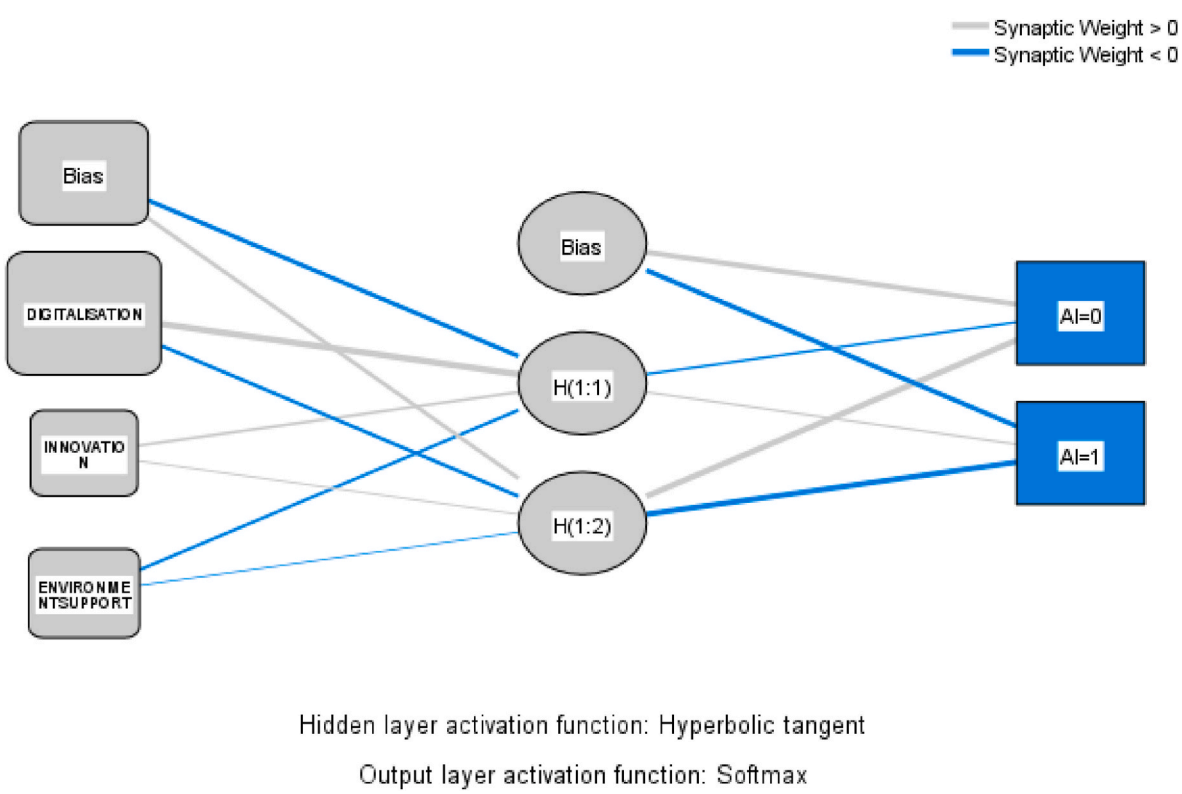

Fig. 2. The ANN-MLP architecture.

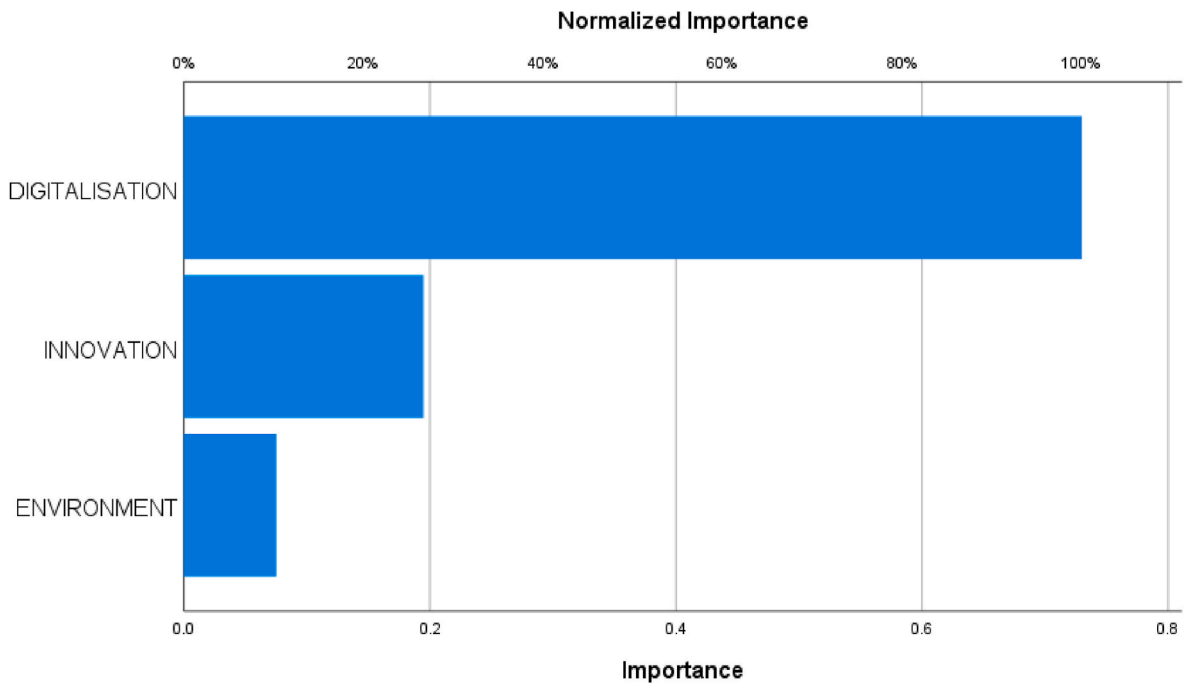

Fig. 3. Normalized importance of the input variables.

diverse datasets, including historical sales data, customer behavior, and external factors, paving the way for data-driven decision-making.

Moreover, our analysis reinforces the existing body of knowledge that underscores the significance of innovation capabilities in facilitating AI integration within organizations. Our results validate the notion that the adoption of AI necessitates more than just technical AI competencies among staff and managers; it requires comprehensive changes across processes, organizational structures, and product offerings [1,2]. By highlighting the critical role of innovative capabilities, our study contributes to the literature by showing that organizations with a strong innovation track record are better positioned to undergo the necessary organizational changes for effective AI implementation. However, our findings show significant doubt on the presumed role of business environmental support as a decisive driver in the adoption of AI. This challenges previous studies that consistently highlighted the pivotal role of a supportive environment in AI integration [11,12], suggesting that internal capabilities may play a more critical role than previously thought.

Considering the second set of hypotheses (hypothesis 2), which explores how the impact of both digital is and innovation capabilities along with business environmental support on AI adoption in SMEs, our study provides a nuanced contribution to the literature by establishing a quantitative ranking of the magnitude of their effects. The findings showcase the critical role of digital capabilities in the adoption process compared to innovation capabilities. When evaluating the relative importance of these capabilities in the context of AI adoption, our results show that digital capabilities are essential for understanding and integrating AI technology into existing systems, thereby facilitating continuous technical implementation [11]. Conversely, innovation capabilities encompass creativity and the expertise to adapt technology to align with the specific needs of a company [29]. Our study reinforces the idea that adaptability and technical expertise associated with digital capabilities are key to the successful integration of AI into the existing infrastructure of SMEs, a contribution that adds depth to the current literature. Moreover, the results bring to light the limited role that business environmental support plays compared to the internal capabilities of SMEs. This finding contributes to ongoing debates in literature about the effectiveness of environmental support, emphasizing the complexity of its relationship with organizational change. In particular, it contributes to research emphasizing that the effectiveness of environmental support depends on the degree of elaboration and cohesion within the institutional framework [63], and to research that suggests that a high degree of elaboration and implementation can either facilitate or impede change processes [64,65]. This underscores the complexity of the relationship between business environmental support and its impact on organizational change. Furthermore, another essential aspect of the transformative capacity of institutional ecosystems is closely connected to the degree of coherence within their structure, as highlighted by Greenwood et al. [66]. This underscores the importance of the internal consistency and alignment of different elements within the institutional ecosystem for effective transformative processes.

The final set of hypotheses, Hypotheses 3a and 3b, investigate the existence of synergistic effects among the input variables in their impact on AI adoption in SMEs. Our results reveal a nuanced understanding of complementarity, showing that in SMEs with high digital capabilities, innovation capabilities do not significantly increase the probability of AI adoption. However, when the level of digital capabilities is lower, the complementarity with innovation capabilities exhibits synergistic effects. This contribution to the literature clarifies the role of innovation capabilities in enhancing AI adoption, particularly when digital proficiency is lacking. Consistent with the literature, digital capabilities involve a robust understanding of digital technologies [5], while innovation capabilities encompass the ability to apply technical knowledge to generate new and effective solutions [26]. Our findings align with those of Bhalerao et al. [12], who noted that when employees and managers in SMEs possess digital capabilities, they gain a better understanding of AI's potential and limitations, facilitating its effective integration into business processes. However, we also demonstrate that innovation capabilities, while empowering SMEs to explore ways to leverage AI in their operations [2], play a secondary role in AI adoption when digital capabilities are already strong, highlighting the contextual nature of these capabilities' impact, as also noted by Kulkow (2021). Finally, as anticipated by previous findings, we observe that environmental support does not contribute to achieving synergistic effects with the internal capabilities of SMEs. These results align with previous studies that emphasize that synergistic effects occur when multiple

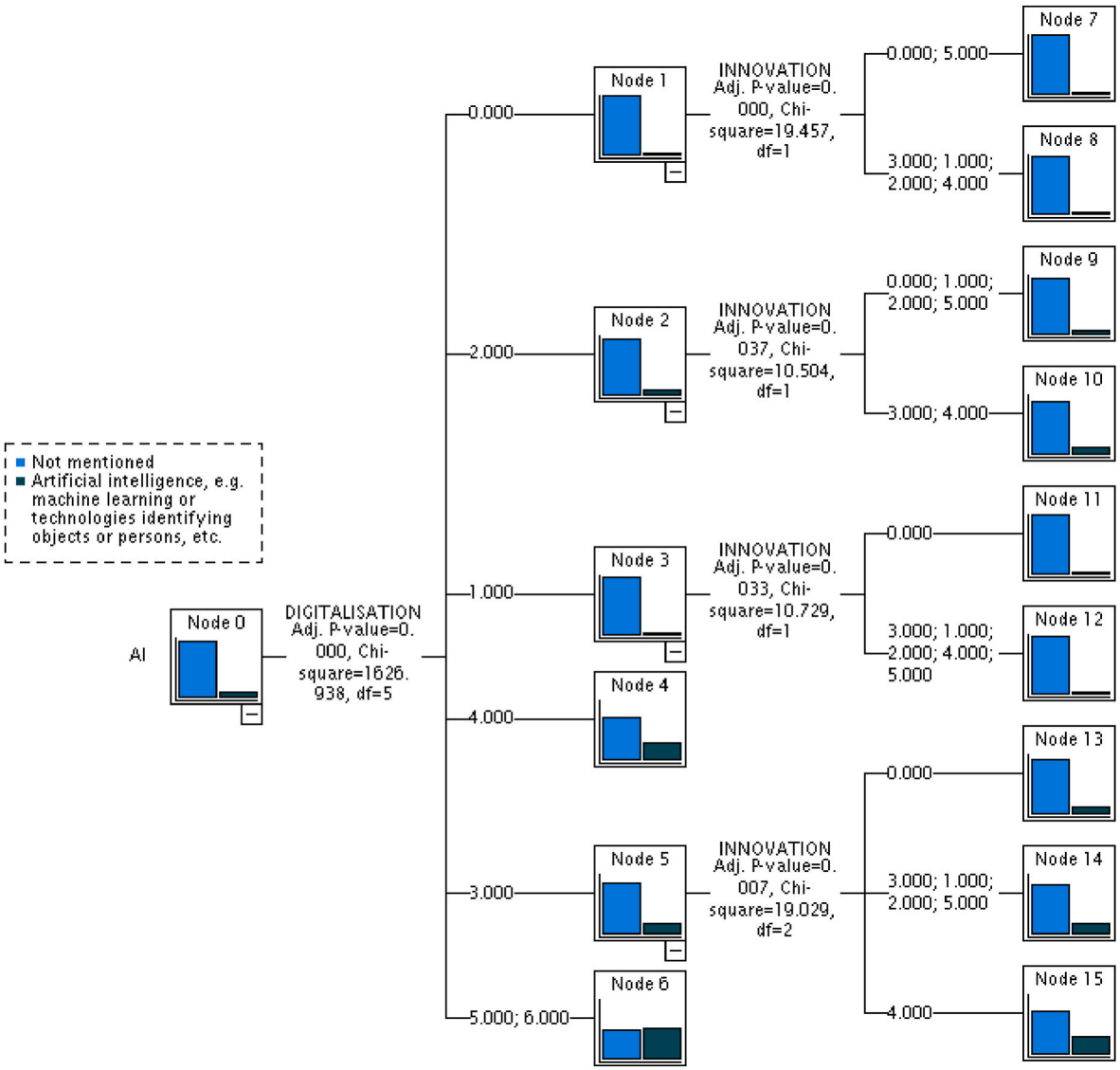

Fig. 4. Tree regression analysis (internal capabilities).

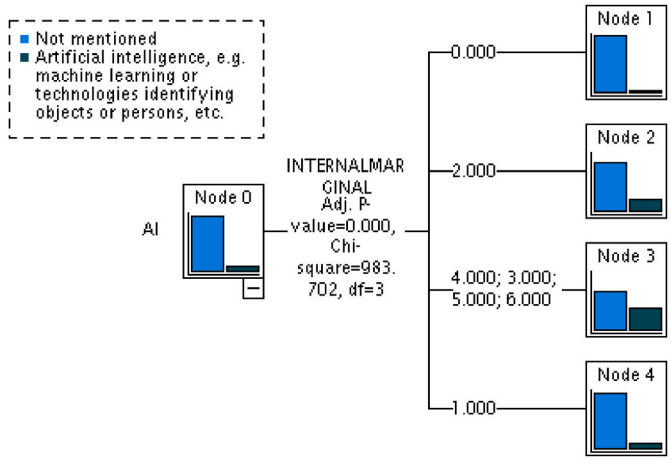

Fig. 5. Tree regression analysis (internal capabilities and business environmental support).

capabilities are integrated into the organization, enabling the sharing of organizational routines, processes, and the generation of economies of scale [29].

Therefore, our study provides valuable insights into the factors influencing AI adoption in SMEs, making significant contributions to the literature by robustly supporting the importance of digital and innovation capabilities as critical drivers of AI adoption. Specifically, our research emphasizes the pivotal role of digital capabilities in understanding AI technology and facilitating its integration into SMEs' existing systems. Innovation capabilities are also essential, particularly in adapting technology to meet specific organizational needs and fostering organizational change. Our findings challenge the traditionally recognized role of business environmental support, suggesting that internal capabilities may be more decisive in AI adoption. Furthermore, our analysis reveals the existence of synergistic effects between digital and innovation capabilities, particularly in SMEs with lower digital proficiency. These synergies highlight the importance of integrating various organizational capabilities to enhance AI adoption. Overall, our study contributes to a deeper understanding of the complex dynamics surrounding AI adoption in SMEs, emphasizing the critical role of internal capabilities while questioning the significance of external support mechanisms.

7. Conclusion

In this study, we investigated the intricate dynamics of adopting AI in SMEs, focusing on the interplay between digital capabilities, innovation capabilities, and business environmental support. Our findings offer novel insights into the dynamics of AI integration within SMEs, expanding the understanding of how internal and external factors contribute to successful AI adoption.

Our study contributes novel evidence in several key areas. First, by integrating digital capabilities and innovation, our findings highlight the combined effect of these factors on AI adoption. Unlike previous studies that often examined these capabilities in isolation, we demonstrate that digital capabilities, particularly in areas like cloud computing and IoT, are crucial for AI integration, with innovation capabilities playing a complementary role. Second, our research challenges the traditionally recognized role of business environmental support. Contrary to existing literature, we provide evidence that internal capabilities are more decisive in AI adoption than external support mechanisms, offering a more nuanced view of the factors driving AI adoption in SMEs. Third, we identify synergistic effects between digital and innovation capabilities, particularly in SMEs with lower digital proficiency. This novel insight suggests that boosting innovation capabilities can compensate for weaker digital capabilities, facilitating AI integration even in less digitally advanced SMEs. Finally, our focus on the European Union context offers region-specific evidence, contributing to the literature by providing insights tailored to the unique dynamics of SMEs in Europe.

Our study offers significant theoretical contributions by deepening the understanding of the interplay between digital capabilities, innovation capabilities, and business environmental support in driving AI adoption within SMEs. Dynamic capabilities theory traditionally emphasizes the importance of an organization's adaptability in the face of technological change. Our findings extend this framework by demonstrating that it is not just the presence of digital and innovation capabilities in isolation that matters, but the synergy between these capabilities that creates a more powerful foundation for AI adoption in SMEs. This highlights the dynamic interaction of internal capabilities, showing that when combined, digital and innovation capabilities generate a complementary effect, facilitating smoother and more effective AI integration.

Additionally, our study enriches resource dependency theory by revealing the role of business environmental support. While previous research has recognized the importance of external support for technology adoption, our findings emphasize that its effectiveness is contingent upon the institutional framework's degree of elaboration and cohesion. In other words, the presence of external support alone is not sufficient—its impact depends on how well the external environment aligns with SMEs' internal capabilities. This insight deepens resource dependency theory by showing the interdependence between internal capabilities and external support in the specific context of AI adoption.

Regarding the *implications for Managers and Policy-Makers,* for managers, our study underscores the critical importance of cultivating both digital and innovation capabilities. SMEs with a strong foundation in digital competencies can effortlessly integrate AI into existing systems, ensuring technical efficiency. Simultaneously, innovation capabilities empower SMEs to creatively apply AI, driving unique solutions and enhancing competitive advantage. Moreover, policymakers should consider the findings as they design support frameworks for SMEs. Recognizing the limited impact of business environmental support in isolation, policies should encourage a holistic approach that fosters the development of internal capabilities alongside providing a conducive external business environment. This may involve targeted training programs, financial incentives, and collaborative initiatives to enhance both digital and innovation competencies.

Despite its contributions, our study has limitations. The generalizability of findings may be constrained by the specific context and industry focus. Additionally, the rapidly evolving nature of technology poses challenges in capturing the full spectrum of AI applications. Future research could explore these dynamics across diverse industries and incorporate longitudinal perspectives to capture the evolving nature of AI adoption in SMEs.

CRediT authorship contribution statement

Marta F. Arroyabe: Writing – review & editing, Writing – original draft, Validation, Software, Methodology, Investigation, Formal analysis. **Carlos F.A. Arranz:** Writing – review & editing, Writing – original draft, Software, Methodology, Investigation, Formal analysis, Conceptualization. **Ignacio Fernandez De Arroyabe:** Writing – review & editing, Writing – original draft, Software, Methodology, Investigation, Formal analysis, Conceptualization. **Juan Carlos Fernandez de Arroyabe:** Writing – review & editing, Writing – original draft, Software, Methodology, Investigation, Formal analysis, Conceptualization.

Data availability

The data that has been used is confidential.

References

[1] B. Marr, Artificial Intelligence in Practice: How 50 Successful Companies Used AI and Machine Learning to Solve Problems, John Wiley & Sons, 2019.
[2] N. Haefner, J. Wincent, V. Parida, O. Gassmann, Artificial intelligence and innovation management: a review, framework, and research agenda, Technol. Forecast. Soc. Change 162 (2021) 120392.
[3] S. Hajkowicz, C. Sanderson, S. Karimi, A. Bratanova, C. Naughtin, Artificial intelligence adoption in the physical sciences, natural sciences, life sciences, social sciences and the arts and humanities: a bibliometric analysis of research publications from 1960-2021, Technol. Soc. 74 (2023) 102260.
[4] A. Zahlan, R.P. Ranjan, D. Hayes, Artificial intelligence innovation in healthcare: literature review, exploratory analysis, and future research, Technol. Soc. (2023) 102321.
[5] I. Kulkov, The role of artificial intelligence in business transformation: a case of pharmaceutical companies, Technol. Soc. 66 (2021) 101629.
[6] S. Nazir, S. Khadim, M.A. Asadullah, N. Syed, Exploring the influence of artificial intelligence technology on consumer repurchase intention: the mediation and moderation approach, Technol. Soc. 72 (2023) 102190.
[7] A. Samadhiya, S. Yadav, A. Kumar, A. Majumdar, S. Luthra, J.A. Garza-Reyes, A. Upadhyay, The influence of artificial intelligence techniques on disruption management: does supply chain dynamism matter? Technol. Soc. (2023) 102394.
[8] E.B. Hansen, S. Bøgh, Artificial intelligence and internet of things in small and medium-sized enterprises: a survey, J. Manuf. Syst. 58 (2021) 362–372.
[9] R. Wei, C. Pardo, Artificial intelligence and SMEs: how can B2B SMEs leverage AI platforms to integrate AI technologies? Ind. Market. Manag. 107 (2022) 466–483.
[10] J. Shao, Z. Lou, C. Wang, J. Mao, A. Ye, The impact of artificial intelligence (AI) finance on financing constraints of non-SOE firms in emerging markets, Int. J. Emerg. Mark. 17 (4) (2022) 930–944.
[11] J. Wang, Y. Lu, S. Fan, P. Hu, B. Wang, How to survive in the age of artificial intelligence? Exploring the intelligent transformations of SMEs in central China, Int. J. Emerg. Mark. 17 (4) (2022) 1143–1162.
[12] K. Bhalerao, A. Kumar, A. Kumar, P. Pujari, A study of barriers and benefits of artificial intelligence adoption in small and medium enterprise, Acad. Market. Stud. J. 26 (2022) 1–6.
[13] S. Nambisan, K. Lyytinen, Y. Yoo (Eds.), Handbook of Digital Innovation, Edward Elgar Publishing, 2020.
[14] S.F. Wamba, A. Gunasekaran, S. Akter, S.J.F. Ren, R. Dubey, S.J. Childe, Big data analytics and firm performance: effects of dynamic capabilities, J. Bus. Res. 70 (2017) 356–365.
[15] G. Vial, Understanding digital transformation: a review and a research agenda, Managing digital transformation (2021) 13–66.
[16] N. Omrani, N. Rejeb, A. Maalaoui, M. Dabić, S. Kraus, Drivers of digital transformation in SMEs, IEEE Trans. Eng. Manag. (2022). https://ieeexplore.ieee.org/abstract/document/9954626.
[17] K.S. Warner, M. Wäger, Building dynamic capabilities for digital transformation: an ongoing process of strategic renewal, Long. Range Plan. 52 (3) (2019) 326–349.
[18] R. Bouncken, R. Barwinski, Shared digital identity and rich knowledge ties in global 3D printing—a drizzle in the clouds? Global Strategy Journal 11 (1) (2021) 81–108.
[19] L. Agostini, A. Nosella, R. Filippini, Towards an integrated view of the ambidextrous organization: a second-order factor model, Creativ. Innovat. Manag. 25 (1) (2016) 129–141.
[20] I. Barreto, Dynamic capabilities: a review of past research and an agenda for the future, J. Manag. 36 (1) (2010) 256–280.
[21] A.J. Hillman, M.C. Withers, B.J. Collins, Resource dependence theory: a review, J. Manag. 35 (6) (2009) 1404–1427.

[22] J.M. Drees, P.P. Heugens, Synthesizing and extending resource dependence theory: a meta-analysis, J. Manag. 39 (6) (2013) 1666–1698.
[23] C. Hofer, H. Jin, R.D. Swanson, M.A. Waller, B.D. Williams, The impact of key retail accounts on supplier performance: a collaborative perspective of resource dependency theory, J. Retailing 88 (3) (2012) 412–420.
[24] B.N. Ghosh, Dependency Theory Revisited, Routledge, 2019.
[25] K.M. Eisenhardt, J.A. Martin, Dynamic capabilities: what are they? Strat. Manag. J. 21 (10–11) (2000) 1105–1121.
[26] D.J. Teece, The foundations of enterprise performance: dynamic and ordinary capabilities in an (economic) theory of firms, Acad. Manag. Perspect. 28 (4) (2014) 328–352.
[27] L.A. de Vasconcelos Gomes, A.L.F. Facin, M.S. Salerno, R.K. Ikenami, Unpacking the innovation ecosystem construct: evolution, gaps and trends, Technol. Forecast. Soc. Change 136 (2018) 30–48.
[28] D.S. Oh, F. Phillips, S. Park, E. Lee, Innovation ecosystems: a critical examination, Technovation 54 (2016) 1–6.
[29] N. Arranz, M.F. Arroyabe, J. Li, J.F. de Arroyabe, An integrated model of organisational innovation and firm performance: generation, persistence and complementarity, J. Bus. Res. 105 (2019) 270–282.
[30] A. Minbashian, J.E. Bright, K.D. Bird, A comparison of artificial neural networks and multiple regression in the context of research on personality and work performance, Organ. Res. Methods 13 (3) (2010) 540–561.
[31] M.J. Somers, J.C. Casal, Using artificial neural networks to model nonlinearity: the case of the job satisfaction—job performance relationship, Organ. Res. Methods 12 (3) (2009) 403–417.
[32] A.L. Pablo, T. Reay, J.R. Dewald, A.L. Casebeer, Identifying, enabling and managing dynamic capabilities in the public sector, J. Manag. Stud. 44 (5) (2007) 687–708.
[33] J. Pfeffer, G. Salancik, External control of organizations—resource dependence perspective, in: *Organizational Behavior* 2, Routledge, 2015, pp. 373–388.
[34] J. Hessels, S.C. Parker, Constraints, internationalization and growth: a cross-country analysis of European SMEs, J. World Bus. 48 (1) (2013) 137–148.
[35] S. Badghish, Y.A. Soomro, Artificial intelligence adoption by SMEs to achieve sustainable business performance: application of technology–organization–environment framework, Sustainability 16 (5) (2024) 1864.
[36] L. Mei, T. Zhang, J. Chen, Exploring the effects of inter-firm linkages on SMEs' open innovation from an ecosystem perspective: an empirical study of Chinese manufacturing SMEs, Technol. Forecast. Soc. Change 144 (2019) 118–128.
[37] J. Hessels, S. Terjesen, Resource dependency and institutional theory perspectives on direct and indirect export choices, Small Bus. Econ. 34 (2010) 203–220.
[38] S. Sharma, G. Singh, N. Islam, A. Dhir, Why do SMEs adopt artificial intelligence-based chatbots? IEEE Trans. Eng. Manag. 71 (2024) 1773–1786.
[39] G. Ray, J.B. Barney, W.A. Muhanna, Capabilities, business processes, and competitive advantage: choosing the dependent variable in empirical tests of the resource-based view, Strat. Manag. J. 25 (1) (2004) 23–37.
[40] R. Grewal, R.J. Slotegraaf, Embeddedness of organizational capabilities, Decis. Sci. J. 38 (3) (2007) 451–488.
[41] P. Del Río, J. Carrillo-Hermosilla, T. Könnölä, M. Bleda, Resources, capabilities and competences for eco-innovation, Technol. Econ. Dev. Econ. 22 (2) (2016) 274–292.
[42] R. Suddaby, D. Coraiola, C. Harvey, W. Foster, History and the micro-foundations of dynamic capabilities, Strat. Manag. J. 41 (3) (2020) 530–556.
[43] C.C. Bitencourt, F. de Oliveira Santini, W.J. Ladeira, A.C. Santos, E.K. Teixeira, The extended dynamic capabilities model: a meta-analysis, Eur. Manag. J. 38 (1) (2020) 108–120.
[44] S.A. Zahra, H.J. Sapienza, P. Davidsson, Entrepreneurship and dynamic capabilities: a review, model and research agenda, J. Manag. Stud. 43 (4) (2006) 917–955.
[45] J. Heredia, M. Castillo-Vergara, C. Geldes, F.M.C. Gamarra, A. Flores, W. Heredia, How do digital capabilities affect firm performance? The mediating role of technological capabilities in the "new normal", Journal of Innovation & Knowledge 7 (2) (2022) 100171.
[46] N. Levallet, Y.E. Chan, Role of digital capabilities in unleashing the power of managerial improvisation, MIS Q. Exec. 17 (1) (2018) 1–21.
[47] N. Alsufyani, A.Q. Gill, Digitalisation performance assessment: a systematic review, Technol. Soc. 68 (2022) 101894.
[48] H. Gupta, A.K. Yadav, S. Kusi-Sarpong, S.A. Khan, S.C. Sharma, Strategies to overcome barriers to innovative digitalisation technologies for supply chain logistics resilience during pandemic, Technol. Soc. 69 (2022) 101970.
[49] M. Roux, S. Chowdhury, P. Kumar Dey, E. Vann Yaroson, V. Pereira, A. Abadie, Small and medium-sized enterprises as technology innovation intermediaries in sustainable business ecosystem: interplay between AI adoption, low carbon management and resilience, Ann. Oper. Res. (2023) 1–50.
[50] O. Branzei, I. Vertinsky, Strategic pathways to product innovation capabilities in SMEs, J. Bus. Ventur. 21 (1) (2006) 75–105.
[51] Á. Díaz-Chao, P. Ficapal-Cusí, J. Torrent-Sellens, Environmental assets, industry 4.0 technologies and firm performance in Spain: a dynamic capabilities path to reward sustainability, J. Clean. Prod. 281 (2021) 125264.
[52] A.B.L. de Sousa Jabbour, C.J.C. Jabbour, C. Foropon, M. Godinho Filho, When titans meet–Can industry 4.0 revolutionise the environmentally-sustainable manufacturing wave? The role of critical success factors, Technol. Forecast. Soc. Change 132 (2018) 18–25.
[53] B. Brenner, B. Hartl, The perceived relationship between digitalization and ecological, economic, and social sustainability, J. Clean. Prod. 315 (2021) 128128.
[54] R. Zhu, J. Zhang, Rebounding through the pandemic: towards the digitized and digitalized small hospitality business in China, Int. J. Contemp. Hospit. Manag. 33 (8) (2021) 2676–2694.
[55] A.S. Bharadwaj, O.A. El Sawy, P.A. Pavlou, N. Venkatraman, Digital business strategy: toward a next generation of insights, MIS Q. 37 (2) (2013) 471–482.
[56] A. Bharadwaj, O.A. El Sawy, P.A. Pavlou, N.V. Venkatraman, Digital business strategy: toward a next generation of insights, MIS Q. (2013) 471–482.
[57] L.B.P. Da Silva, R. Soltovski, J. Pontes, F.T. Treinta, P. Leitão, E. Mosconi, R. T. Yoshino, Human resources management 4.0: literature review and trends, Comput. Ind. Eng. 168 (2022) 108111.
[58] N.A. Sultan, Reaching for the "cloud": how SMEs can manage, Int. J. Inf. Manag. 31 (3) (2011) 272–278.
[59] F. Shrouf, G. Miragliotta, Energy management based on Internet of Things: practices and framework for adoption in production management, J. Clean. Prod. 100 (2015) 235–246.
[60] M. Javaid, A. Haleem, A. Vaish, R. Vaishya, K.P. Iyengar, Robotics applications in COVID-19: a review, Journal of Industrial Integration and Management 5 (4) (2020) 441–451.
[61] A.M. Baabdullah, A.A. Alalwan, E.L. Slade, R. Raman, K.F. Khatatneh, SMEs and artificial intelligence (AI): antecedents and consequences of AI-based B2B practices, Ind. Market. Manag. 98 (2021) 255–270.
[62] L. McMillan, L. Varga, A review of the use of artificial intelligence methods in infrastructure systems, Eng. Appl. Artif. Intell. 116 (2022) 105472.
[63] C. Zietsma, P. Groenewegen, D.M. Logue, C.R. Hinings, Field or fields? Building the scaffolding for cumulation of research on institutional fields, Acad. Manag. Ann. 11 (1) (2017) 391–450.
[64] Y. Benkler, The battle over the institutional ecosystem in the digital environment, Commun. ACM 44 (2) (2001) 84–90.
[65] J.A. Ekstrom, O.R. Young, Evaluating functional fit between a set of institutions and an ecosystem, Ecol. Soc. 14 (2) (2009) 1–18.
[66] R. Greenwood, M. Raynard, F. Kodeih, E.R. Micelotta, M. Lounsbury, Institutional complexity and organizational responses, Acad. Manag. Ann. 5 (1) (2011) 317–371.
[67] Eurostat, Flash Eurobarometer 486: SMEs, start-ups, scale-ups and entrepreneurship. http://data.europa.eu/euodp/en/data/dataset/S2244_486_ENG, 2022.
[68] P.M. Podsakoff, S.B. MacKenzie, J.Y. Lee, N.P. Podsakoff, Common method biases in behavioral research: a critical review of the literature and recommended remedies, J. Appl. Psychol. 88 (5) (2003) 879.
[69] C.F. Arranz, V. Sena, C. Kwong, Institutional pressures as drivers of circular economy in firms: a machine learning approach, J. Clean. Prod. 355 (2022) 131738.
[70] Q. Wang, Artificial neural networks as cost engineering methods in a collaborative manufacturing environment, Int. J. Prod. Econ. 109 (2007) 53–64.
[71] N. Arranz, J.C. Fernandez de Arroyabe, Efficiency in technological networks, an approach from artificial neural networks (ANN), Int. J. Manag. Sci. Eng. Manag. 5 (2010) 453–460.
[72] J. Ciurana, G. Quintana, M.L. Garcia-Romeu, Estimating the cost of vertical high-speed machining centers, a comparison between multiple regression analysis and the neural approach, Int. J. Prod. Econ. 115 (2008) 171–178.
[73] K. Mohrotra, Elements of Artificial Neural Networks, MIT Press, Cambridge, MA, 1994.
[74] Y. Chen, J. Li, J. Zhang, Digitalisation, data-driven dynamic capabilities and responsible innovation: an empirical study of SMEs in China, Asia Pac. J. Manag. (2022) 1–41.
[75] O.M. Ibrahim, A comparison of methods for assessing the relative importance of input variables in artificial neural networks, J. Appl. Sci. Res. 9 (11) (2013) 5692–5700.

Ignacio Fernandez de Arroyabe is Cyber Risk Manager in Lloyds Bank Commercial Banking (UK). He has worked in cybersecurity at Jaguar Land Rover in the UK. His research interests are in cybersecurity risk management in firms. He is a PhD candidate in cybersecurity at the Computer Science Department at Loughborough University, UK.

Carlos F.A. Arranz is a Lecturer in Business Operations at the University of Greenwich. His main research interest centres on the application of Machine Learning methods to the analysis of business, particularly on the implementation of Circular Economy Models. He holds a PhD in Business Analytics from Essex Business School (University of Essex), an MRes in International Political Economy from the London School of Economics and Political Science (LSE), and an MRes in Economics and Finance from the Université du Luxembourg. Before that, he received a BSc in Economics and Business Economics (International Economics Studies Specialisation) from Maastricht University.

Marta F. Arroyabe is a Reader and Deputy Head of the Strategy Operations and Entrepreneurship (SOE) Group at Essex Business School. Marta's research focuses on four primary areas: innovation, digitalisation & cybersecurity, environmental management, and entrepreneurship. In the area of innovation, her research aims to understand the development and implementation of innovation in firms and explores firms' innovation decisions and strategies. In digitalisation and cybersecurity, her research investigates the intersection of IT security, digital transformation, and cybersecurity resilience in SMEs. Her research investigates the digitalisation dynamics in SMEs, emphasizing the multifaceted nature of drivers, interactions, and the overall decision-making process within the evolving landscape of Industry 4.0. Her research also delves into the strategic decision-making behind cybersecurity investments in SMEs and provides an understanding of how cybersecurity challenges, capabilities and organizations' external environment

intersect with the broader landscape of digital transformation and strategic decision-making within SMEs, aiming to shed light on practical aspects that can enhance resilience and decision-making in the face of evolving cyber threats. In the area of environmental management, she primarily focuses on two topics, eco-innovation and circular economy, where she studies business responses to improving environmental performance and to increasing societal concerns for the environment. Her research explores the development of eco-innovation and circular economy business models in firms and the impact of these on firms' performance. Finally, in the area of entrepreneurship, her research primarily focuses on entrepreneurial education and entrepreneurial intention. Her work aims to understand to which extent entrepreneurial education in higher education institutions (such as universities) spurs students' entrepreneurial intention and fosters entrepreneurial activity. She has published her work in *"Journal of Business Research", "R&D Management", "Technovation", "Studies in Higher Education", "British Journal of Management", "European Journal of Innovation Management", "Technology Analysis and Strategic Management", "Journal of Cleaner Production", "Technological Forecasting and Social Change", "Journal of Computer Information Systems" or "Computers and Security".*

Juan Carlos. Fernandez de Arroyabe is a Professor at Essex Business School (University of Essex). His research interests include joint R&D projects, R&D networks, and complex technological systems. He is the author or co-author of numerous papers published in the *British Journal of Management, IEEE Transaction Engineering Management, the Complexity, Technovation, Studies in Higher Education, Journal Cleaner Production, Business Strategy and The Environment, Journal Business Research; Emergence: Organization and Complexity, Technological Forecasting Social Change, Journal of Enterprise Information Management, International Small Business Journal, European Journal of Work and Organisational Psychology, Scandinavian Journal of Tourism, and Industry Higher Education*. Also, he is Associate Editor of the Journal of Entrepreneurship in Emerging Economies and a member of the Editorial Board of Technological Forecasting Social Change.