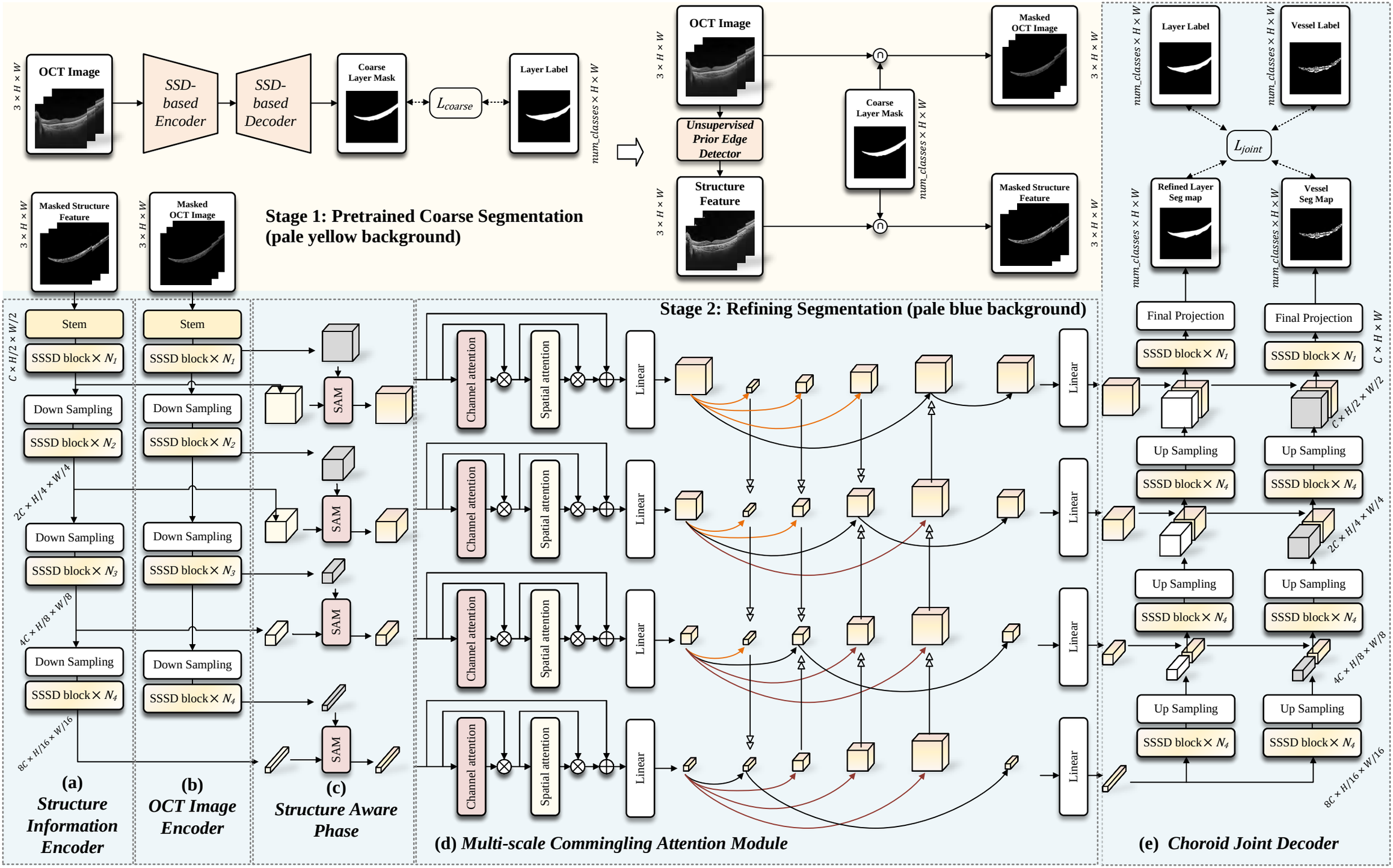
OCT Image
SSD-based Encoder
SSD-based Decoder
Coarse Layer Mask
L_{coarse}
Layer Label
Stage 1: Pretrained Coarse Segmentation (pale yellow background)
Masked Structure Feature
Masked OCT Image
Unsupervised Prior Edge Detector
Structure Feature
Masked OCT Image
Masked Structure Feature
Layer Label
Vessel Label
L_{joint}
Refined Layer Seg map
Vessel Seg Map
Stage 2: Refining Segmentation (pale blue background)
Stem
SSSD block× N_1
Down Sampling
SSSD block× N_2
SSSD block× N_3
SSSD block× N_4
SAM
Channel attention
Spatial attention
Linear
Final Projection
Up Sampling
(a) Structure Information Encoder
(b) OCT Image Encoder
(c) Structure Aware Phase
(d) Multi-scale Commingling Attention Module
(e) Choroid Joint Decoder
Interpolate and Convolution
Avg Pooling and Convolution
Structure Aware Module
Pixel Addition
Hardmard Production
Identity
Hardmard Production with the Pointed Tensor
N_i Cascaded SSSD Blocks
Tensor Intersection