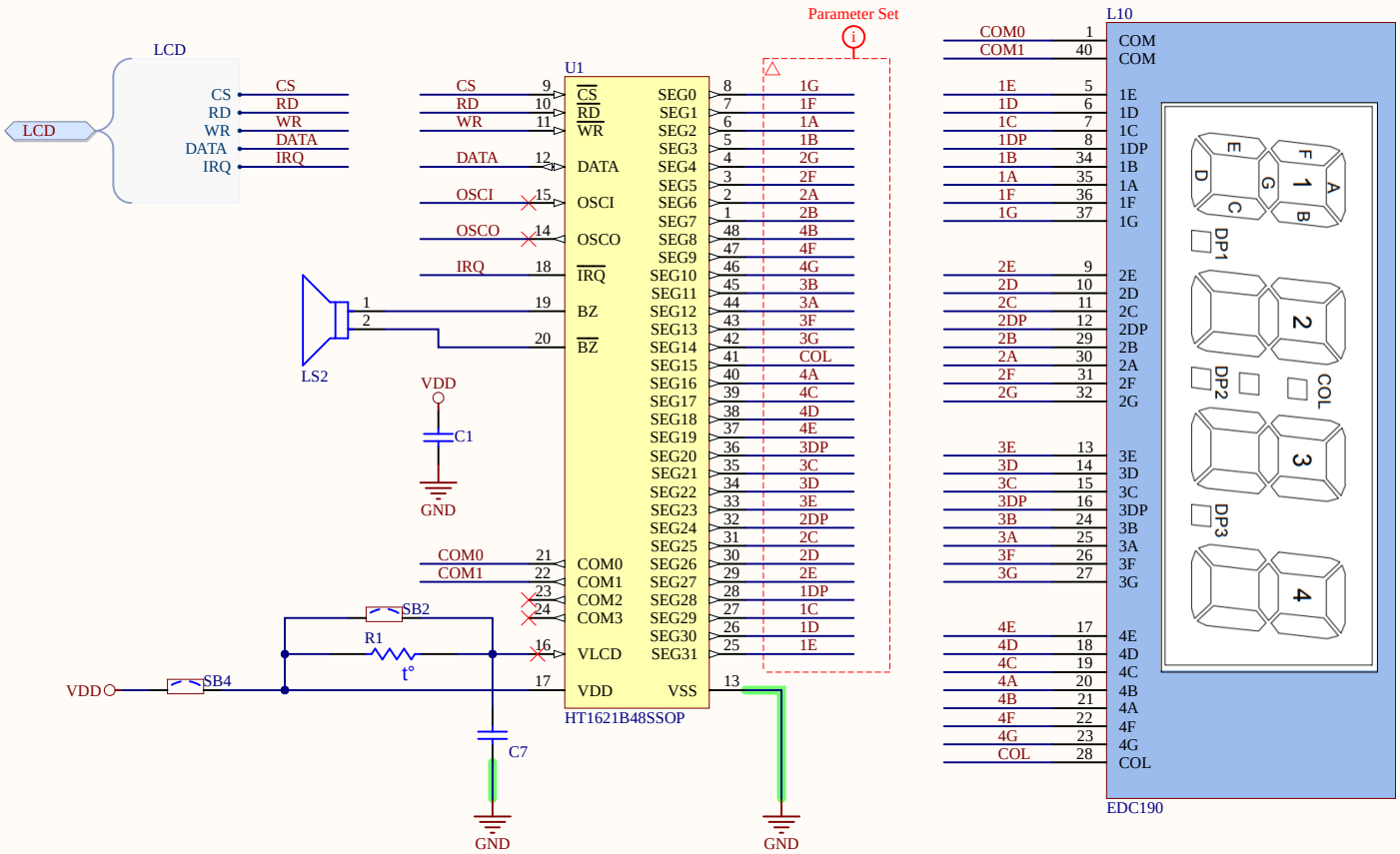
LCD
CS
RD
WR
DATA
IRQ
U1
HT1621B48SSOP
LS2
VDD
C1
GND
SB2
R1
t°
SB4
C7
Parameter Set
L10
EDC190
COM0
COM1
COM
1E
1D
1C
1DP
1B
1A
1F
1G
2E
2D
2C
2DP
2B
2A
2F
2G
3E
3D
3C
3DP
3B
3A
3F
3G
4E
4D
4C
4A
4B
4F
4G
COL
DP1
DP2
DP3

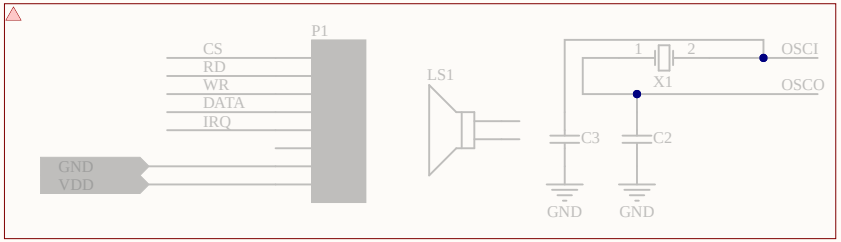
P1
CS
RD
WR
DATA
IRQ
GND
VDD
LS1
X1
OSCI
OSCO
C3
C2
GND
GND

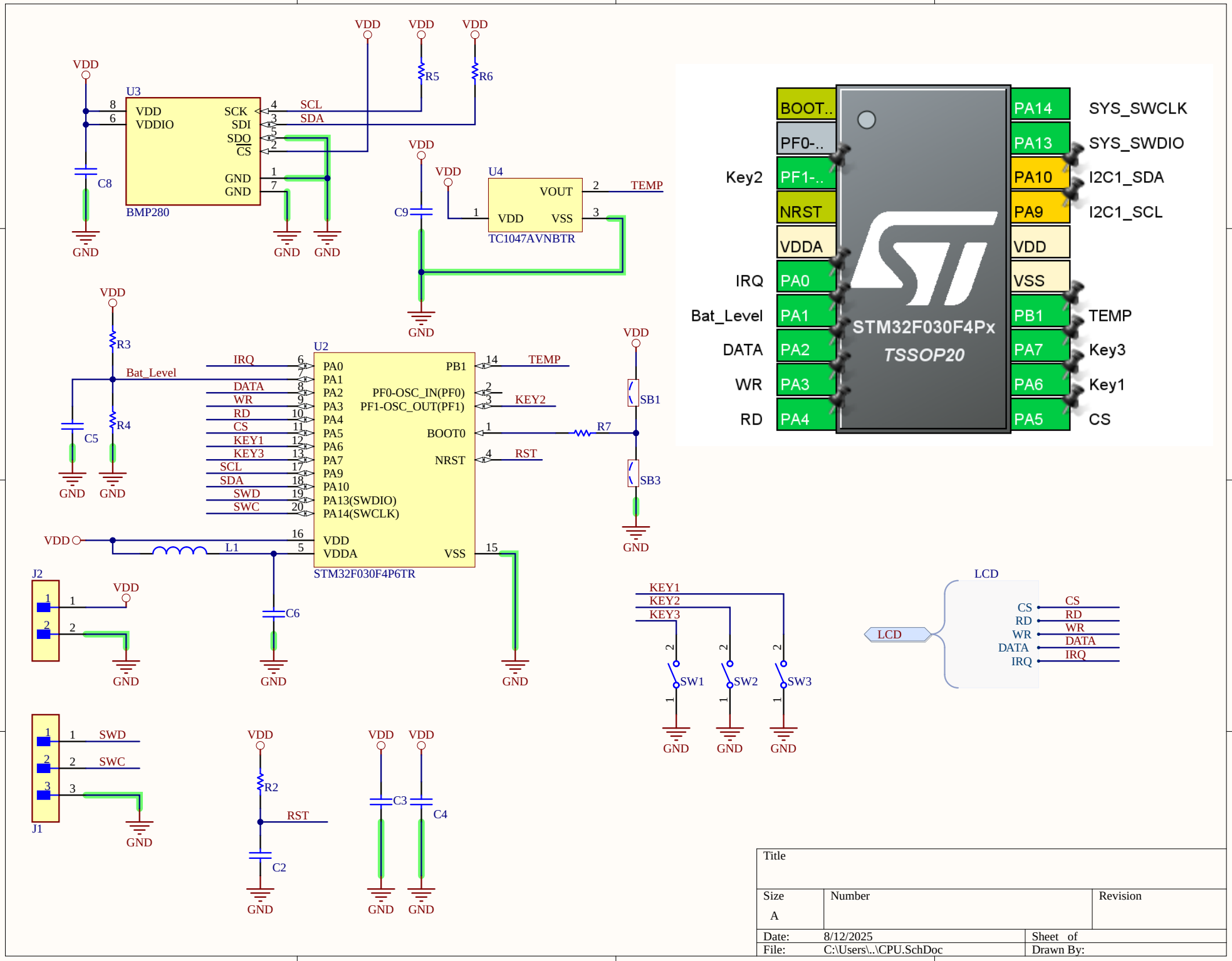

Title		
Size A	Number	Revision
Date: 8/12/2025		Sheet of
File: C:\Users\..\CPU.SchDoc		Drawn By: