A Bayesian Method to Mitigate the Effects of Unmodelled Time-Varying Systematics for 21-cm Cosmology Experiments

Christian J. Kirkham [1,2]★ Dominic J. Anstey [1,2]† and Eloy de Lera Acedo [1,2]‡
[1]Astrophysics Group, Cavendish Laboratory, J. J. Thomson Avenue, Cambridge, CB3 0HE, UK
[2]Kavli Institute for Cosmology, Madingley Road, Cambridge, CB3 0HA, UK

arXiv:2310.17975v1 [astro-ph.CO] 27 Oct 2023

Accepted XXX. Received YYY; in original form ZZZ

ABSTRACT

Radio observations of the neutral hydrogen signal from the Cosmic Dawn and Epoch of Reionisation have helped to provide constraints on the properties of the first stars and galaxies. Since this global 21-cm cosmological signal from the Cosmic Dawn is effectively constant on observing timescales and since effects resulting from systematics will vary with time, the effects of these systematics can be mitigated without the need for a model of the systematic. We present a method to account for unmodelled time-varying systematics in 21-cm radio cosmology experiments using a squared-exponential Gaussian process kernel to account for correlations between time bins in a fully Bayesian way. We find by varying the model parameters of a simulated systematic that the Gaussian process method improves our ability to recover the signal parameters by widening the posterior in the presence of a systematic and reducing the bias in the mean fit parameters. When varying the amplitude of a model sinusoidal systematic between 0.25 and 2.00 times the 21-cm signal amplitude and the period between 0.5 and 4.0 times the signal width, we find on average a 5% improvement in the root mean squared error of the fitted signal. We can use the fitted Gaussian process hyperparameters to identify the presence of a systematic in the data, demonstrating the method's utility as a diagnostic tool. Furthermore, we can use Gaussian process regression to calculate a mean fit to the residuals over time, providing a basis for producing a model of the time-varying systematic.

Key words: methods: data analysis – cosmology: dark ages, reionization, first stars – cosmology: early Universe

1 INTRODUCTION

One of the most promising probes of the physics of the Comsic Dark Ages, Cosmic Dawn and the Epoch of Reionisation is 21-cm cosmology (Furlanetto et al. 2006). Approximately 379,000 years after the Big Bang the universe underwent a phase change known as 'recombination' whereby the ionised electrons and protons combined to fill the universe with neutral hydrogen (HI), the redshifted afterglow of which can be observed as the Cosmic Microwave Background (CMB) radiation (Planck Collaboration et al. 2020). This HI gas has a hyperfine transition which emits and absorbs radiation at a wavelength of $\lambda = 21$ cm or a frequency of $\nu = 1420$ MHz in the rest frame. We can define a statistical 'spin temperature' which is related to the occupancy of the excited and neutral states of the HI gas. This signal is measured relative to the CMB temperature and is either in absorption or emission based on the coupling between the gas temperature, the background radiation and the spin temperature (Wouthuysen 1952; Field 1959; Furlanetto et al. 2006).

There are several low-frequency radio experiments which are attempting to detect the cosmological 21-cm signal. Interferometers such as HERA (DeBoer et al. 2017), LOFAR (van Haarlem et al. 2013), the MWA (Tingay et al. 2013) and the the future SKA Observatory (Dewdney et al. 2009) use arrays of telescopes to measure the spatial power spectrum of fluctations in the early universe. Experiments which measure the global sky-averaged 21-cm signal such as EDGES (Bowman et al. 2008), SARAS (Singh et al. 2018, 2022), LEDA (Price et al. 2018), PRIZM (Philip et al. 2019), MIST (Monsalve et al. 2023) and REACH (de Lera Acedo et al. 2022) are working to place constraints on the physics of the Cosmic Dawn and the Epoch of Reionisation.

The only detection of the cosmological global 21-cm signal claimed so far is by the EDGES experiment (Bowman et al. 2018). This experiment is made up of two low-band dipole antennae located in the Murchison Radio Astronomy Observatory (MRO) in Western Australia which operate between 50 and 100 MHz (Bowman et al. 2008). Since the detected signal had an abnormally flat and deep profile – at least two times deeper than previous predictions (Reis et al. 2021) – concerns were raised regarding the validity of the analysis methods and the effect of systematics (Hills et al. 2018; Singh & Subrahmanyan 2019; Sims & Pober 2020). Another 21-cm global signal experiment, SARAS3 (Nambissan et al. 2021), recently placed constraints on the 21-cm signal, rejecting the EDGES detection with 95.3% confidence (Singh et al. 2022).

Hills et al. (2018) found issue with the foreground modelling method used by the EDGES team. By comparing the EDGES foreground model with a physically motivated non-linear expression,

★ E-mail: cjk55@cam.ac.uk
† E-mail: da401@cam.ac.uk
‡ E-mail: ed330@cam.ac.uk

© 2023 The Authors

they found that the optical depth of the ionosphere and the electron temperature are both negative indicating that the foreground fit is unphysical. They suggest that these unphysical values result from unaccounted for systematics in the data. Removing a 12.5 MHz sine wave from the data allows good fit to a broad Gaussian absorption profile, obtained with five foreground parameters. It is proposed that a sinusoid in the data – which can be explained by any number of instrumental systematics (see Section 1.1) – is what resulted in the Bowman et al. (2018) absorption profile with a flattened bottom which is consistent with the results of Sims & Pober (2020).

Others have interpreted the EDGES signal as a need to introduce new exotic physics, as current theories cannot explain why there would be such a large contrast between the CMB temperature and the gas kinetic temperature. One such theory proposes dark matter of which a small fraction is millicharged e.g. Barkana (2018), which would scatter of the baryonic matter, providing an additional cooling mechanism. An alternative theory does not invoke new physics but rather suggests that there is an unaccounted for radio background (Feng & Holder 2018). This suggestion may be supported by measurements by ARCADE-2 and LWA (Fixsen et al. 2011; Dowell & Taylor 2018).

In this work we will investigate the effects of time-varying systematics and test a method to help identify systematics and mitigate their effects using Gaussian processes. In particular, we will perform this investigation in the context of the REACH global experiment (de Lera Acedo et al. 2022). In Section 2 we will present the standard REACH pipeline and likelihood, introduce the Gaussian process likelihood and demonstrate how they could be used to perform time regression. In Section 3 we present the results of introducing simulated systematics to the data and compare the signal recovery of both the standard and Gaussian process methods. In Section 4 we present the conclusions of the investigation.

1.1 Systematics in the REACH System

While all best efforts have been made to calibrate the REACH instrument (Roque et al. 2021; Anstey et al. 2021, 2022; Bevins et al. 2021; Scheutwinkel et al. 2022; Razavi-Ghods et al. 2023), it might be inevitable that some systematics will end up in the final data so it is important that we understand and attempt to mitigate the effects of these unknown systematics. As was indicated in Hills et al. (2018) and Sims & Pober (2020), not accounting for systematics can potentially have a large impact on your final fit. In particular for this investigation we will have to consider the effects of the galactic foreground moving over the sky and the beam, and the temperature changing over time as both will potentially introduce systematics in the data that will vary with time.

Figure 1 shows a schematic of the REACH antenna and receiver system. Here, $D(\nu, \Omega)$ refers to the directivity of the antenna, $\Gamma_{\mathrm{A}}(t, \nu)$ is the impedence of the antenna, $\Gamma_{\mathrm{RX}}(t, \nu)$ is the impedence of the receiver, $G_{\mathrm{RX}}(t, \nu)$ is the gain of the Low Noise Amplifier (LNA), $\eta(t, \nu)$ is the radiation efficiency of the antenna, $T_{\mathrm{A}}(\nu)$ is the antenna temperature and $T_{\mathrm{system}}(\nu)$ refers to system temperature that is produced by the receiver. These components combine to make the time-dependent antenna temperature (Cumner et al. 2022),

$$T_{\mathrm{ant}}(\nu, t) = \frac{1}{4\pi} \int_{\Omega} D(\nu, \Omega)\eta(\nu)(T_{\mathrm{sky}}(t, \nu, \Omega) + T_{21}(\nu))\, \mathrm{d}\Omega \tag{1}$$

which can be integrated to give the time-averaged antenna temperature,

$$T_{\mathrm{A}} = \int_{t} T_{\mathrm{ant}}(\nu, t)\, \mathrm{d}t. \tag{2}$$

Including impedence reflections and the noise term, $N(t, \nu, \Gamma_{\mathrm{A}})$, gives the system temperature,

$$T_{\mathrm{system}}(\nu) = \int_{t} (T_{\mathrm{ant}}(1 - |\Gamma_{\mathrm{A}}|^2) G_{\mathrm{RX}}(t, \nu) + N(t, \nu, \Gamma_{\mathrm{A}}))\, \mathrm{d}t. \tag{3}$$

The $1 - |\Gamma_{\mathrm{A}}|^2$ term arises from unmatched impedence between the antenna and the receiver. Each cable of the antenna has its own impedence value and if there is a difference in impedence at the interface between the two cables or devices then electrical signals will be partially reflected off this interface. As a result, a standing wave may form in the cables producing a sinusoidal systematic in the data.

Cable reflections can also produce sinusoidal systematics from noise sources such as the LNA noise or sky temperature noise. This is problematic since systematics will remain in the averaged data while noise can usually be integrated down, with the amplitude of the noise scaling as $1/\sqrt{t_{\mathrm{int}}}$ where t_{int} is the integration time of the instrument (Kraus et al. 1986). Similarly, radio-frequency interference (RFI) – which can usually be flagged (Leeney et al. 2022) and the relevant frequency bin excised – can be made sinusoidal when it passes through a system with unmatched impedences.

Other systematics can arise from incorrectly modelling the directivity pattern of the antenna or the sky temperature, the residuals of which could be approximately sinusoidal in form (Price et al. 2018). The REACH pipeline uses the foreground fitting procedure to correct for this somewhat, although limitations – such as the antenna having such a high chromaticity that it exceeds the corrective abilities of the foreground fitting – mean that this cannot be done perfectly accurately (Anstey et al. 2021). Reflections from the soil due to its dielectric properties can also result in sinusoidal systematics as standing waves form between the antenna and the ground (Bevins et al. 2021, 2022). This is particularly problematic as the exact dielectric constant of the soil is unknown and, as such is difficult to be modelled accurately (Pattison et al. 2023). Soil reflections are somewhat mitigated by the inclusion of a 25 m by 25 m square ground plane underneath the antenna, pictured in figure 2, although finite ground planes can introduce new standing waves (Bolli et al. 2020).

Of particular interest to this investigation is the question of what happens if the systematic changes with time. An example of this effect was found by the LEDA team who discovered that the pattern of oscillations changed after rainfall (Price et al. 2018), potentially resulting from the soil's moisture content changing the dielectric properties of the ground. Changing systematics could also arise from cable reflections which reflect the foreground power and, as such, results in a sinusoidal systematic whose amplitude is modulated over time as the Earth rotates. As impedence depends on temperature and components may flex as they warm or cool, the environmental conditions can also affect systematics introduced by the receiver (Cumner et al. 2022).

2 METHODS

2.1 Bayesian Inference

Bayesian inference is a statistical method which can be used to infer the probability distribution of an unknown variable from some given dataset and as such is a useful tool for parameter estimation. The method relies on applying Bayes' theorem for inverting conditional probabilities which can be expressed as

$$P(\theta|\mathbf{D}, \mathcal{M}) = \frac{P(\mathbf{D}|\theta, \mathcal{M}) \cdot P(\theta|\mathcal{M})}{P(\mathbf{D}|\mathcal{M})}, \tag{4}$$

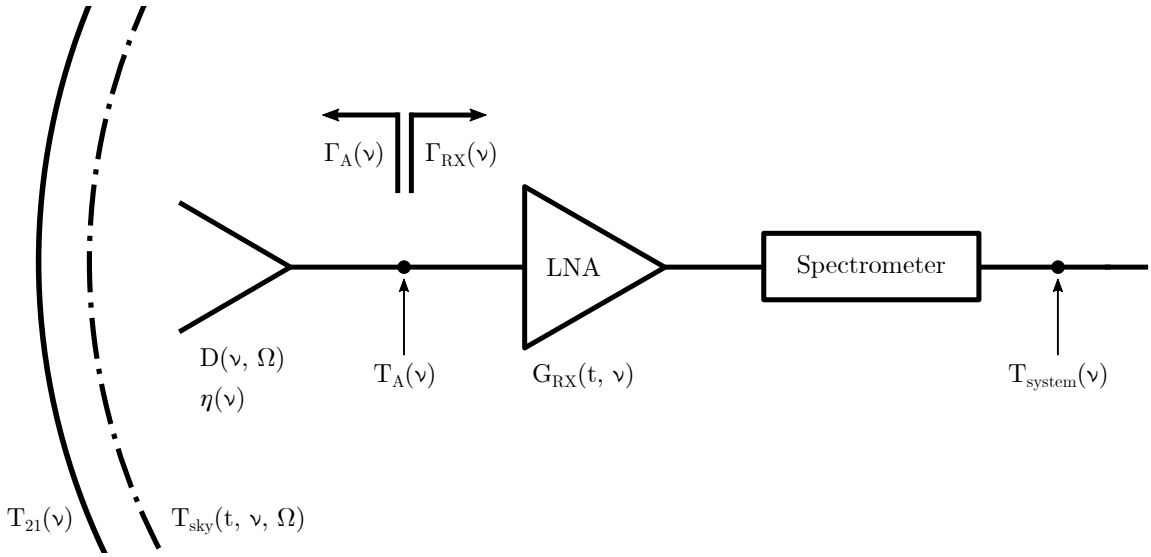

Figure 1. A schematic of the REACH antenna and receiver. Adapted from Cumner et al. (2022).

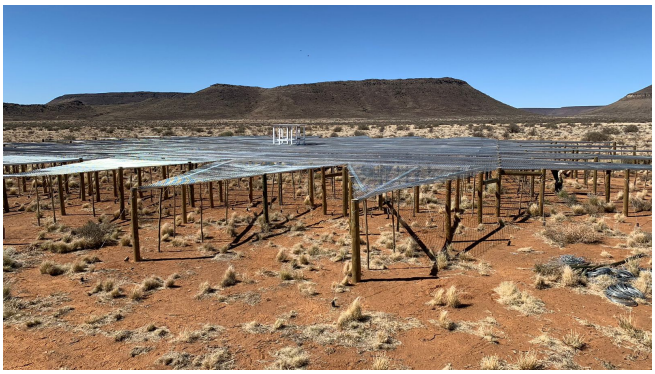

Figure 2. The REACH antenna and ground plane in the Karoo desert in South Africa. The size of the ground plane is 25m by 25m with a 5m serrations and is built 1m above the ground.

where θ are the parameters of the model, $\mathcal{M}$, that we're trying to fit and $\mathbf{D}$ is the vector of data points (Sivia 2006). $P(\theta|\mathcal{M})$, or $\pi(\theta)$, is known as the 'prior distribution' and represents our prior knowledge of the parameter probability distribution. $P(\mathbf{D}|\theta, \mathcal{M})$, or $\mathcal{L}(\theta)$, is known as the 'likelihood' and represents the probability of observing the dataset given the chosen model and parameters are true. $P(\theta|\mathbf{D}, \mathcal{M})$, or $\mathcal{P}(\theta)$, is known as the 'posterior distribution' and is the probability of the parameters given the data and the model, and is inferred from the prior and likelihood distributions. Finally, $P(\mathbf{D}|\mathcal{M})$ is called the 'Bayesian evidence', sometimes given as $\mathcal{Z}$, and can be used as a goodness-of-fit measure for model comparison.

The likelihood function is an expression of how likely the data is given the model and its form depends on the probability distribution of the data. If the data is randomly distributed according to a multivariate Gaussian distribution, we use a Gaussian likelihood function of the form

$$\mathcal{L}(\theta) = \frac{1}{\sqrt{(2\pi)^n |\mathbf{C}|}} \exp\left(-\frac{1}{2}(\mathbf{D} - \mathbf{M}(\theta))^T \boldsymbol{C}^{-1} (\mathbf{D} - \mathbf{M}(\theta))\right), \quad (5)$$

where $\mathbf{M}(\theta)$ is the model function, n is the length of the data, $\mathbf{D}$ and $\mathbf{C}$ is the covariance matrix.

The Bayesian evidence can then be calculated by integrating over the parameter space, a technique known as 'marginalising', as

$$\mathcal{Z} = P(\mathbf{D}|\mathcal{M}) = \int \mathcal{L}(\theta) \cdot \pi(\theta)\, \mathrm{d}\theta. \quad (6)$$

To calculate the evidence and sample the posterior we use the nested sampler PolyChord (Handley et al. 2015a,b).

2.2 REACH Pipeline

The REACH pipeline uses a framework for jointly modelling galactic foregrounds and correcting for chromaticity (Anstey et al. 2021). As the hexagonal dipole is not an achromatic beam, the antenna has a directivity pattern, $D(\Omega, \nu)$ which depends on the direction of the observation, Ω and the radio frequency, ν. This is then convolved with the time-dependent sky temperature, $T_{\rm sky}(\Omega, \nu, t)$, at time of observation, t, to get the observed antenna temperature,

$$T_{\rm data}(\nu) = \frac{1}{4\pi} \int_0^{4\pi} D(\Omega, \nu) \int_{t_{\rm start}}^{t_{\rm end}} T_{\rm sky}(\Omega, \nu, t)\, \mathrm{d}t \mathrm{d}\Omega + \hat{\sigma}, \quad (7)$$

where $\hat{\sigma}$ is noise, assumed here to be uncorrelated Gaussian noise. The observed sky temperature model used in the pipeline is made up three main components,

$$T_{\rm sky}(\Omega, \nu, t) = T_{\rm fg}(\Omega, \nu, t) + T_{\rm sg}(\nu) + T_{\rm CMB}, \quad (8)$$

where $T_{\rm fg}(\Omega, \nu, t)$ is the galactic foreground temperature, $T_{\rm sg}(\nu)$ is the temperature of the global 21-cm signal and $T_{\rm CMB} = 2.73$ K is the CMB temperature.

Due to synchrotron radiation emitted by hot gas in the galaxy, the galactic foreground emission must be modelled as it is $\sim 10^4$ times larger in magnitude than the 21-cm signal (Shaver et al. 1999). Since there are no foreground emission maps in the REACH band, the pipeline uses a global sky map (GSM) of antenna temperature at 230 MHz (De Oliveira-Costa et al. 2008). While the full REACH pipeline decomposes the sky into regions of uniform spectral index, to reduce computational time we simulate the sky as having a single spectral index, $\beta = -2.55$. The resulting sky map in the REACH band is then found as

$$T_{\rm fg}(\Omega, \nu) = (T_{230}(\Omega) - T_{\rm CMB}) \left(\frac{\nu}{230\ \mathrm{MHz}}\right)^{-\beta}, \quad (9)$$