SHUTDOWN Circuit

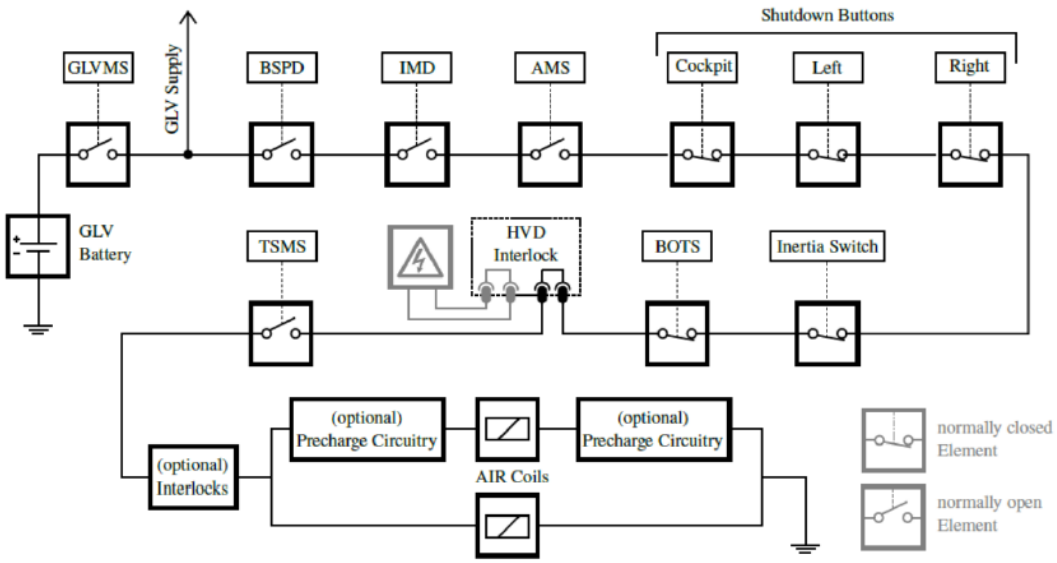

Figure 19: Explanatory example schematic of the required shutdown circuit

BSPD

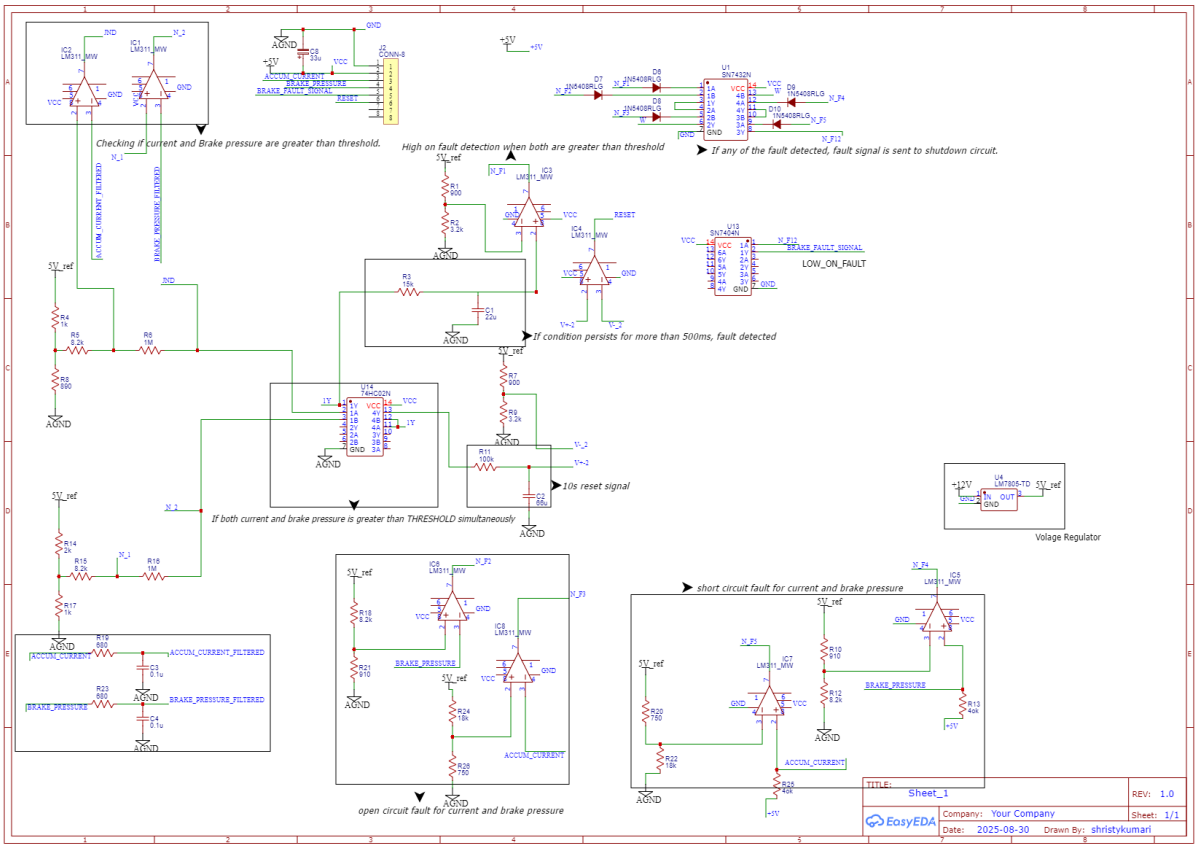

IMD

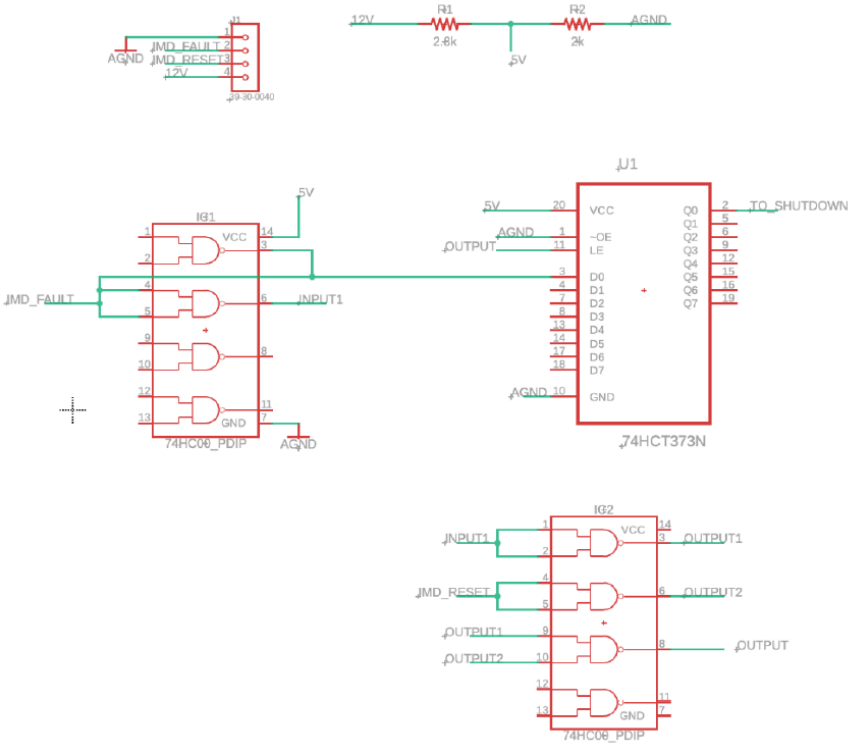
J1
AGND
JMD_FAULT
JMD_RESET
12V
R1
2.8k
R2
2k
5V
U1
IG1
VCC
JMD_FAULT
INPUT1
GND
74HC08_PDIP
OUTPUT
~OE
LE
D0
D1
D2
D3
D4
D5
D6
D7
Q0
Q1
Q2
Q3
Q4
Q5
Q6
Q7
TO_SHUTDOWN
74HCT373N
IG2
OUTPUT1
OUTPUT2
OUTPUT

AMS

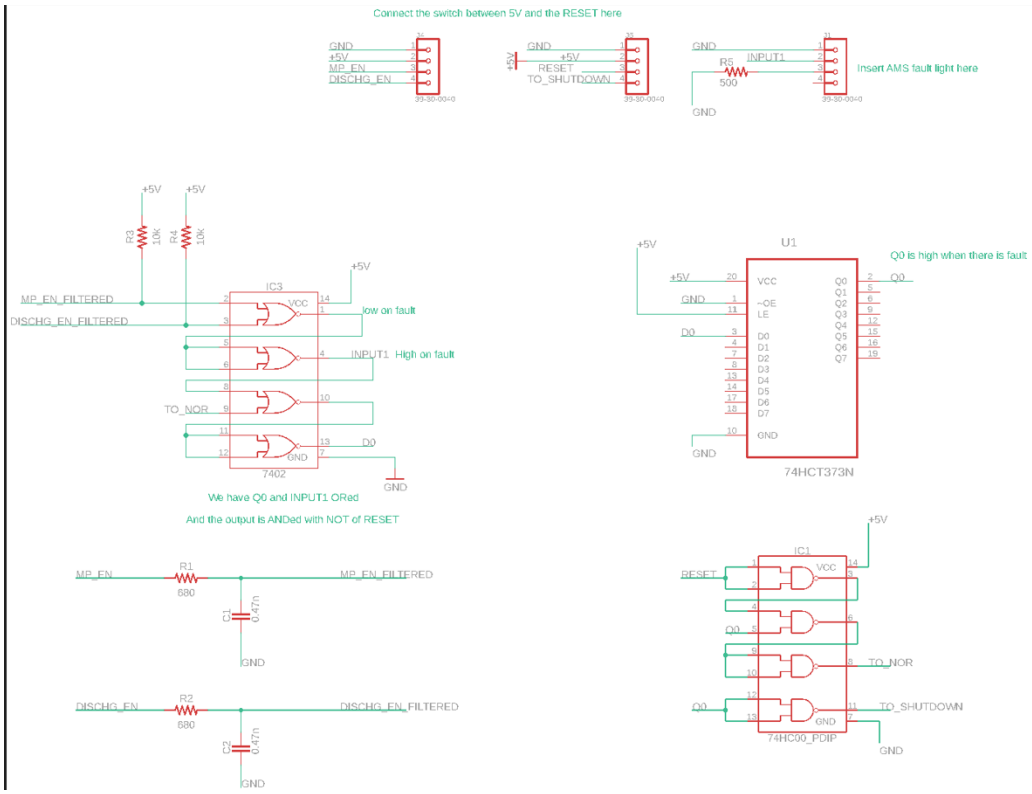
Connect the switch between 5V and the RESET here
GND
+5V
MP_EN
DISCHG_EN
RESET
TO_SHUTDOWN
INPUT1
R5
500
Insert AMS fault light here
R3
10k
R4
10k
IC3
MP_EN_FILTERED
DISCHG_EN_FILTERED
low on fault
INPUT1 High on fault
TO_NOR
D0
7402
We have Q0 and INPUT1 ORed
And the output is ANDed with NOT of RESET
U1
Q0 is high when there is fault
Q0
74HCT373N
MP_EN
R1
680
C1
0.47n
MP_EN_FILTERED
DISCHG_EN
R2
680
C2
0.47n
DISCHG_EN_FILTERED
IC1
RESET
TO_NOR
TO_SHUTDOWN
74HC00_PDIP

Precharge

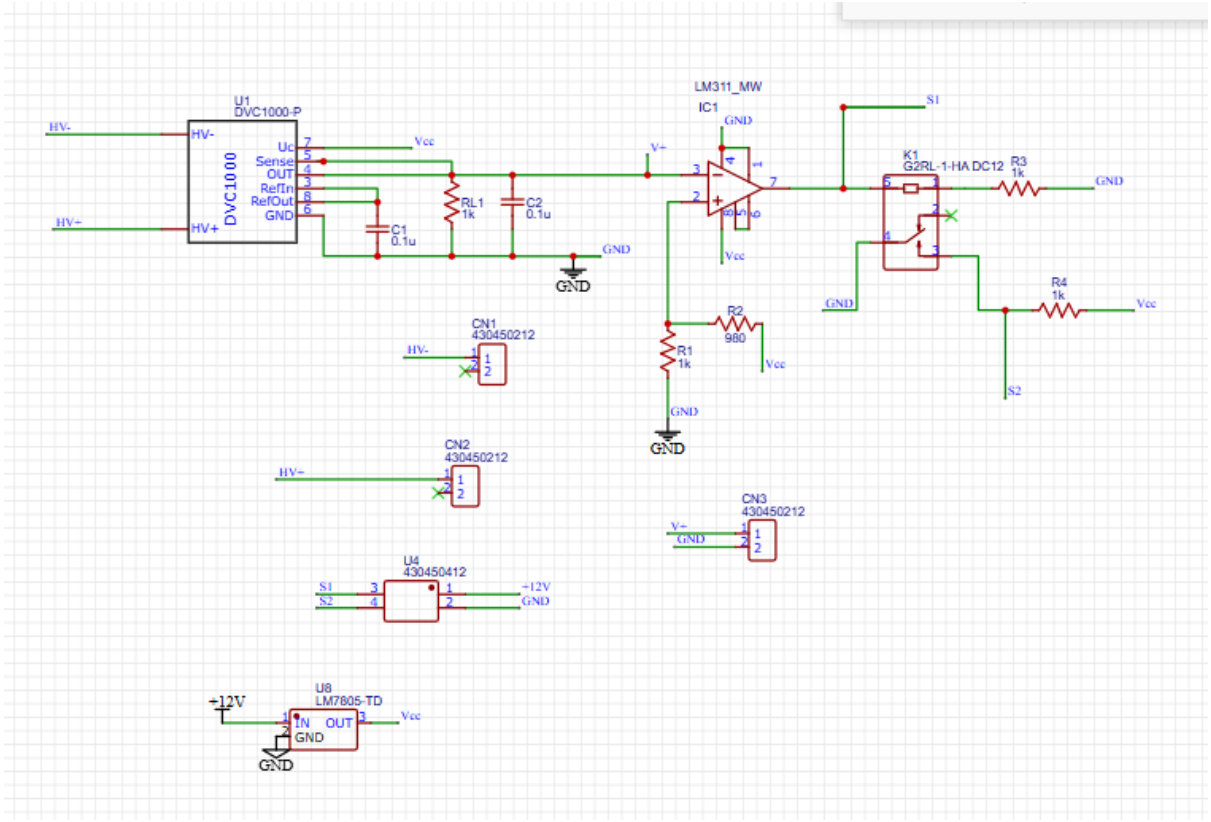

Discharge

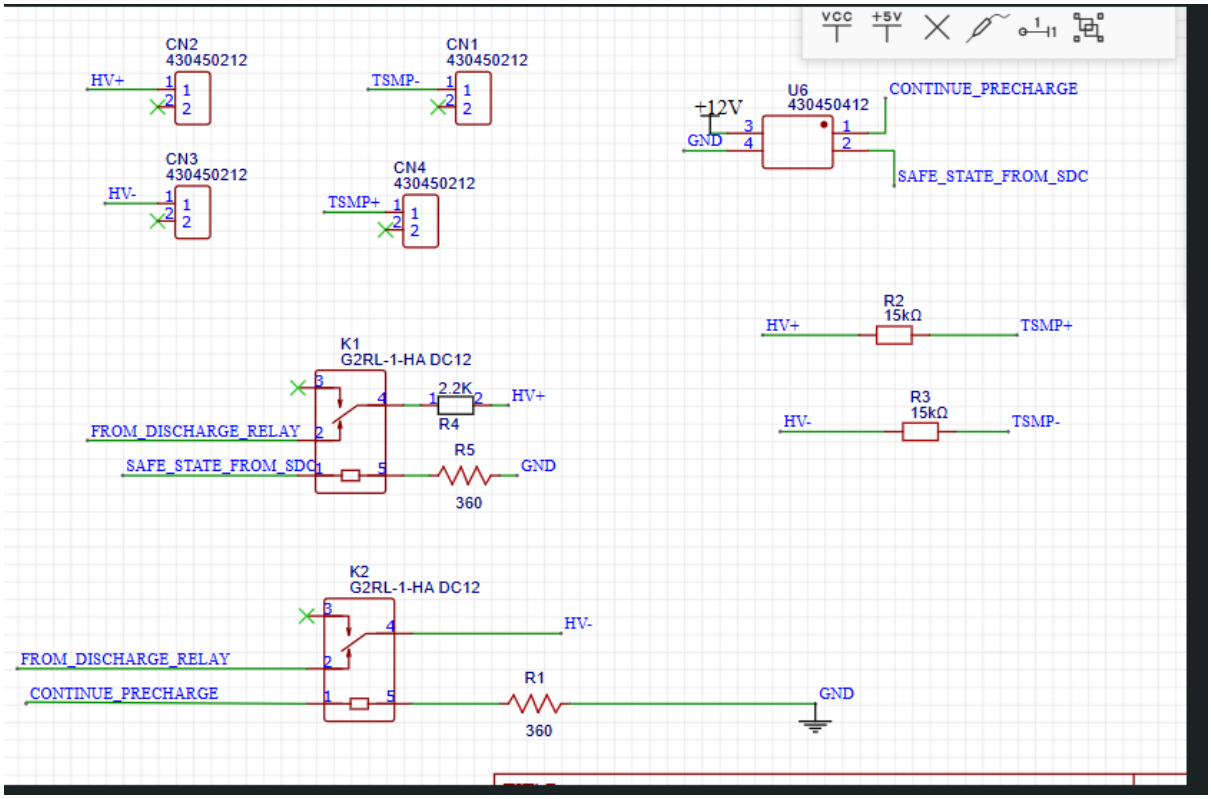

TSAL(green)

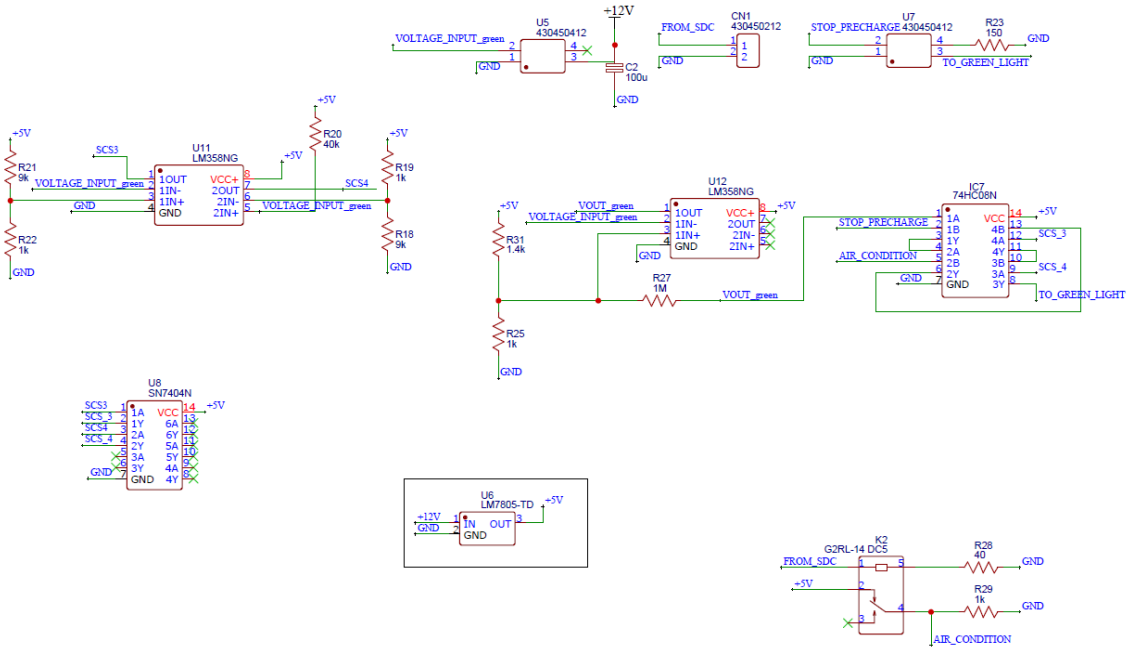

TSAL(red)

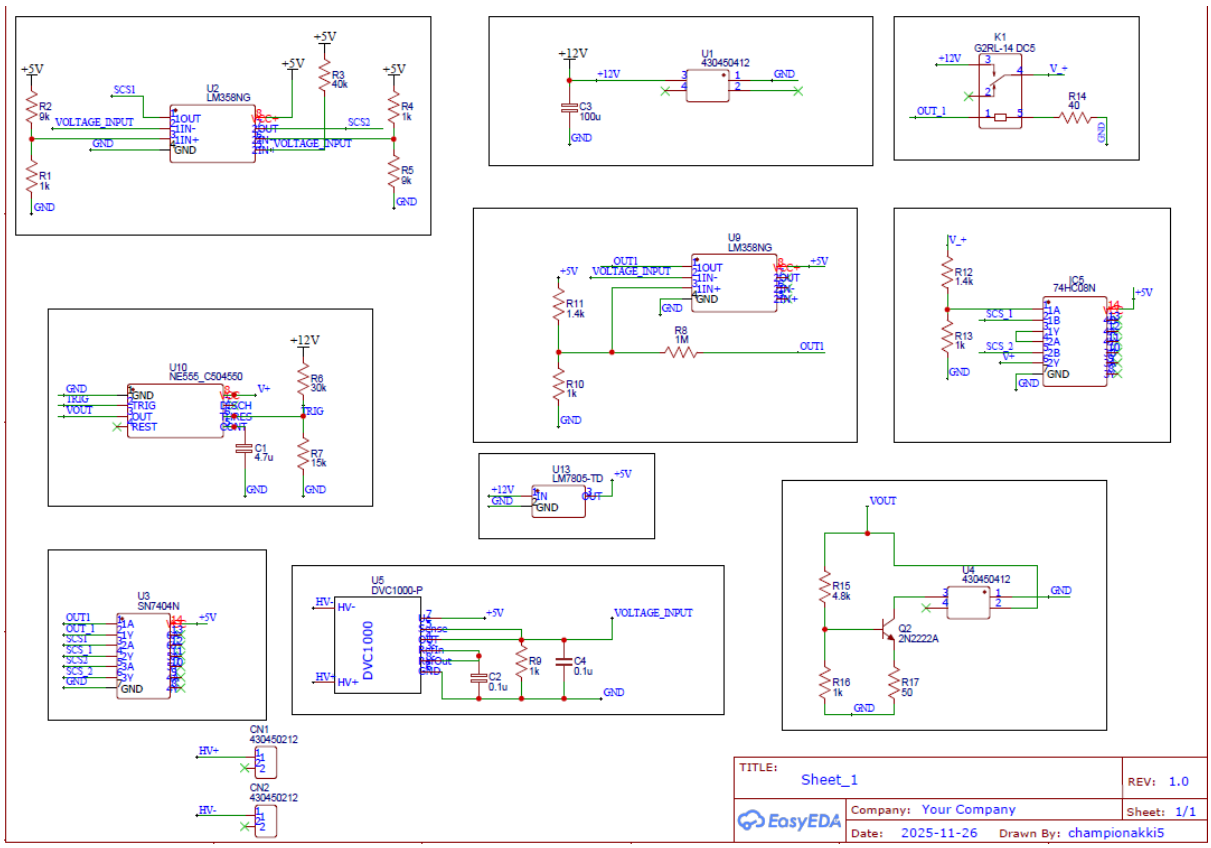

RTDS

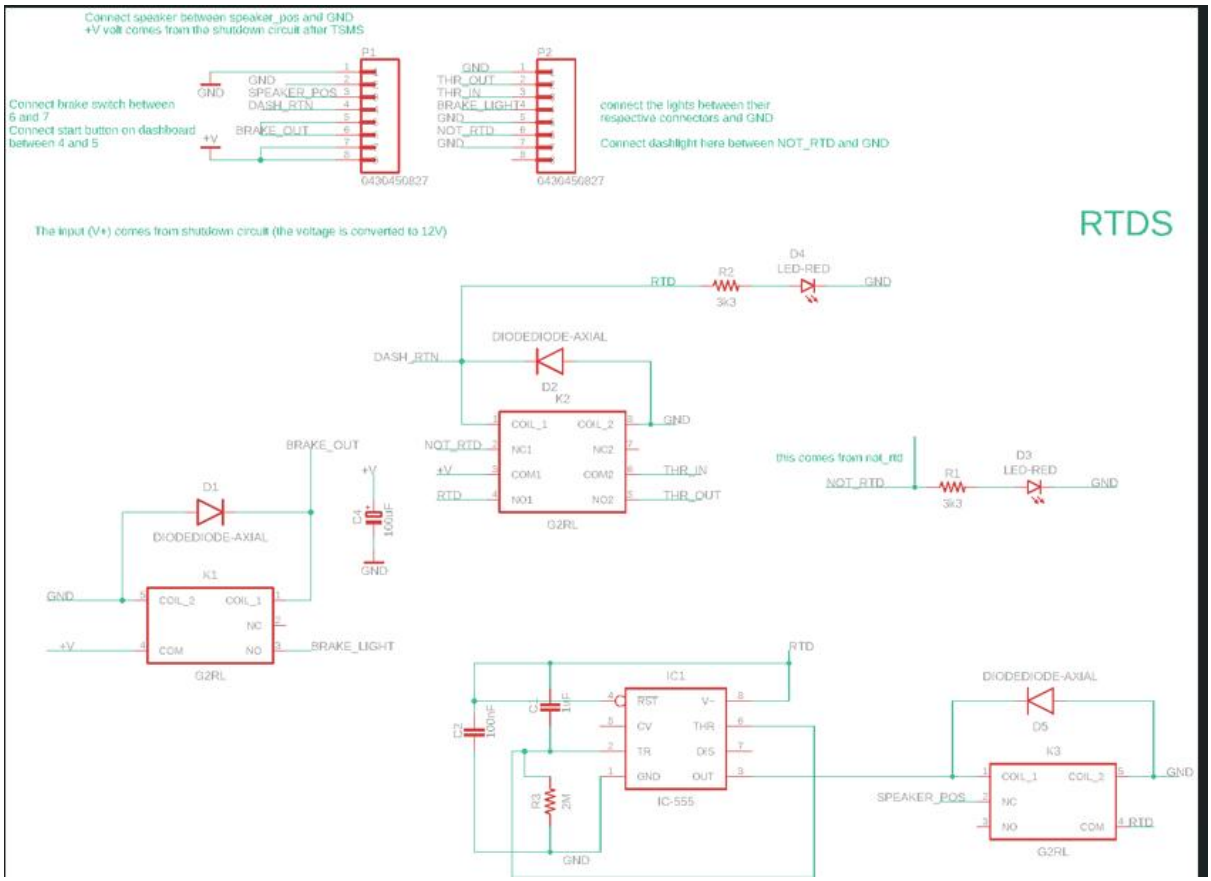
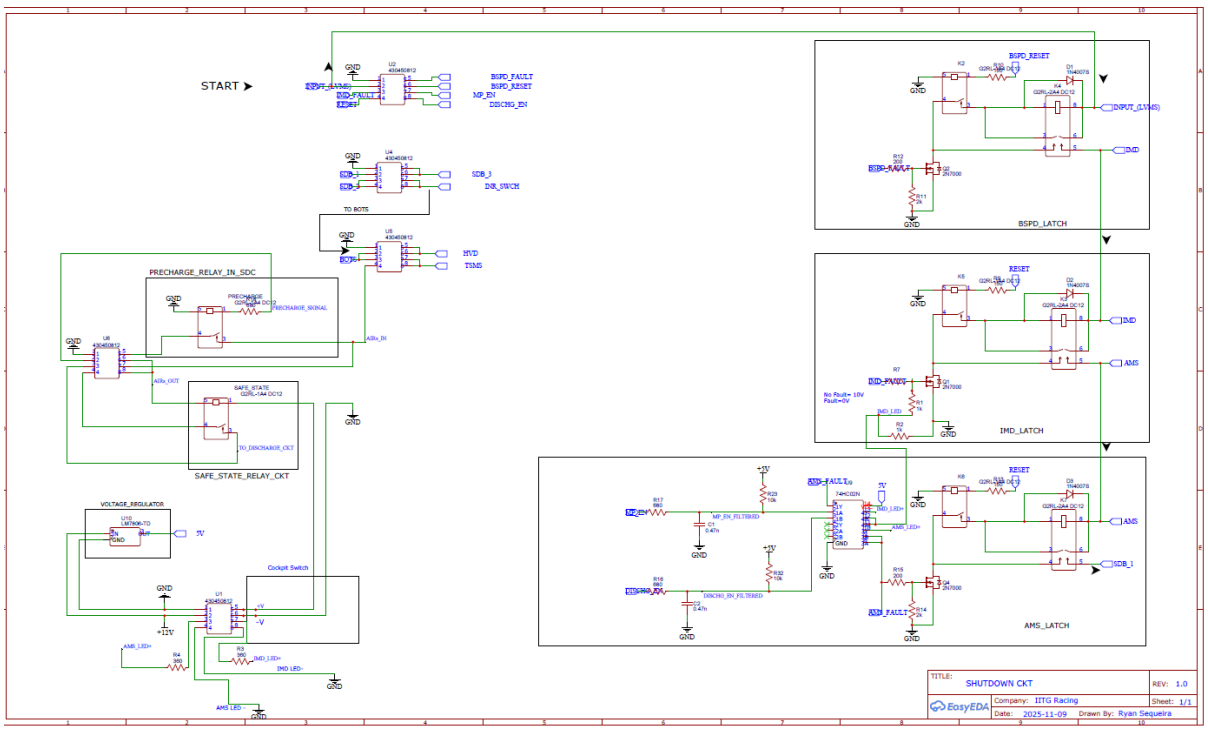
SDC Cart