View from Front side (Scale 1:1.2)

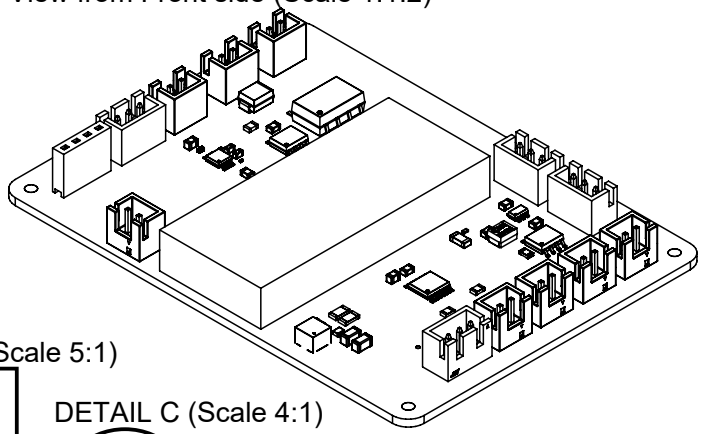

DETAIL A (Scale 6:1)

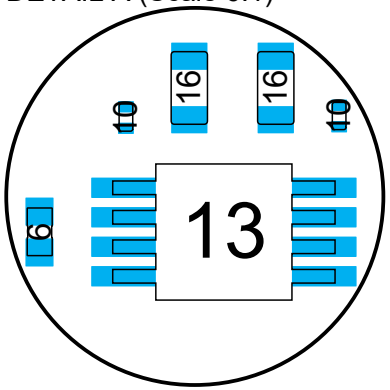

DETAIL B (Scale 5:1)

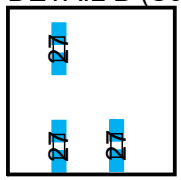

DETAIL C (Scale 4:1)

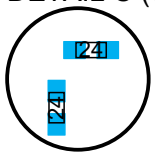

DETAIL D (Scale 4:1)

View from Top side (Scale 1.813:1)

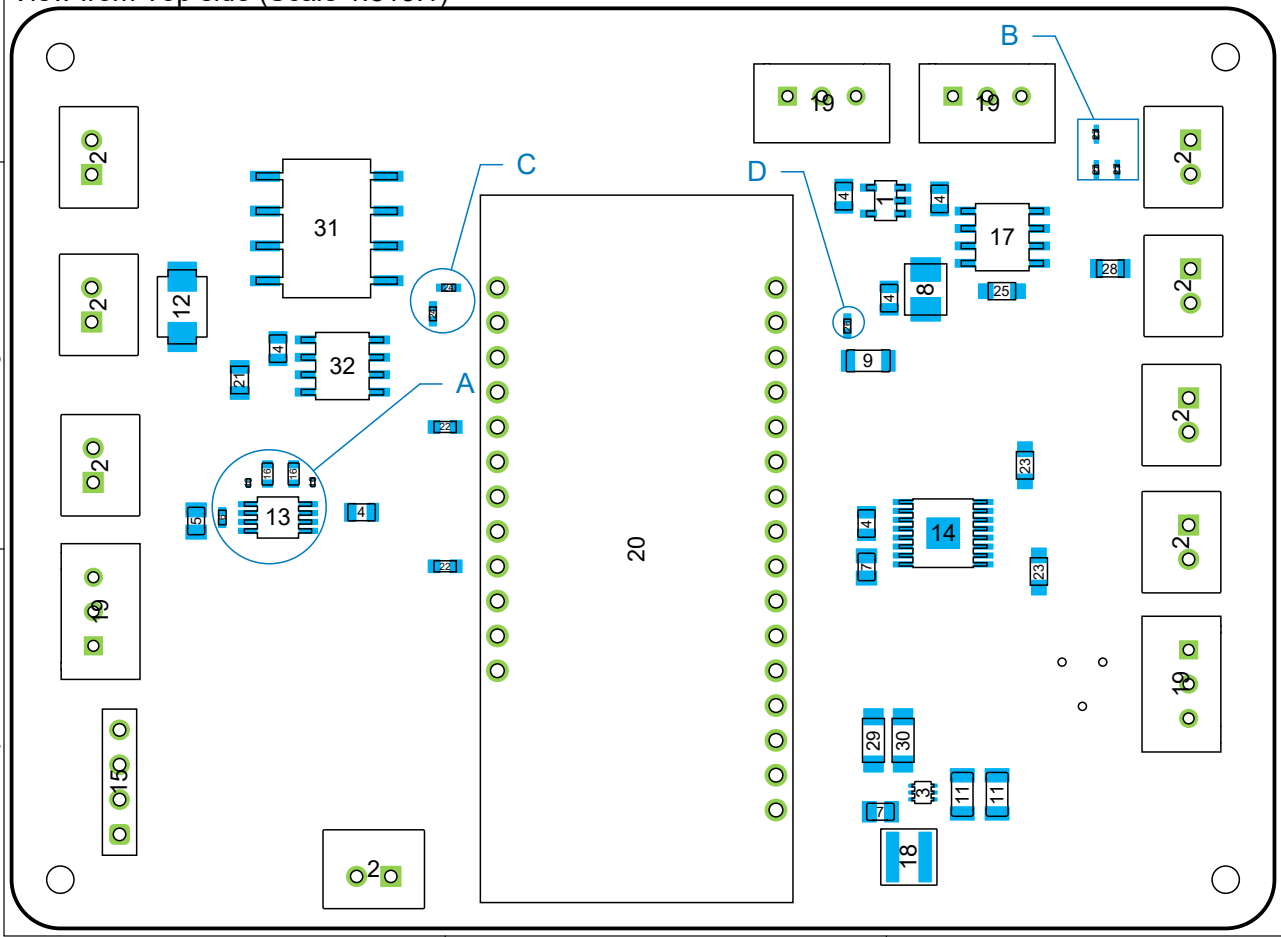
A
B
C
D
31
32
12
13
20
17
14
8
9
18
19
19
19
19
19
15
2
2
2
2
2
2
2
2
2
2
2
2
4
4
4