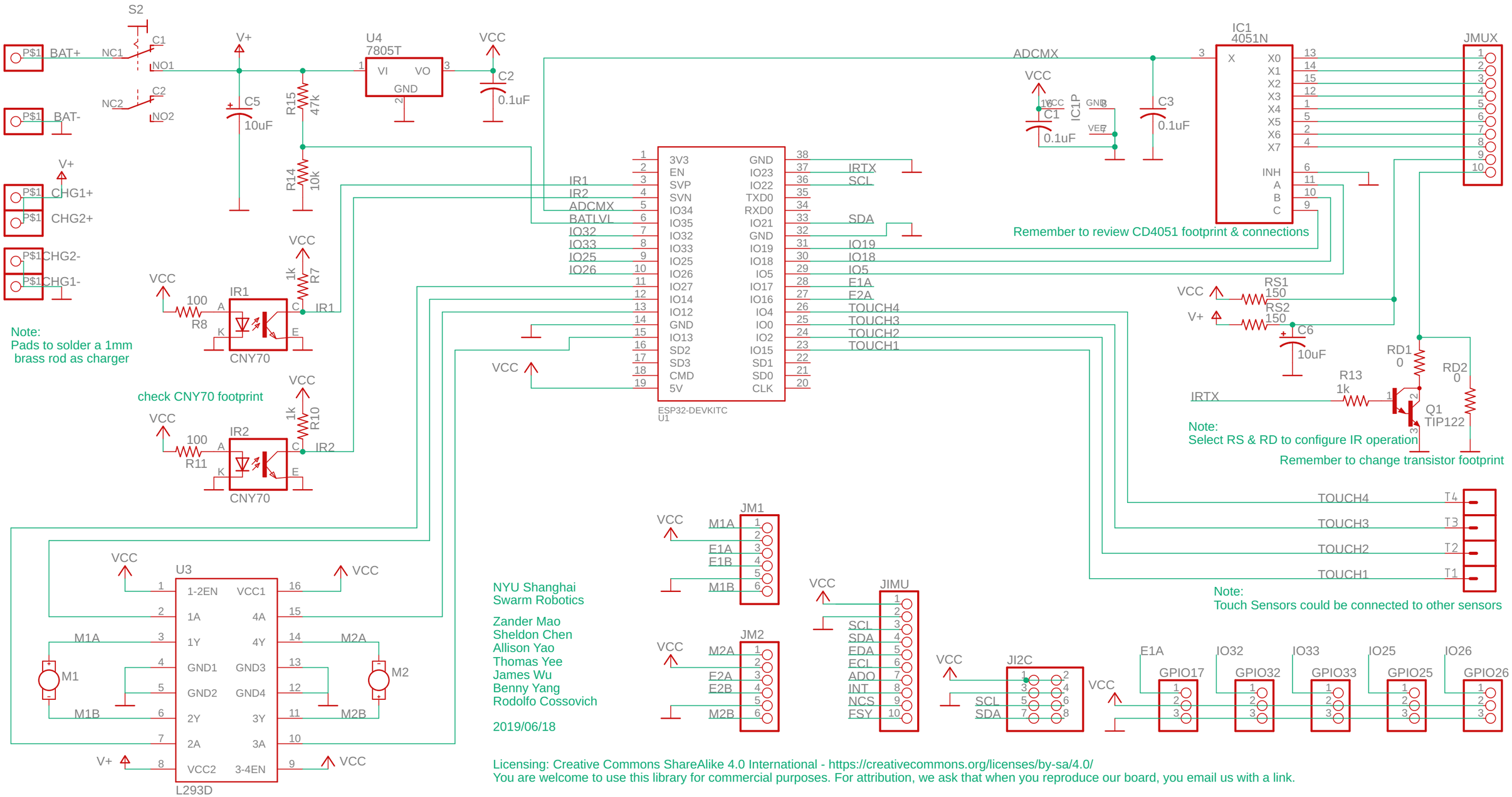

NYU Shanghai
Swarm Robotics

Zander Mao
Sheldon Chen
Allison Yao
Thomas Yee
James Wu
Benny Yang
Rodolfo Cossovich

2019/06/18

Licensing: Creative Commons ShareAlike 4.0 International - https://creativecommons.org/licenses/by-sa/4.0/
You are welcome to use this library for commercial purposes. For attribution, we ask that when you reproduce our board, you email us with a link.