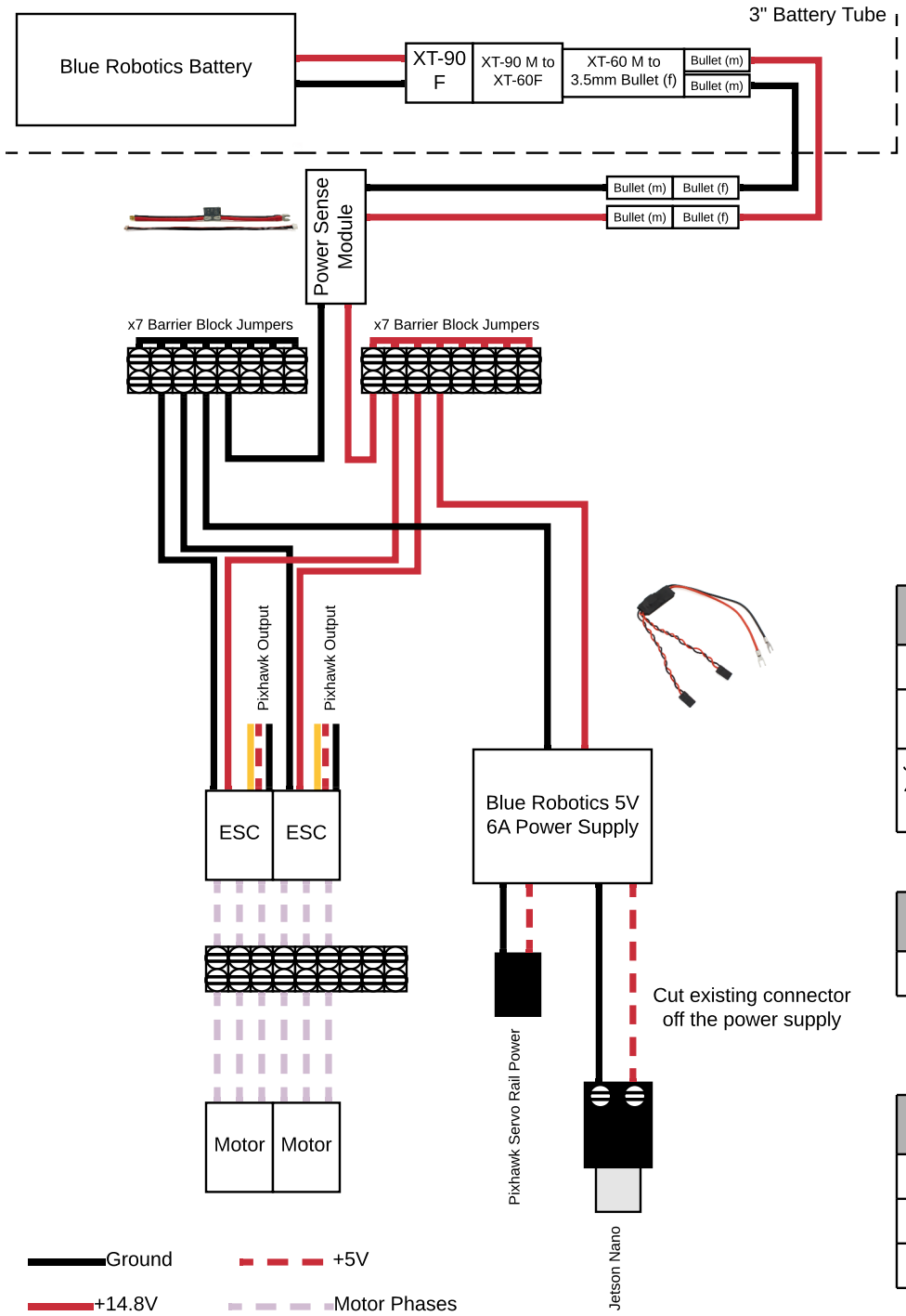

Revision	Notes
1	Initial public releas
2	Added Pixhawk telemetry and Jetson Nano connection
3	Fixed port and starboard ESC pin assignments

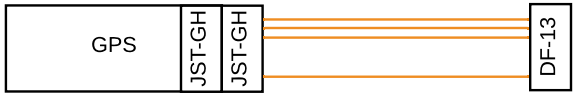

Note:
For Pixhawk 1: only 4 pins are used because I2C line are not required

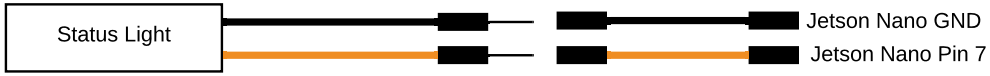

Part Name	Pixhawk Connection
GPS	10 - GPS Module
Power Sense Module	6 - Power Module
Jetson GPIO (pins 4,6,8,10 - red wire pin 4)	2 - Telem 2

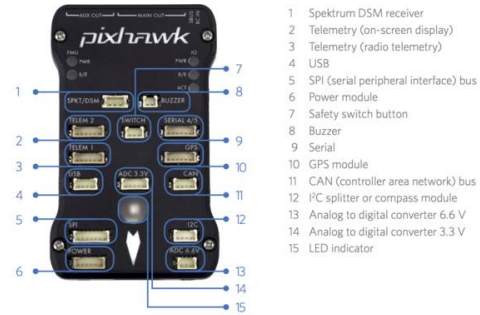

Part Name	Pixhawk Connection
USB to Jetson	Micro-USB port

1 Input/output reset button
2 SD card
3 Flight management reset button
4 Micro-USB port

Part Name	Pixhawk Connection
Port ESC	3 - Main Output 2
Starboard ESC	3 - Main Output 1
Servo Rail Power	2 - S.Bus Output

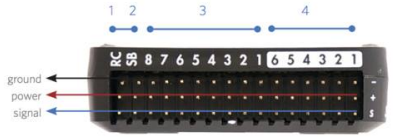

1 Radio control receiver input
2 S.Bus output
3 Main outputs
4 Auxiliary outputs

https://ardupilot.org/copter/docs/common-pixhawk-overview.html

Component & Electrical Diagrams - Electrical Connections	**Project:** Surface Vehicle			
	Drawn By: BJG	**Date:** 06/27/2020	**REV:** 3	**Page:** 1 of 1