Determination of Group Index Using Imbalanced Mach–Zehnder Interferometers

Tahereh Jafari, edX Username: taherehjafari25
Course: UBCx Phot1x

Abstract**—***This work designs and analyzes imbalanced Mach–Zehnder interferometers (MZIs) to extract the group index of a silicon strip waveguide near 1550 nm. A 500 nm × 220 nm SOI strip waveguide is first simulated in Lumerical MODE to confirm operation in the fundamental quasi-TE mode. MZI layouts are created in KLayout (SiEPIC/EBeam PDK) with differential arm lengths ΔL = 24–44 um (MZIA–MZIE), supplemented by large-ΔL validation devices (ΔL = 200–400 um). Transmission spectra are simulated in Lumerical INTERCONNECT over 1500–1600 nm, and the free spectral range (FSR) is extracted from the interference fringes. The group index is then computed using* $n_g(\lambda) = \lambda^2/(\Delta L \cdot FSR(\lambda))$ *, evaluated near* $\lambda \approx 1550$ *nm. The simulated values fall in the range* $n_g \approx$ *4.09-4.24, while the experimentally extracted values fall in the range* $n_g \approx$ *–4.06- 4.28. Overall, the measured and simulated results show reasonable agreement, with stronger agreement for the larger-ΔL devices.*

I. INTRODUCTION

In this work, we use MZIs with different path-length differences to extract the waveguide group index from the fringe spacing (FSR). A Mach–Zehnder interferometer (MZI) works by splitting light into two paths and then recombining it, so the output depends on the relative phase difference between its two arms. Because this phase difference controls how the two optical fields interfere, the MZI is a core building block in silicon photonics and is widely used to make devices like switches, splitters, and many other components. In our design, we use several MZIs with different ΔL values so we can see how the fringes shift and use the FSR to extract waveguide parameters like the group index.

II. PURPOSE AND SCOPE

The objective is to determine the group index of a 220 nm silicon-on-insulator (SOI) strip waveguide by analyzing the spectral interference fringes of imbalanced Mach–Zehnder interferometers (MZIs). A set of MZIs with different differential arm lengths was designed in KLayout, simulated using Lumerical INTERCONNECT, and analyzed to extract the free spectral range (FSR) near 1550 nm. The group index was then calculated directly from the extracted FSR and the known path-length imbalance. In addition, two calibration structures (CAL1/CAL2) are included to help compare grating-coupler responses—such as bandwidth and spectral shape—rather than to accurately determine propagation loss given their relatively small length difference.

III. BACKGROUND AND THEORY

An MZI splits the input optical field into two arms and recombines them at the output. When the two arms have a length difference ΔL , the relative phase difference varies with wavelength, producing periodic constructive and destructive interference in the transmission spectrum. The phase difference between the two arms is:

$$\Delta\phi(\lambda) = \frac{2\pi}{\lambda}\, n_g(\lambda)\, \Delta L$$

The wavelength dependence of this phase gives rise to the free spectral range (FSR). Near a center wavelength λ_0, the group index is related to the FSR by

$$\mathrm{FSR}(\lambda_0) \approx \frac{\lambda_0^2}{n_g\, \Delta L}$$

Thus, once the FSR is extracted from the spectrum and ΔL is known from the layout, n_g follows directly. For an unbalanced interferometer, the group index can be obtained from:

$$n_g = \lambda^2 / (FSR \cdot \Delta L)$$

IV. MODELING AND SIMULATION

In this course, a strip waveguide with width 500 nm and height 220 nm was used. Simulations were performed around 1550 nm, focusing only on the fundamental quasi-TE mode. The corresponding waveguide mode profile is shown below.

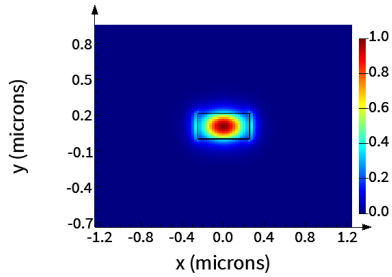

Figure 1. Fundamental quasi-TE waveguide mode profile (electric-field intensity) obtained using Lumerical MODE.

Imbalanced MZIs were then simulated in Lumerical INTERCONNECT using identical couplers and routing style, while only ΔL was varied. Transmission spectra were generated over 1500–1600 nm and used to extract the FSR near 1550 nm.

TABLE 1
INTERFEROMETER NAMING AND PATH-LENGTH DIFFERENCE

Device	ΔL (um)
MZIA	24
MZIB	29
MZIC	34
MZID	39
MZIE	44

All devices share the same couplers and general routing style; only ΔL is varied. Figure 2 shows the Lumerical INTERCONNECT schematic for the imbalanced Mach–Zehnder interferometer MZIA.

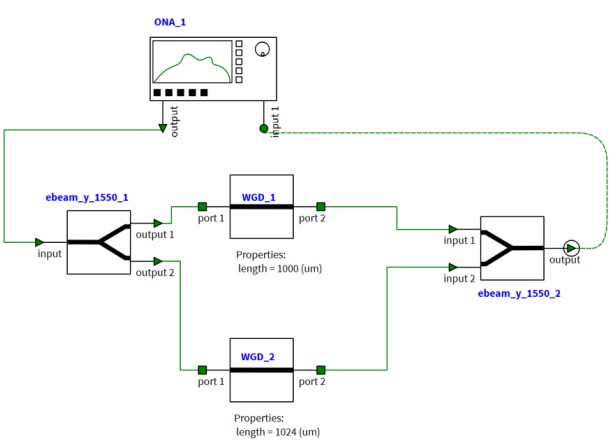

Figure 2. Lumerical INTERCONNECT schematic of the Imbalanced Mach–Zehnder interferometer (MZIA) with $\Delta L = 24\ um$ for transmission analysis.

To further validate the extraction method, four MZIs with much larger path-length differences were analyzed:

TABLE 2
LARGE-ΔL VALIDATION DEVICES

Device	ΔL (um)
MZIA	24
MZIAA	200
MZIAB	300
MZIAC	400

V. LAYOUT

The layouts were created in KLayout using SiEPIC (v0.5.31) and the EBeam PDK (v0.4.53). As shown in the layout overview, the chip includes two main groups of interferometers:

1. A baseline set of MZIs (MZIA–MZIE) with small, stepped path-length differences ΔL = 24, 29, 34, 39, and 44 um (Table I).
2. A second set of large-ΔL validation devices (MZIAA, MZIAB, MZIAC) with ΔL = 200, 300, and 400 um, along with MZIA (24 um) as the reference (Table II).

In addition to the MZI arrays, the layout also includes calibration structures (e.g., CAL1/CAL2) placed alongside the interferometers, as seen in the overall floorplan.

Figure 3. Proposed layout on the allocated space of 410 um x 605 um (MZI set + CAL structures)

The same coupler and routing topology were maintained across devices so that the effect of path-

length imbalance could be isolated in the spectral response.

VI. RESULTS AND DISCUSSION

Figure 4 shows simulated transmission spectra (TE) versus wavelength for the five Mach–Zehnder interferometers MZIA through MZIE. Each trace shows the interference fringes over the 1500–1600 nm band; the fringe spacing (FSR) decreases as the arm-length imbalance ΔL increases. These spectra are used to extract the FSR and subsequently compute the waveguide group index.

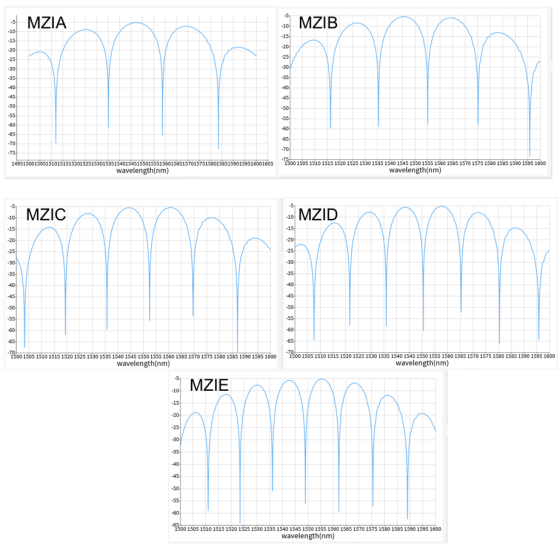

Figure 4. Simulated TE transmission spectra vs. wavelength for MZIA–MZIE (1500–1600 nm).

TABLE 3

EXTRACTED FSR AND GROUP INDEX FOR MZIA TO MZIE

Device	ΔL(um)	FSR (nm)	Extracted n_g
MZIA	24	24.463	4.092
MZIB	29	19.773	4.190
MZIC	34	16.892	4.183
MZID	39	14.516	4.244
MZIE	44	13.157	4.150

The devices with larger $\boldsymbol{\Delta L}$ exhibit very dense fringes, allowing averaging over many fringe periods. Figure 5 shows simulated TE transmission spectra for the MZI set used in group-index extraction: baseline MZIA (ΔL = 24 μm) and extended-delay devices MZIAA/AB/AC (ΔL = 200/300/400 μm). The decreasing fringe spacing with increasing ΔL is used to measure FSR and compute n_g. Table 4 summarizes the extracted FSR and group index from Lumerical simulation.

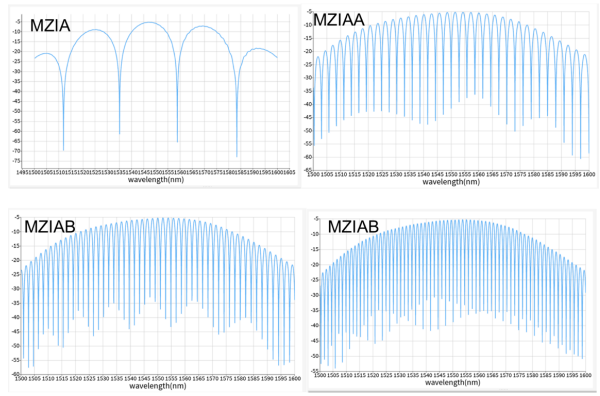

Figure 5. Simulated TE transmission spectra for MZIA and MZIAA/AB/AC.

TABLE 4

EXTRACTED FSR AND GROUP INDEX FOR MZIA TO MZIAC

Device	ΔL(um)	FSR (nm)	Extracted n_g
MZIA	24	24.463	4.092
MZIAA	200	2.848	4.218
MZIAB	300	1.908	4.198
MZIAC	400	1.427	4.208

As expected, the FSR decreases monotonically as ΔL increases, consistent with the intended path-length imbalance. The extracted simulated group index lies in the range $n_g \approx$ 4.09- 4.24 near 1550 nm. Minor deviations are likely due to finite spectral resolution and local dispersion.

VII. DATA ANALYSIS

To validate the fabricated devices against the design model, the measured transmission spectra (channel 1 from the chip data) were compared directly with the corresponding Lumerical INTERCONNECT simulations for MZIA–MZIE and MZIAA–MZIAC (Figure 6). For each device, the measured trace was aligned to the simulated response using a small

wavelength shift, linear amplitude scaling, and a vertical offset. This procedure accounts for practical differences in insertion loss, baseline level, and wavelength calibration between measurement and simulation.

In Figure 6, the measured transmission spectra are plotted in blue, while the simulated transmission spectra are plotted in orange, allowing direct visual comparison of fringe spacing, spectral shape, and wavelength alignment for each device.

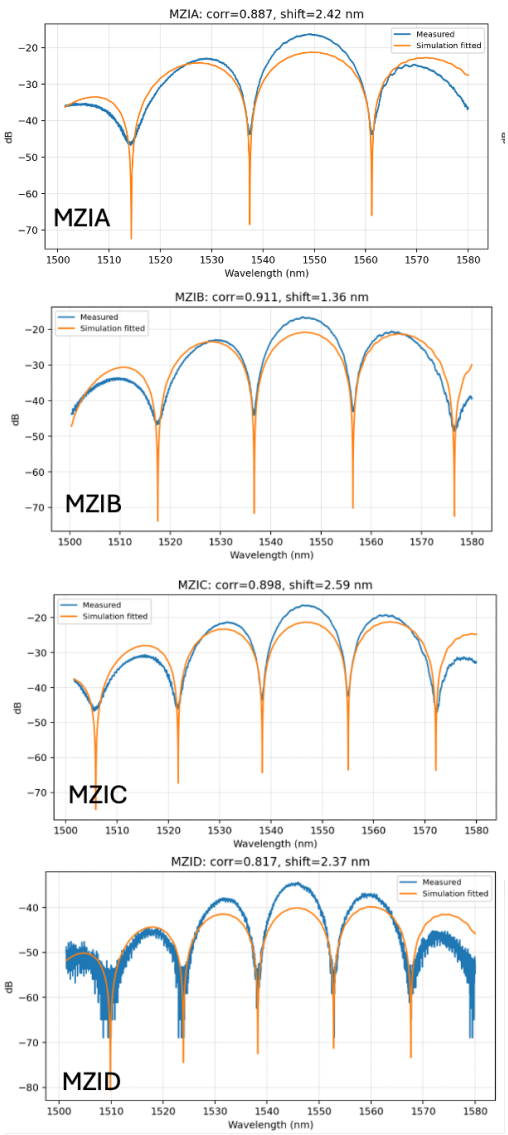

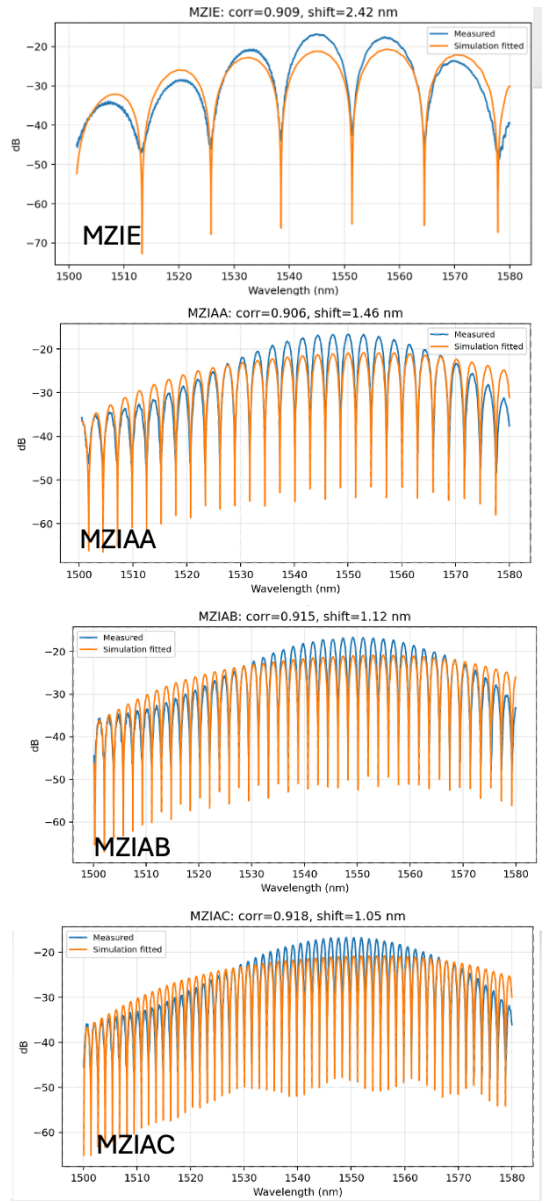

Figure 6. Overlay of aligned measured and simulated transmission spectra for all MZI devices. The overall agreement is strong for most devices, with MZID appearing as the principal outlier.

After alignment, most devices showed strong agreement, with correlation coefficients between approximately 0.89 and 0.92. The fitted wavelength correction was typically 1.1–2.6 nm, indicating only a modest spectral offset. The measured extinction ratios were generally lower than the simulated values, which is consistent with additional loss, splitter imbalance, fabrication variation, and other non-ideal effects in the fabricated structures. Nevertheless, the measured spectra preserved the main simulated fringe shape and

FSR trend, supporting the validity of the extracted group-index values.

MZID was the principal outlier, with a lower correlation of about 0.82 and a more distorted measured trace. This suggests a stronger influence of fabrication variation or measurement noise for that device. Even so, its measured FSR remained reasonably close to the simulated trend.

Table 5 summarizes the extracted experimental and simulated FSR and group-index values near 1550 nm. As expected, the FSR decreases monotonically as ΔL increases. The extracted group index ranges from approximately 4.06 to 4.28 for experiment and from 4.09 to 4.24 for simulation. The mean values, 4.199 from experiment and 4.185 from simulation, indicate reasonable overall agreement between fabricated devices and the design model.

TABLE 5

EXPERIMENTAL AND SIMULATED FSR / GROUP INDEX NEAR 1550 NM

Device	ΔL (um)	Experimental FSR (nm)/ ng	Simulated FSR (nm)/ ng
MZIA	24	23.588/ 4.244	24.463/ 4.092
MZIB	29	20.403/ 4.061	19.773/ 4.19
MZIC	34	16.704/ 4.230	16.892/ 4.183
MZID	39	14.399/ 4.278	14.516/ 4.244
MZIE	44	13.136/ 4.157	13.157/ 4.150
MZIAA	200	2.852/4.212	2.848/ 4.218
MZIAB	300	1.909/ 4.195	1.908/ 4.198
MZIAC	400	1.426/ 4.212	1.427/ 4.208

The results in Table 5 confirm that the measured and simulated FSR values follow the same overall trend with increasing path-length imbalance. While some device-to-device variation is present, especially for MZID, the extracted group index remains in good overall agreement between experiment and simulation. The strongest agreement is observed for the larger-ΔL devices, which provide denser fringes and therefore more reliable FSR extraction.

VIII. CONCLUSION

A set of imbalanced Mach–Zehnder interferometers (MZIs) was designed, simulated, fabricated, and analyzed to extract the group index of a 220-nm SOI strip waveguide near 1550 nm. The measured and simulated FSR values scale inversely with the designed path-length difference, and both datasets yield group-index values in reasonable agreement. The best agreement is observed for the larger-ΔL devices, while one smaller-ΔL device (MZID) shows a more distorted measured response. Overall, the results confirm that the extracted group index of the waveguide is approximately 4.1–4.2 near 1550 nm.

The inclusion of calibration waveguides provides additional context on grating-coupler response and general device behavior, although they were not used as the primary basis for group-index extraction.

REFERENCES

[1] L. Chrostowski and M. Hochberg, **Silicon Photonics Design: From Devices to Systems**. Cambridge University Press, 2015.

[2] UBCx Phot1x course/lab notes, **Silicon Photonics: Design, Fabrication and Data Analysis**.

ACKNOWLEDGEMENTS

I/We acknowledge the edX UBCx Phot1x Silicon Photonics Design, Fabrication and Data Analysis course, which is supported by the Natural Sciences and Engineering Research Council of Canada (NSERC) Silicon Electronic-Photonic Integrated Circuits (SiEPIC) Program. The devices were fabricated by Richard Bojko at the University of Washington Washington Nanofabrication Facility, part of the National Science Foundation's National Nanotechnology Infrastructure Network (NNIN), and Cameron Horvath at Applied Nanotools, Inc. Mateo Branion-Calles performed the measurements at The University of British Columbia. We acknowledge Lumerical Solutions, Inc., Mathworks, Mentor Graphics, Python, and KLayout for the design software.