Design, Fabrication, and Experimental Analysis of Mach-Zehnder Interferometer

Sutasinee Jiravanitchapan (sutasinee@narit.or.th)

National Astronomical Research Institute of Thailand (Public Organization), Chiang Mai, Thailand

1. INTRODUCTION

The Mach-Zehnder Interferometer (MZI) is an optical device that splits an incoming light wave into two separate paths, introduces a controlled phase difference between them, and then recombines the beams to produce interference at the output. The MZI are widely used in photonic systems due to their ability to precisely control optical phase and interference. Due to its simplicity, flexibility, and compatibility with photonic integration, the MZI has become a fundamental building block in modern optical systems.

This work focuses on the design and characterization of the MZI. First, we perform a preliminary design and conduct optical simulations to evaluate device behavior. Next, we develop the circuit and physical layout for fabrication. Finally, we compare the simulated performance with measurement data obtained from the fabricated device.

2. THEORY

The MZI consists of the key following components.

1. Input splitter (Y-branch): Split the incoming optical power into two paths.
2. Waveguides: Light travels with possibly different phase accumulations.
3. Output combiner (Y-branch): Recombines the light and producing the interference.

If the input electric field is E_i, and the splitter divides it equally, then electric field of each branch is $\frac{E_i}{\sqrt{2}}$

a. The propagation of light

For plane wave, the complex electric field is $E = E_0 e^{i(\omega t - \beta z)}$, where E_0 is a complex amplitude, ω is an optical frequency, and β is a propagation constant.

As light propagation through each branch, the propagation constant of light is $\beta = \frac{2\pi n}{\lambda}$, where n is the index of refraction and λ is the wavelength.

b. The first half of MZI: Y-branch splitter and 2 waveguides

We define difference of the propagation constant of light of 2 waveguides. They also have different length, and the path length difference is $\Delta L = L1 - L2$.

At the end of 2 waveguides, if there is no optical loss, the electric fields are

$$E_{o1} = \frac{E_i}{\sqrt{2}} e^{-i\beta_1 L_1}, E_{o2} = \frac{E_i}{\sqrt{2}} e^{-i\beta_2 L_2}$$

c. The second half of MZI: 2 waveguides and Y-branch combiner

Light is combined in the Y-branch combiner, and the output electric field is

$$E_o = \frac{1}{\sqrt{2}}(E_{o1} + E_{o2}) = \frac{E_i}{\sqrt{2}}(e^{-i\beta_1 L_1} + e^{-i\beta_2 L_2})$$

Convert the electric field into intensity

$$I_o = \frac{I_i}{4}\left|e^{-i\beta_1 L_1} + e^{-i\beta_2 L_2}\right|^2 = \frac{I_i}{2}[1 + \cos(\beta_1 L_1 - \beta_2 L_2)]$$

For balance interferometer that lengths are same, the output intensity is

$$I_o = \frac{I_i}{2}[1 + \cos(\Delta\beta L)]$$

For imbalance interferometer with identical waveguides, the output intensity is

$$I_o = \frac{I_i}{2}[1 + \cos(\beta\Delta L)]$$

If we plot the transmission of the imbalance interferometer and wavelength, we can find the free spectral range from the spacing between peaks.

$$FSR = \frac{\lambda^2}{\Delta L n_g}, \text{ where group index}(n_g) = n - \lambda\frac{dn}{d\lambda}$$

3. MODELLING AND SIMULATION

a. Waveguide geometry

A silicon strip waveguide with a cross-sectional dimension of 500 nm × 220 nm (width × height) is designed, where silicon (Si) serves as the core material and silicon dioxide (SiO_2) acts as the cladding.

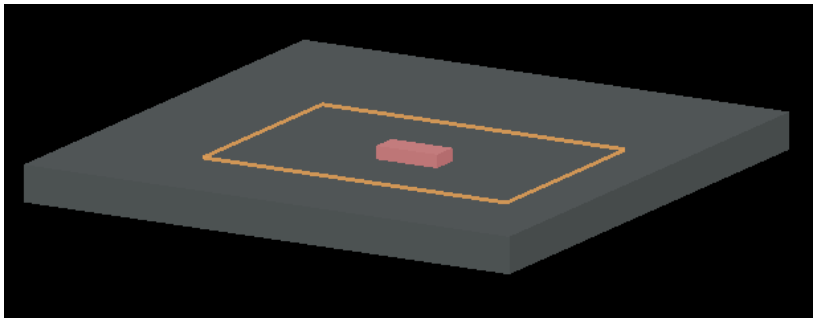

Fig. 1 Design of waveguide geometry in Lumerical

b. Simulated waveguide mode profile

The waveguide simulations are performed using the finite-difference eigenmode (FDE) solver in Lumerical. The results corresponding to a wavelength of 1550 nm are shown in the following figures.

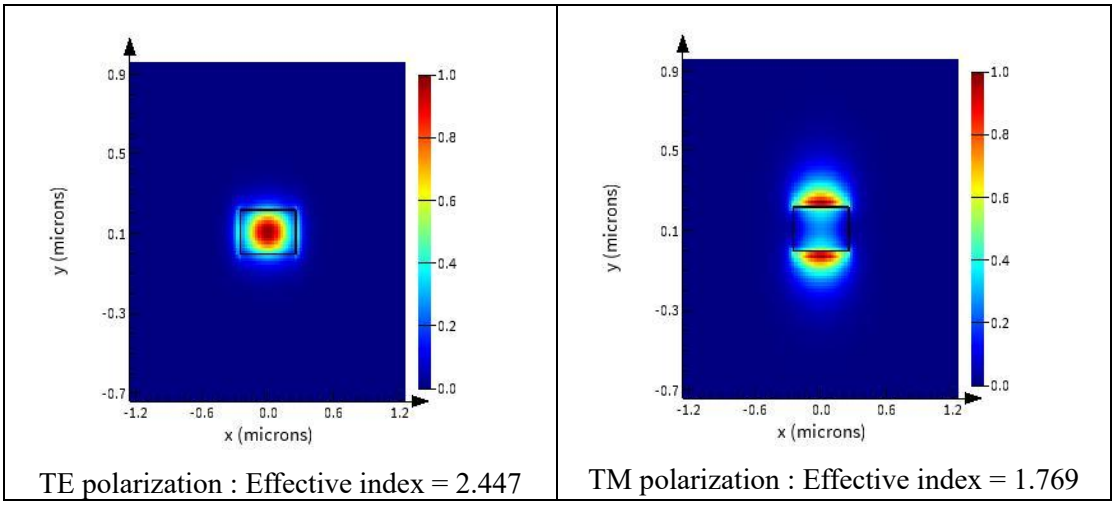

Fig. 2 Simulated waveguide mode profile (E intensity) of TE01 and TM01 mode

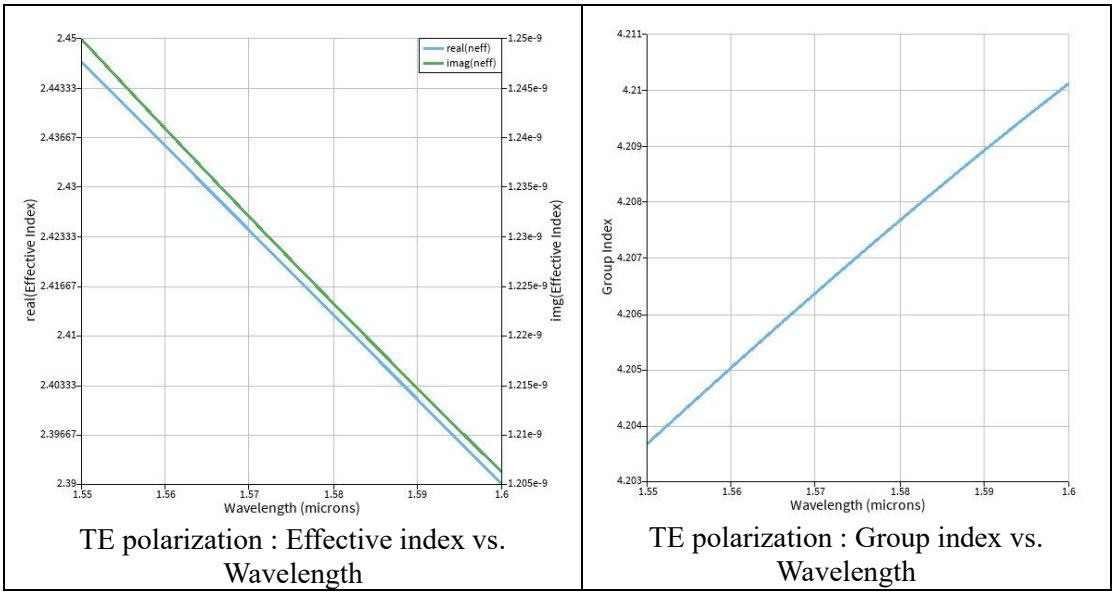

TE polarization : Effective index vs. Wavelength | TE polarization : Group index vs. Wavelength

Fig. 3 Plot of effective index and group index of waveguide, versus wavelength of TE01 mode

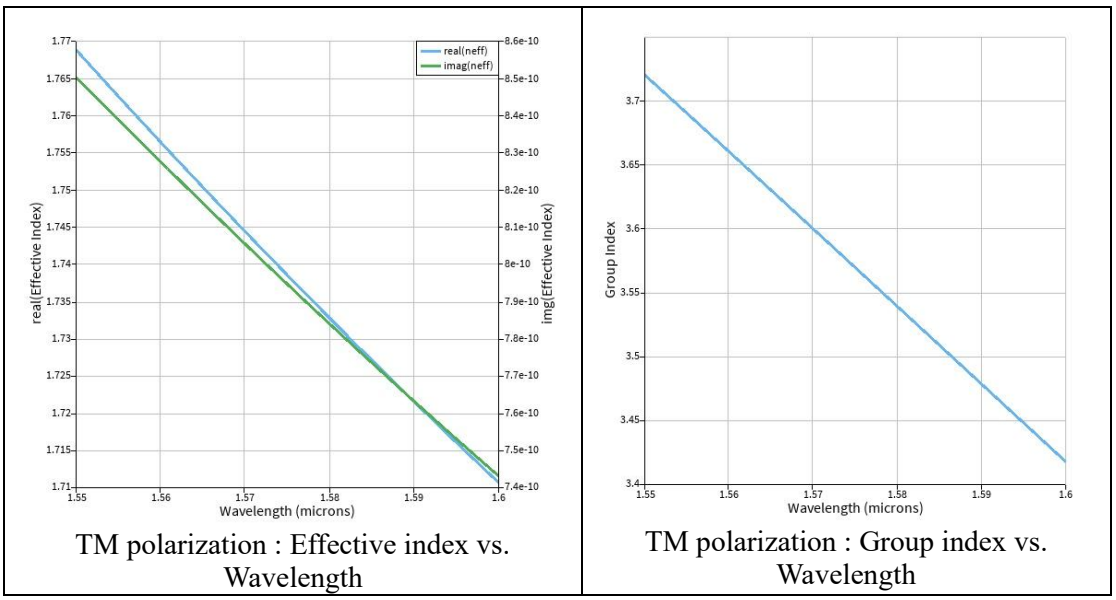

TM polarization : Effective index vs. Wavelength | TM polarization : Group index vs. Wavelength

Fig. 4 Plot of effective index and group index of waveguide, versus wavelength of TM01 mode

c. Compact model for the waveguide (polynomial expression)

The compact model for the waveguide is a second order of polynomial, obtained using a Taylor expansion around the center wavelength.

$$n_{eff}(\lambda) = n_1 + n_2(\lambda - \lambda_0) + n_3(\lambda - \lambda_0)^2$$

The data obtained from the wavelength sweep in Lumerical MODE are fitted using a script to extract the coefficients. A compact model of the waveguide is then obtained with a center wavelength of λ_0 = 1.55µm, as given below

For TE polarization,

$$n_{eff}(\lambda) = 2.44682 - 1.13352(\lambda - 1.55) - 0.041065(\lambda - 1.55)^2$$

For TM polarization,

$$n_{eff}(\lambda) = 1.76882 - 1.25896(\lambda - 1.55) + 1.92378(\lambda - 1.55)^2$$

d. Transfer function of the interferometer vs. wavelength

In this design, a Mach–Zehnder Interferometer (MZI) is utilized. The transfer functions of both the balanced and imbalanced MZI configurations are given below.

For balance MZI,

$$\frac{I_o}{I_i} = \frac{1}{2}[1 + \cos(\Delta\beta L)]$$

For imbalance MZI,

$$\frac{I_o}{I_i} = \frac{1}{2}[1 + \cos(\beta\Delta L)]$$

Where I_i is the input light intensity, I_o is the output light intensity, L is length of the waveguide, and β is the waveguide propagation constant.

e. List of parameter variation and expected performance

The path length difference (ΔL) is selected as the variable design parameter and is varied as described below.

No.	ΔL (µm)
1	50
2	100
3	150
4	200

Table 1 List of ΔL variation

According to the relationship $FSR = \frac{\lambda^2}{\Delta L n_g}$, an increasing in the path length difference (ΔL) leads to reduction in the free spectral range (FSR) for an imbalanced MZI.

f. Transmission spectrum of photonic circuit

Lumerical INTERCONNECT is used to calculate the transmission spectra of the imbalanced MZI for the TE mode, considering all path length differences (ΔL) listed in Table 1.

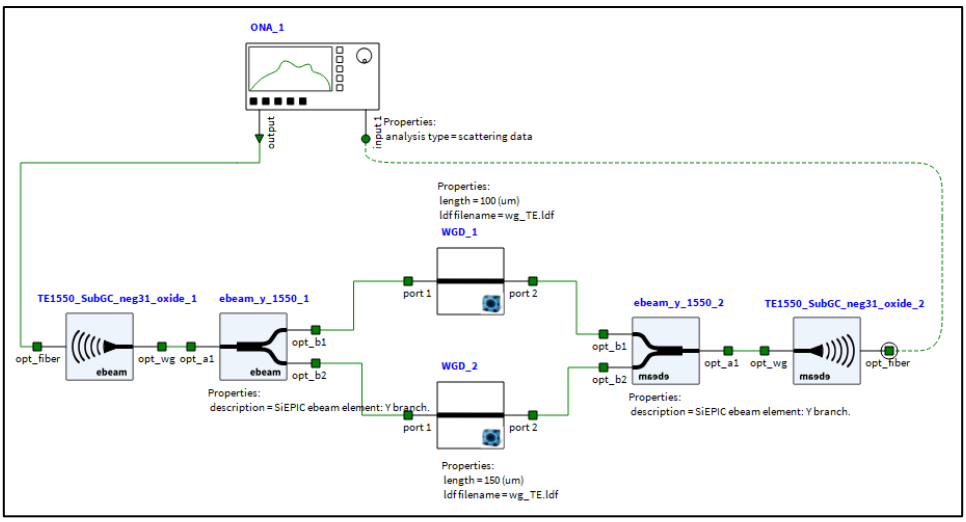

Fig. 5 Imbalance MZI circuit for TE mode in Lumerical INTERCONNECT

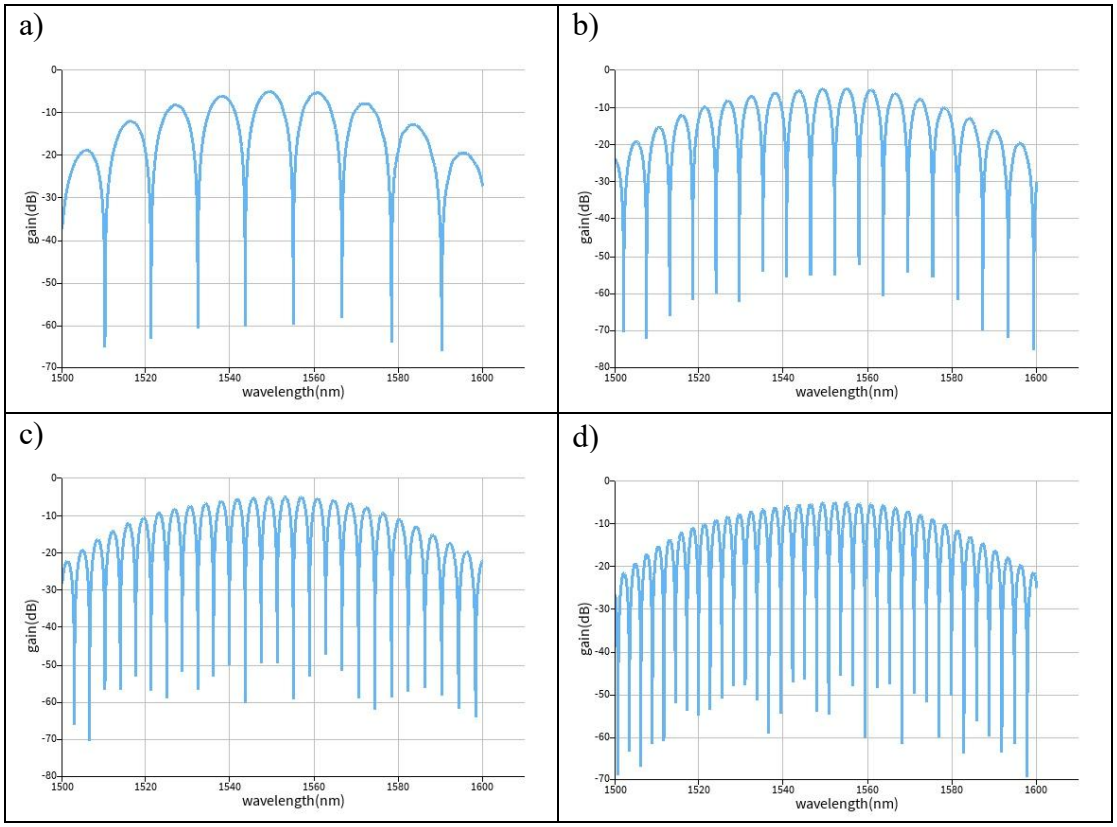

Fig. 6 Spectrum of the MZI for TE mode with path length difference a)50 µm, b)100µm, c)150µm and d)200µm

The simulation results show that the free spectral range (FSR) decreases as the path length difference (ΔL) increases, consistent with expectations.

g. Layout design

The physical layout of the Mach–Zehnder Interferometer (MZI) is designed using KLayout in conjunction with the SiEPIC-EBeam-PDK.

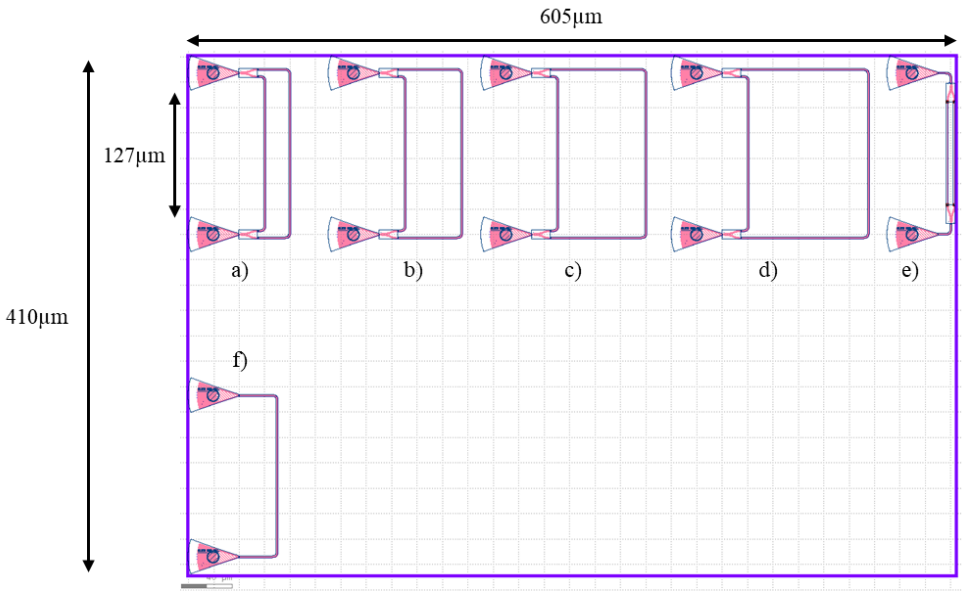

Fig. 7 Layout of the MZI with path length difference a)50 µm, b)100µm, c)150µm, d)200µm, d)0µm and f)no MZI

4. MANUFACTURING CHALLENGES

Understanding fabrication variability is essential for developing effective system implementation strategies and evaluating the associated cost implications of compensation methods.

The dominant variations in silicon photonics are silicon thickness and feature size. Corner analysis method is used to consider the impact of these variations.

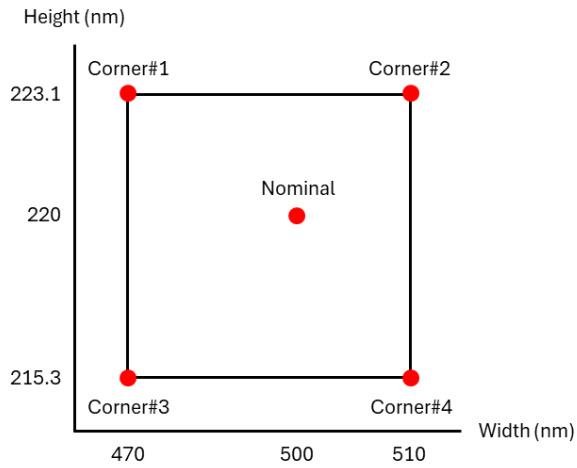

Fig. 8 Corner Analysis to consider the manufacturing variability

According to the Corner analysis method, the effective index for 500 nm × 220 nm waveguide is between 2.312 and 2.472 and the group index is between 4.180 and 4.270 in the TE polarization.

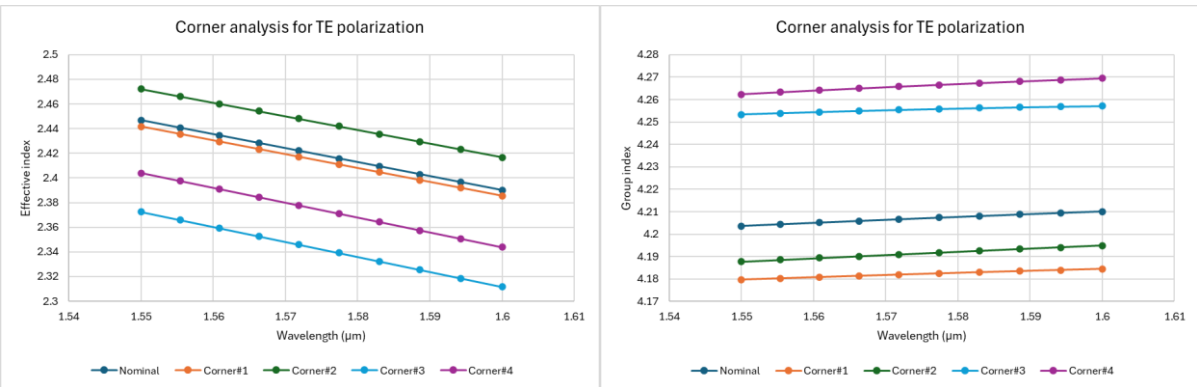

Fig. 9 Corner analysis of the effective index and group index in the TE polarization

Consider the MZI with ΔL = 50, 100, 150 and 200, using the Corner analysis to determine the range of FSR.

According to the relationship $FSR = \frac{\lambda^2}{\Delta L n_g}$, the range of FSR is shown below.

No.	ΔL (μm)	FSR (nm)
1	50	11.25-11.50
2	100	5.63-5.75
3	150	3.75-3.83
4	200	2.81-2.87

Table 2 Corner analysis of the FSR in the TE polarization

5. FABRICATION DESCRIPTION

Fabricated is performed at Applied Nanotools using the NanoSOI MPW fabrication process which is based on direct-write 100 keV electron beam lithography technology. Silicon-on-insulator wafers (220 nm device layer, 2 µm buried oxide) were cleaned, coated with HSQ resist, and patterned using a JEOL JBX-8100FS system with proximity effect correction. After development, the devices were etched using chlorine-based ICP-RIE, followed by resist removal and SEM inspection. A 2.2 µm oxide cladding was deposited via PECVD, and thicknesses were verified by reflectometry before delivery.

6. MEASUREMENT DESCRIPTION

Device characterization was performed using a custom automated test setup with Python-based control software. An Agilent 81600B tunable laser and Agilent 81635A detectors were used, with wavelength swept from 1500–1600 nm (10 pm step). Polarization-maintaining fibers enabled TE coupling, while a 90° rotation was applied for TM coupling via a fiber array.

7. MEASUREMENT DATA ANALYSIS

The measurement data were obtained from the new measurement stage at UBC, Iris. The data are fitted to the MZI transfer function to extract the group index and free spectral range (FSR).

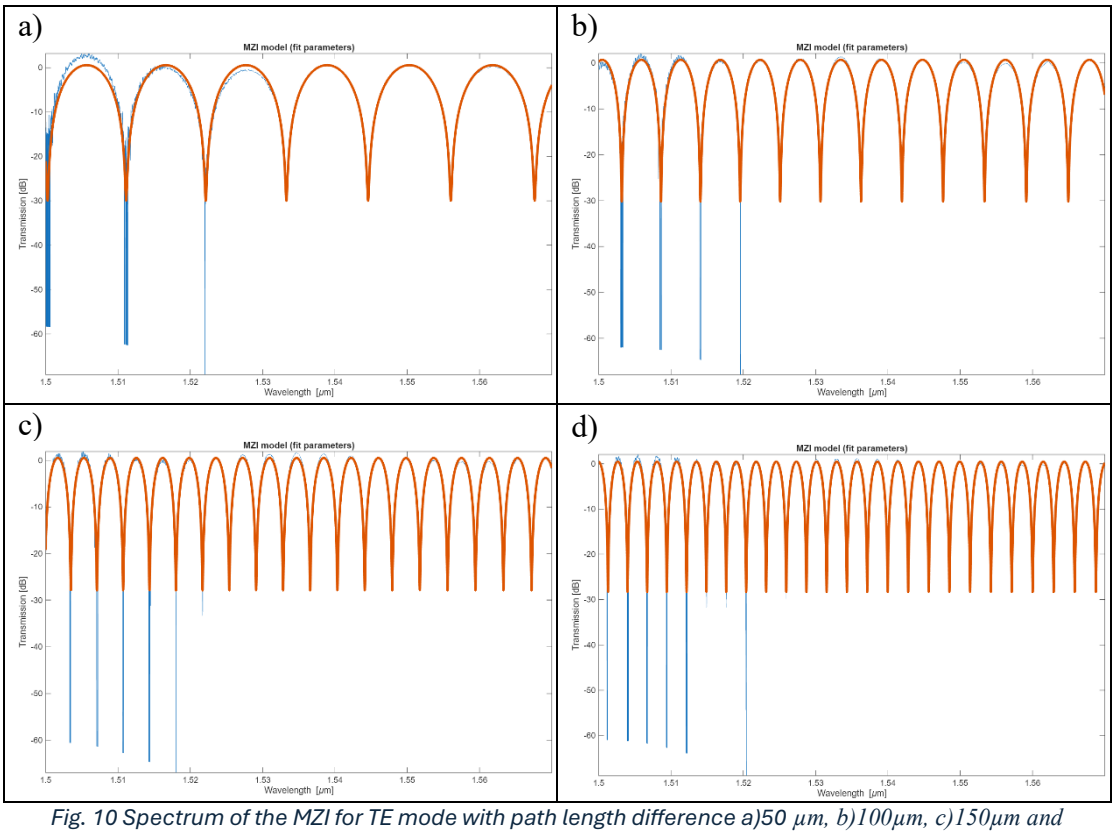

Fig. 10 Spectrum of the MZI for TE mode with path length difference a)50 µm, b)100µm, c)150µm and d)200µm, blue curve: experimental data, orange curve: fitted data

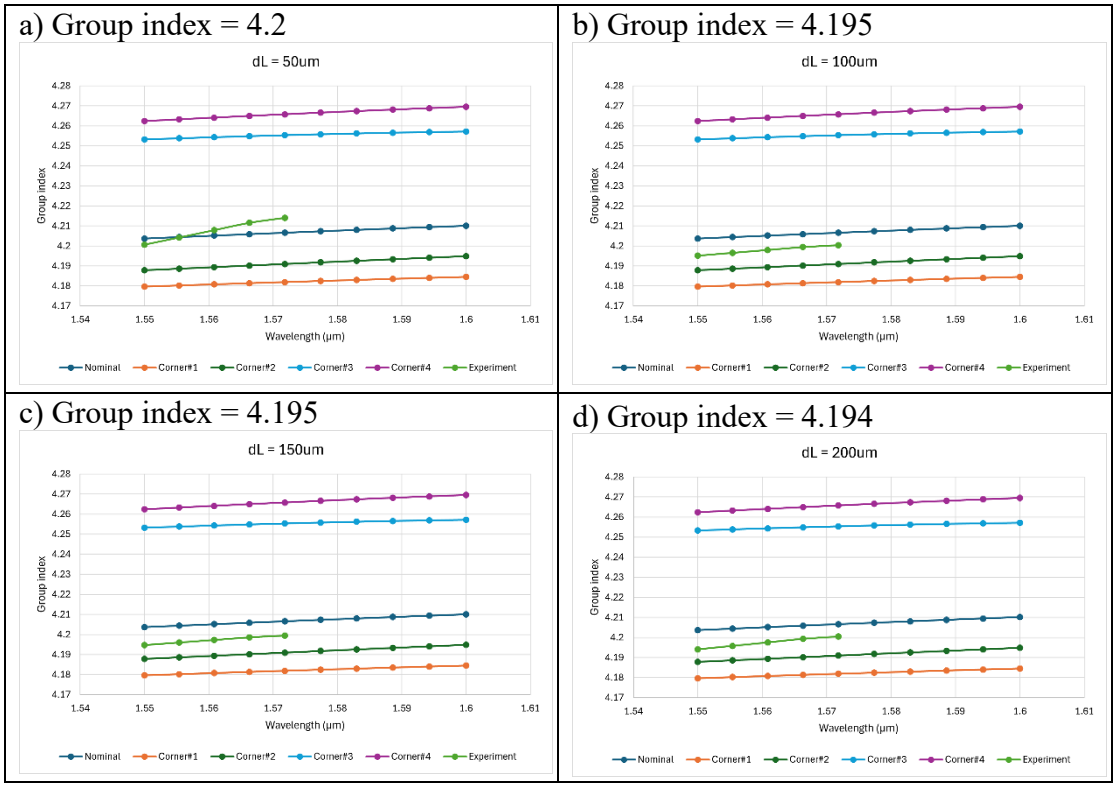

Fig. 11 The extracted group index of the MZI for TE mode with path length difference a)50 μm, b)100μm, c)150μm and d)200μm

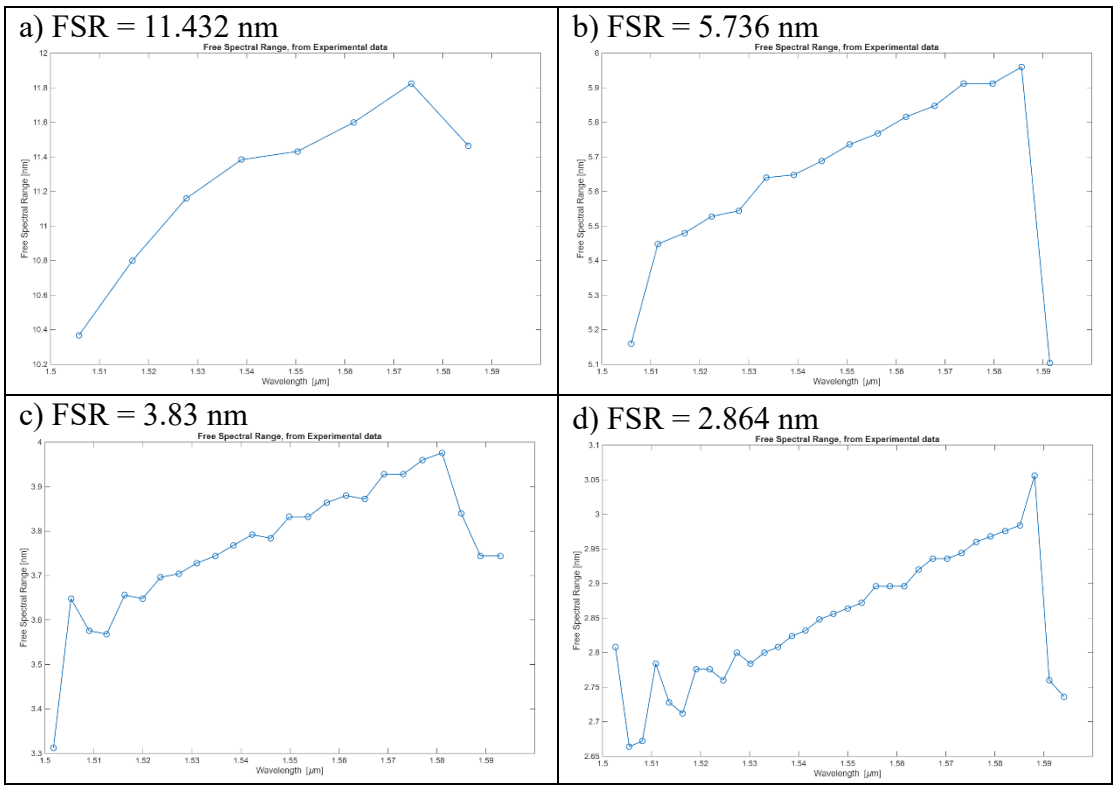

Fig. 12 The extracted FSR of the MZI for TE mode with path length difference a)50 μm, b)100μm, c)150μm and d)200μm

The extracted values of the group index and FSR from the fitted measurement data lie within the range predicted by the corner analysis.

8. ACKNOWLEDGMENTS

I acknowledge the edX UBCx Phot1x Silicon Photonics Design, Fabrication and Data Analysis course, which is supported by the Natural Sciences and Engineering Research Council of Canada (NSERC) Silicon Electronic-Photonic Integrated Circuits (SiEPIC) Program. The devices were fabricated by Applied Nanotools, Inc. Mateo Branion-Calles performed the measurements at The University of British Columbia. We acknowledge Lumerical Solutions, Inc., Mathworks, Mentor Graphics, Python, and KLayout for the design software.

9. REFERENCES

[1] R. J. Bojko, J. Li, L. He, T. Baehr-Jones, M. Hochberg, and Y. Aida, "Electron beam lithography writing strategies for low loss, high confinement silicon optical waveguides," J. Vacuum Sci. Technol. B 29, 06F309 (2011)

[2] Lukas Chrostowski, Michael Hochberg, chapter 12 in "Silicon Photonics Design: From Devices to Systems", Cambridge University Press, 2015

[3] http://siepic.ubc.ca/probestation, using Python code developed by Michael Caverley.

[4] Yun Wang, Xu Wang, Jonas Flueckiger, Han Yun, Wei Shi, Richard Bojko, Nicolas A. F. Jaeger, Lukas Chrostowski, "Focusing sub-wavelength grating couplers with low back reflections for rapid prototyping of silicon photonic circuits", Optics Express Vol. 22, Issue 17, pp. 20652-20662 (2014) doi: 10.1364/OE.22.020652

[5] www.plcconnections.com, PLC Connections, Columbus OH, USA.