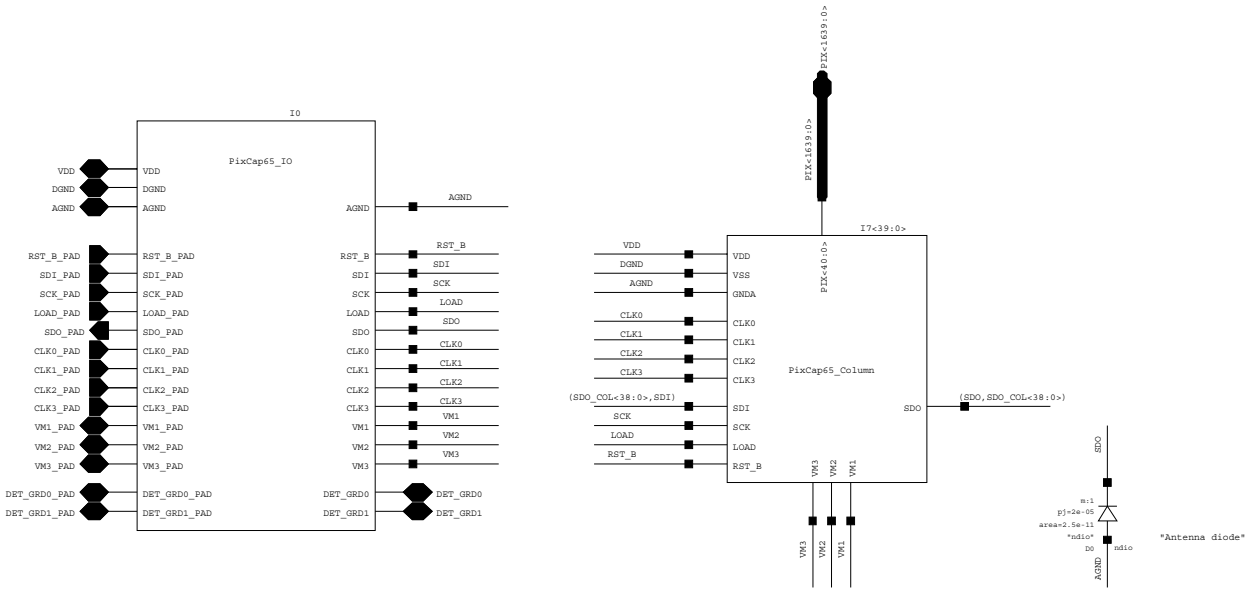

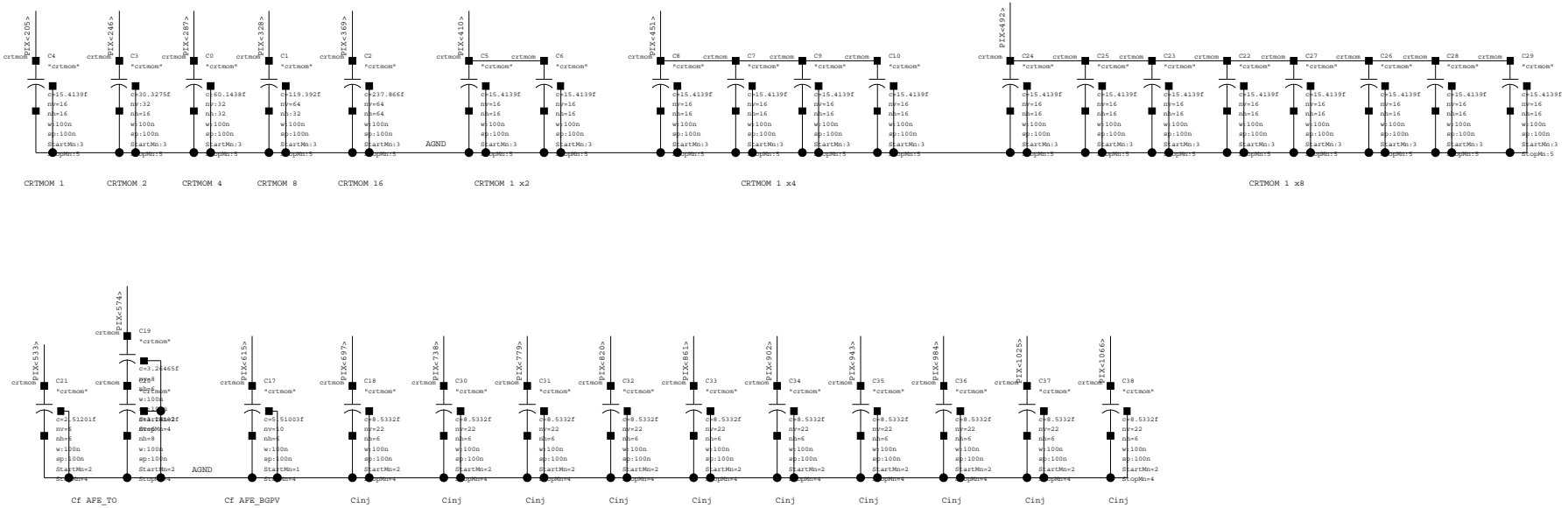

REV ?	PIXCAP65
DRAWN ?	Library PIXCAP_65
Date ?XCAP	Schematic PixCap65_Top

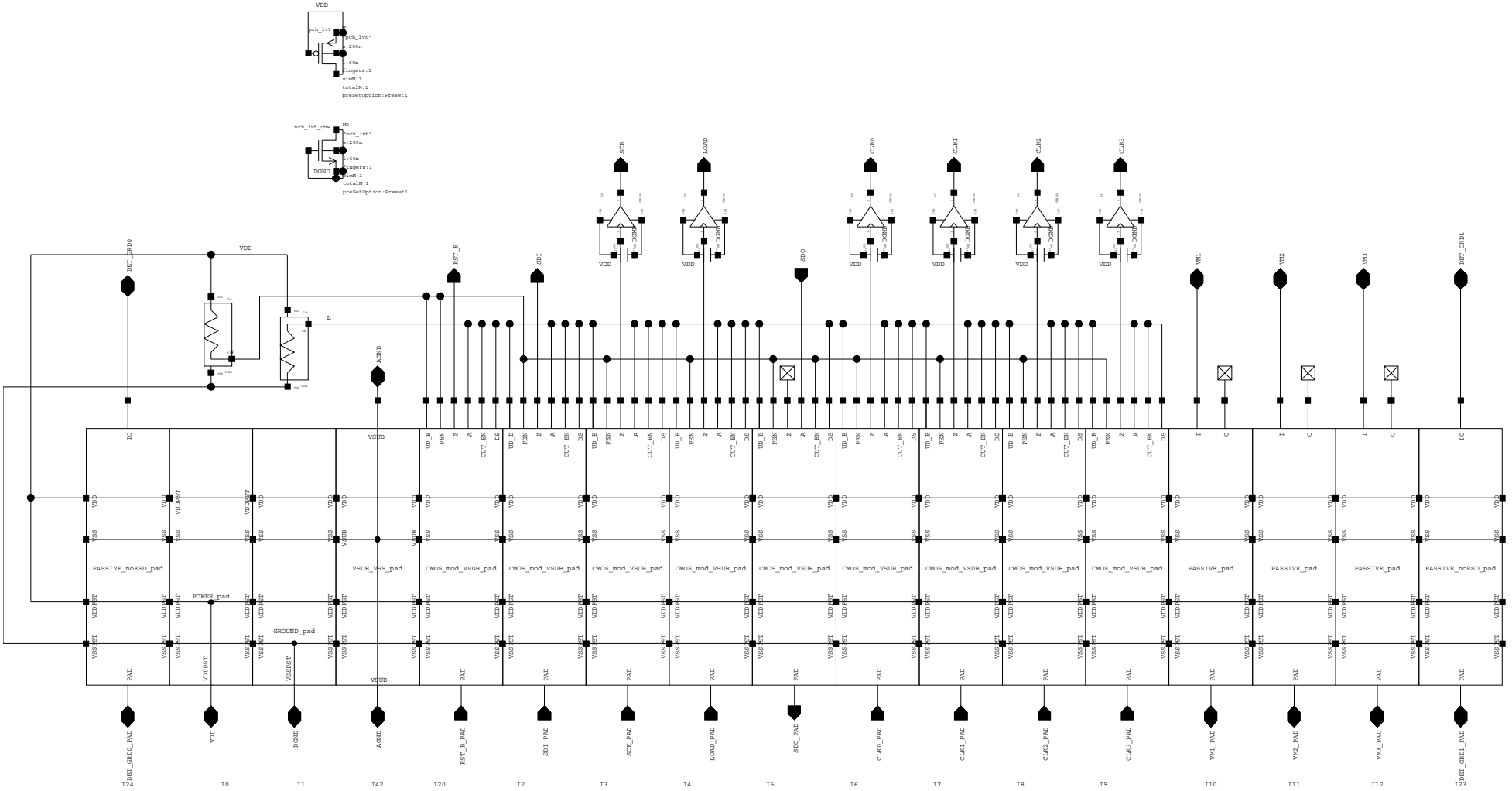

REV ?	PIXCAP65
DRAWN ?	Library PIXCAP_65
Date ?	Schematic PixCap65_IO

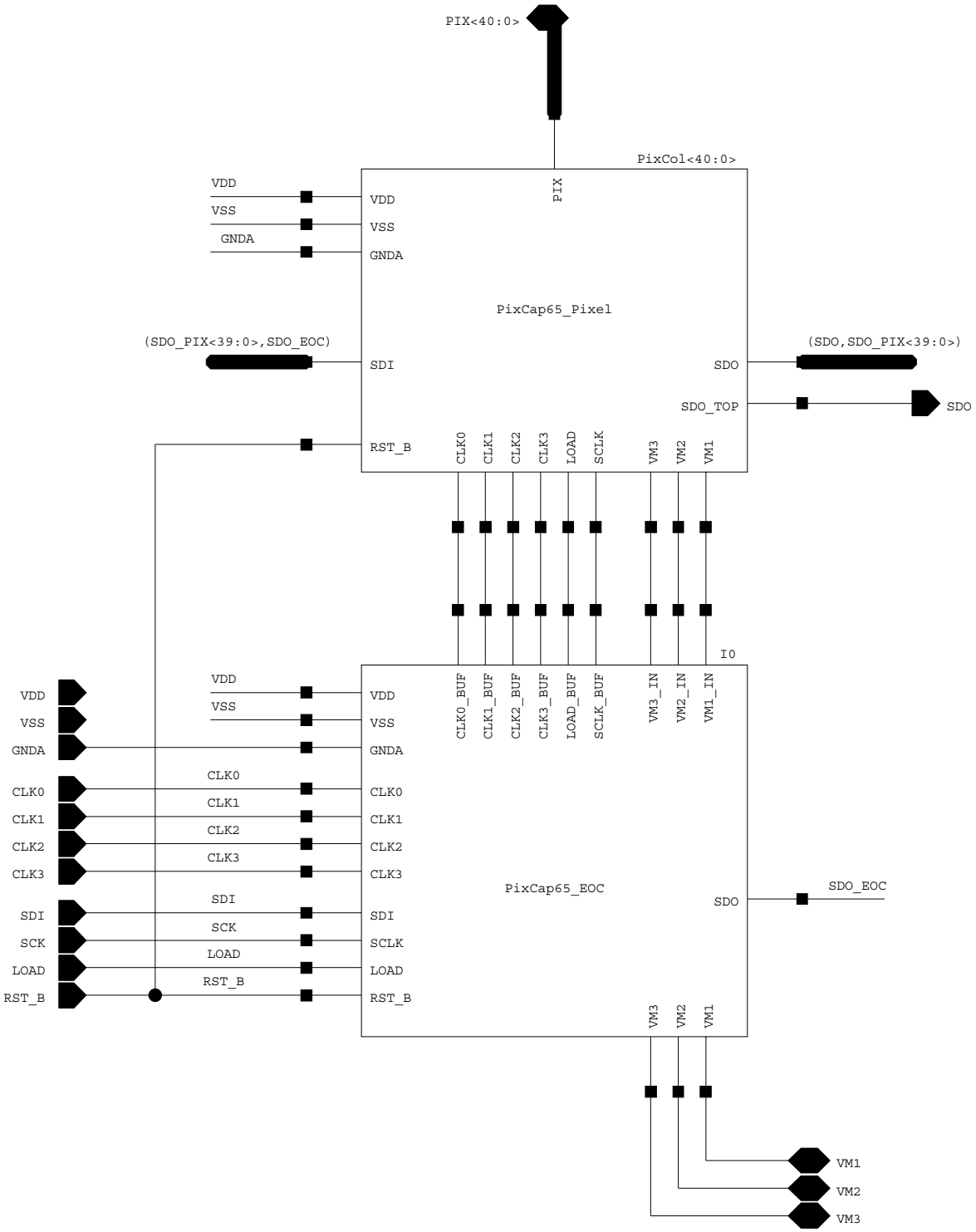

REV ?	PIXCAP65
DRAWN ?	Library PIXCAP_65
Date ?	Schematic PixCap65_Column

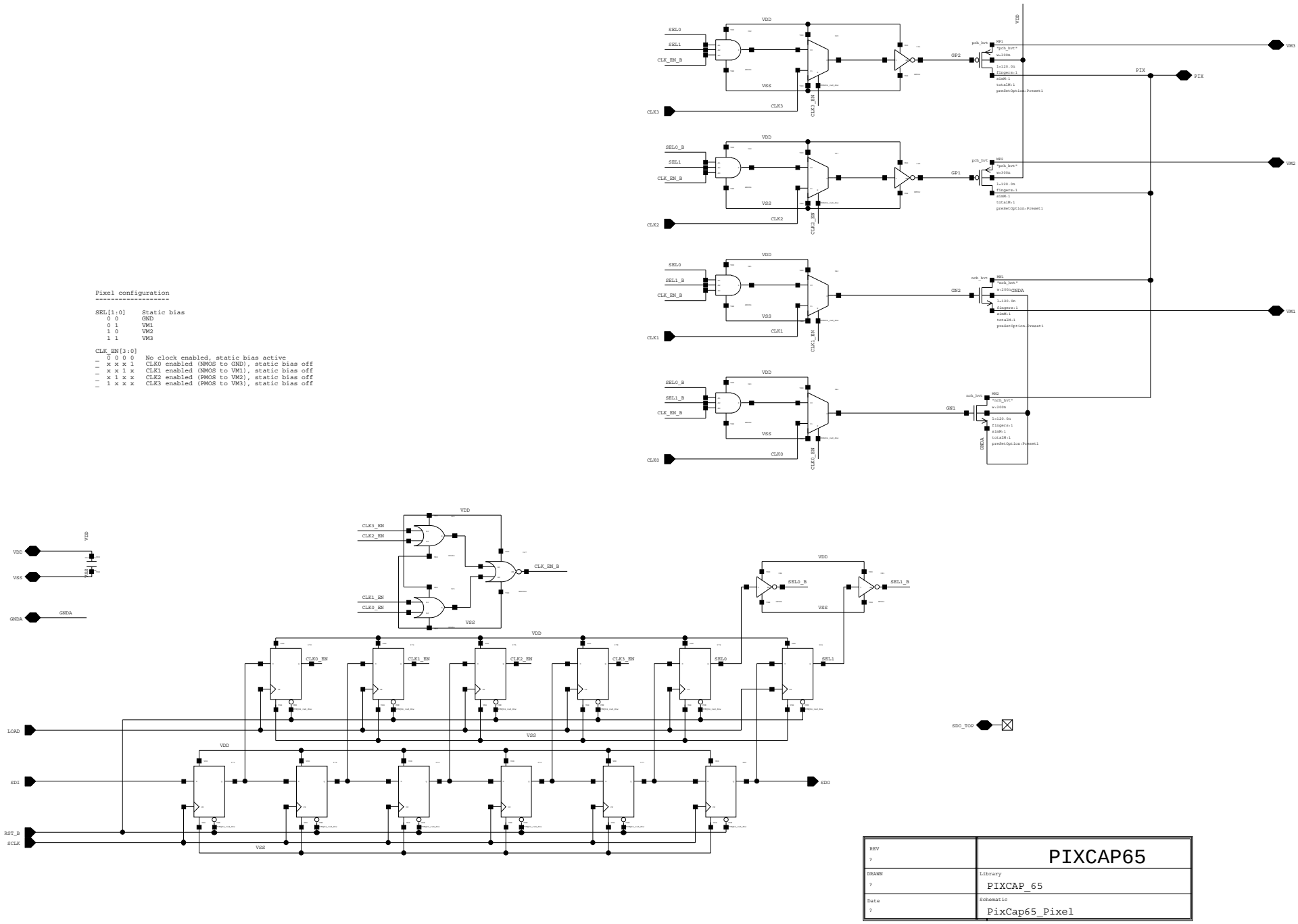

REV ?	PIXCAP65
DRAWN ?	Library PIXCAP_65
Date ?	Schematic PixCap65_Pixel

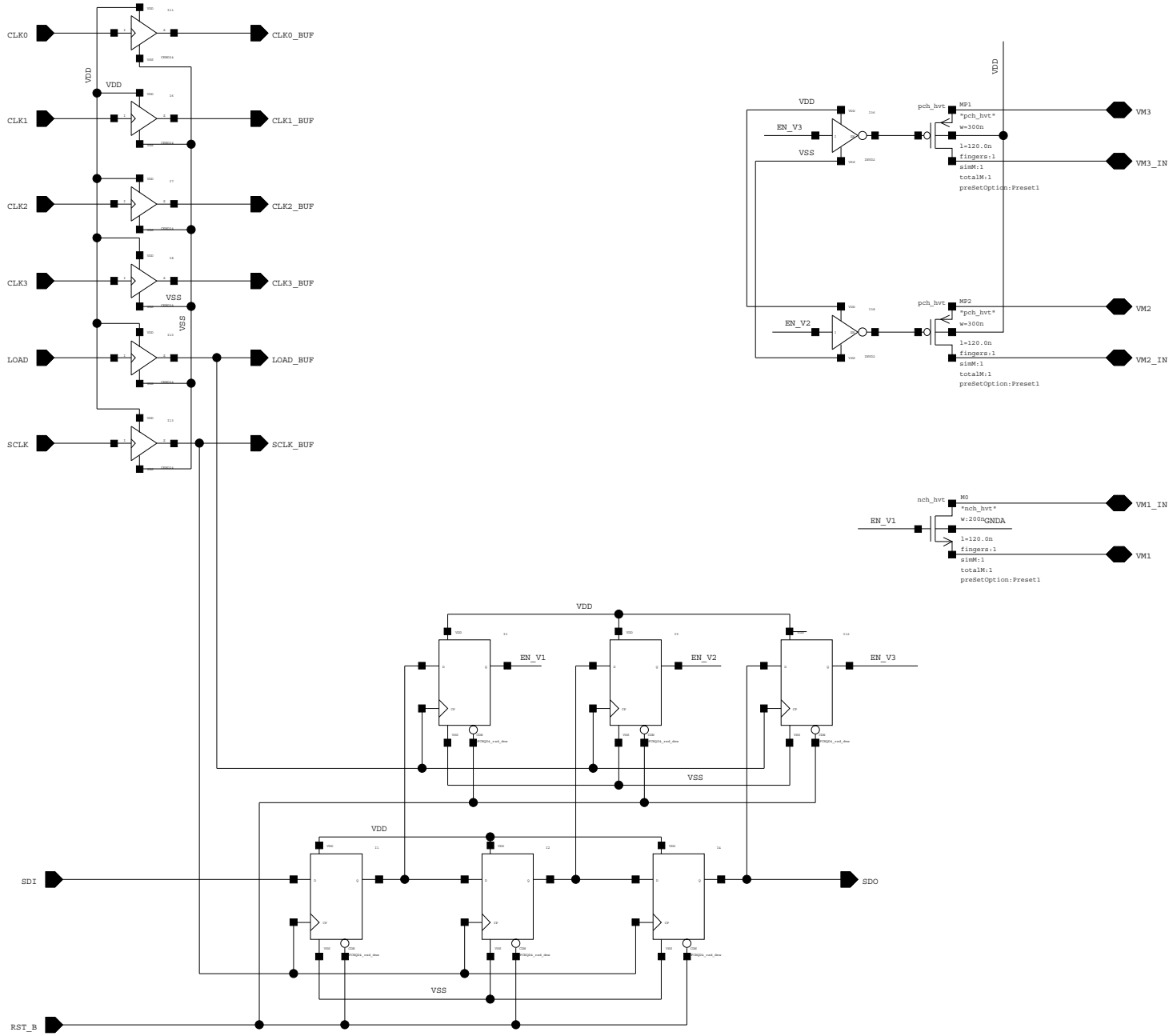

REV ?	PIXCAP65
DRAWN ?	Library PIXCAP_65
Date ?	Schematic PixCap65_EOC

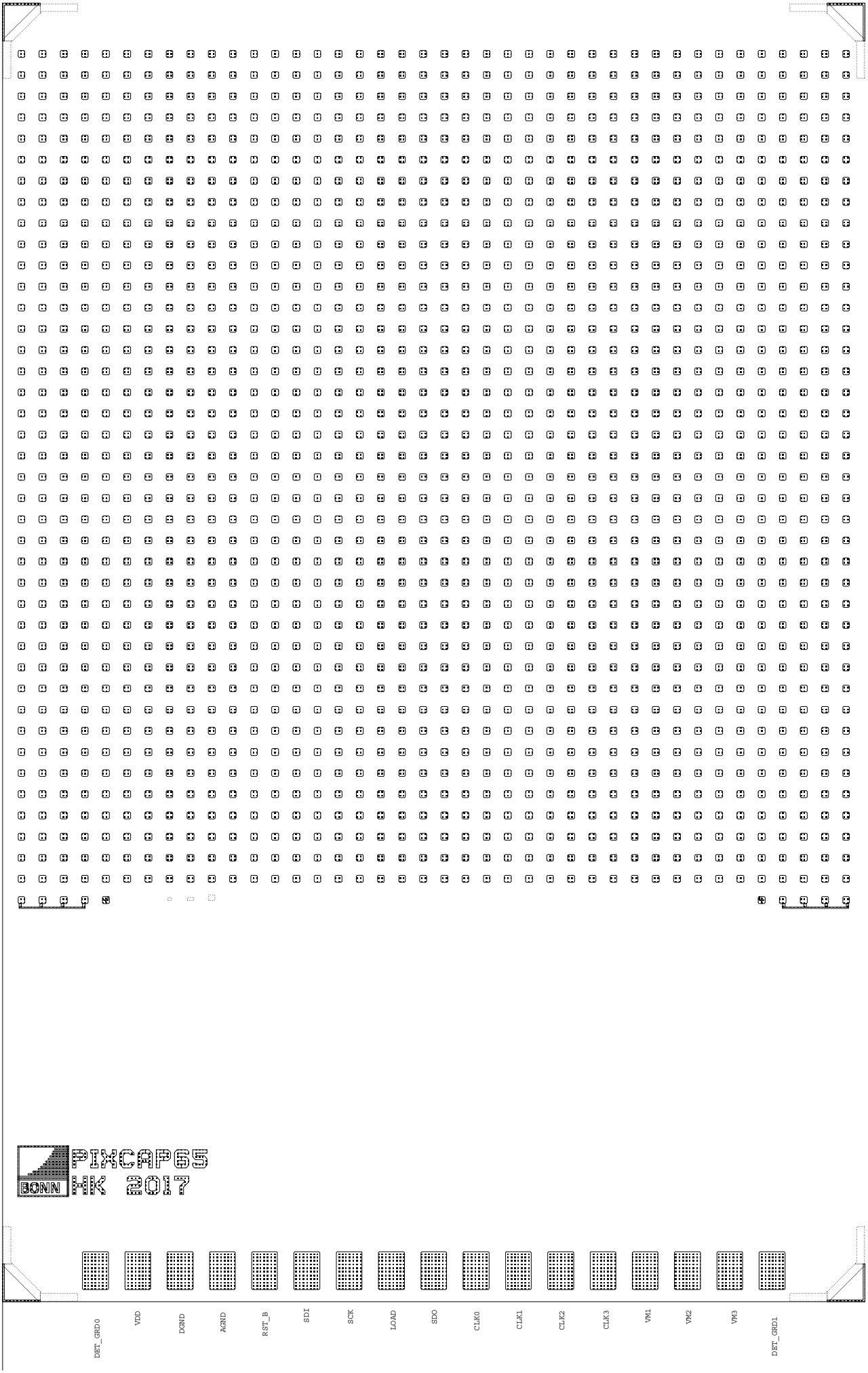
PIXCAP65
HK 2017
BONN
DET_GRD0
VDD
DGND
AGND
RST_B
SDI
SCK
LOAD
SDO
CLK0
CLK1
CLK2
CLK3
VM1
VM2
VM3
DET_GRD1