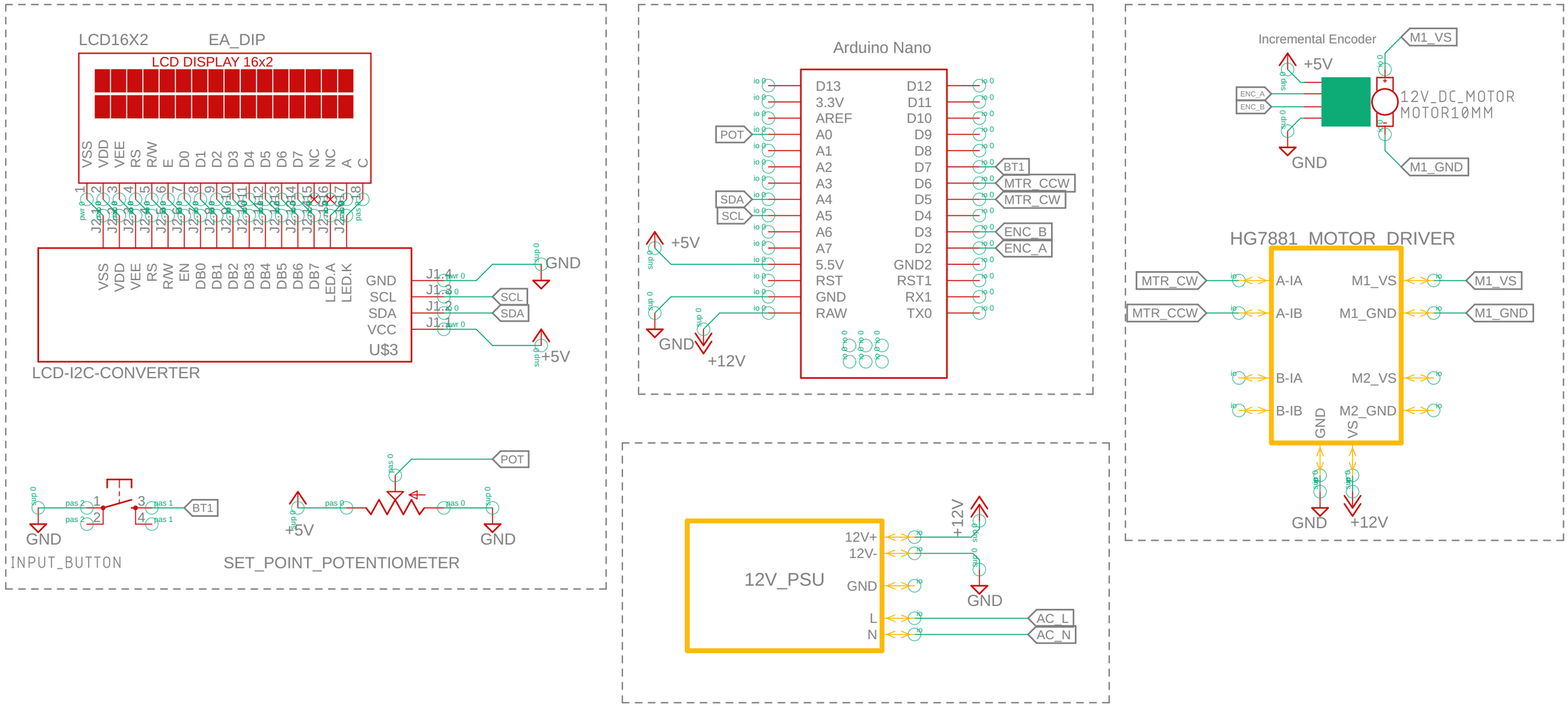

TITLE: pid motor DC	
Document Number:	REV: 0
Date: 4/23/2021 4:24 PM	Sheet: 1/1