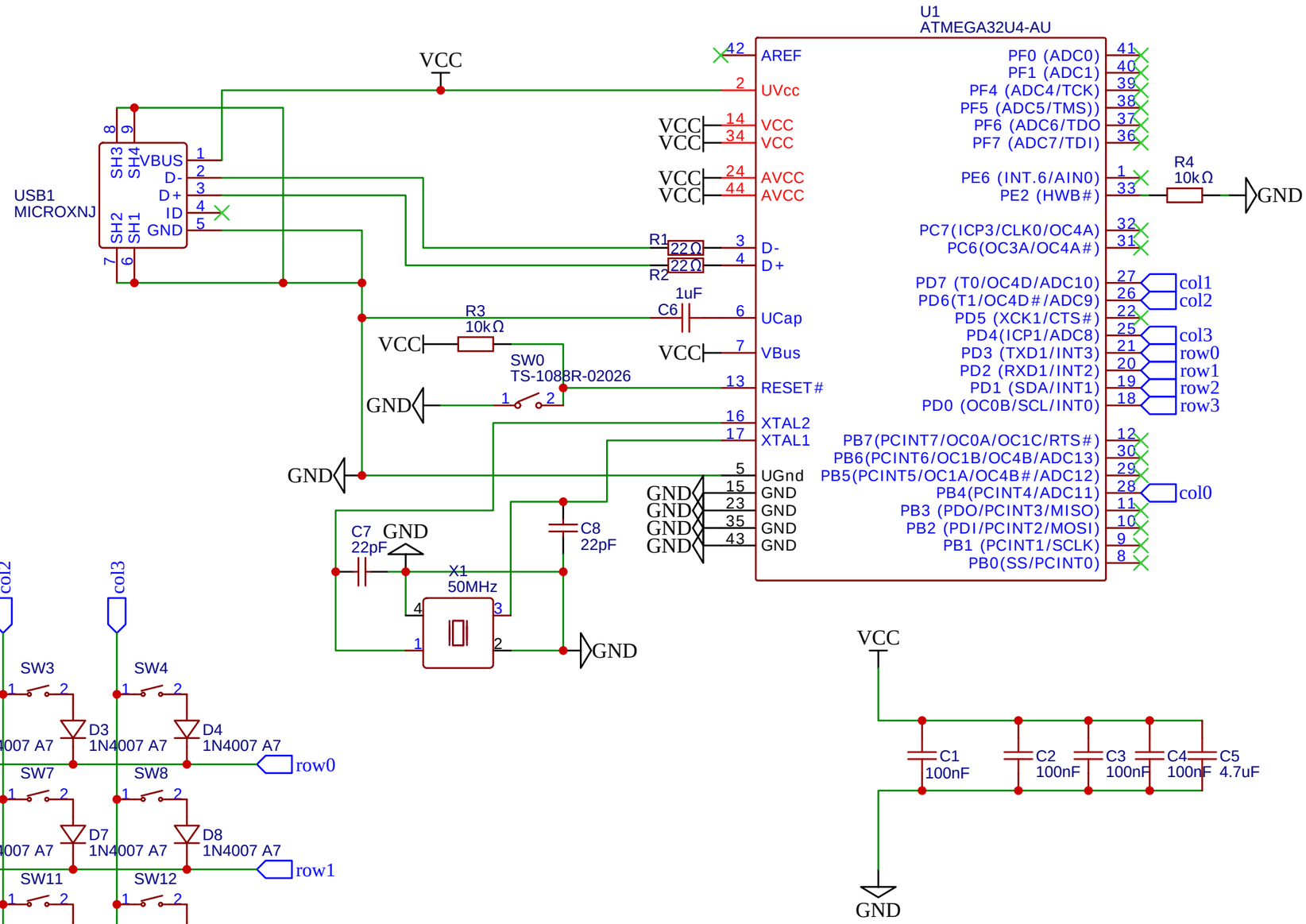

TITLE: keyboard	REV: 1.0
Company: bowie	Sheet: 1/1
Date: 2024-04-10 Drawn By: bowiedev	