ESP32_WITH_USB-C

USB-C CONNECTOR 1

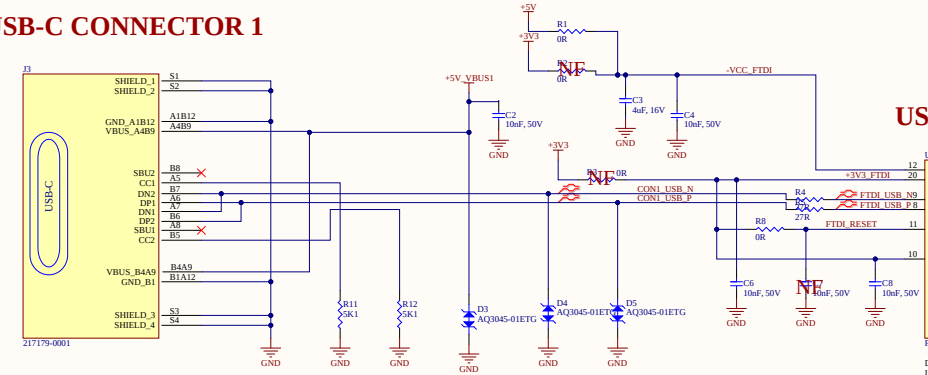

USB TO UART

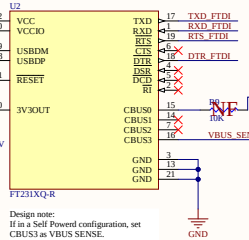

POWER LED

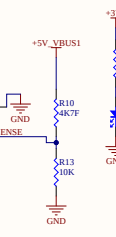

USER LED

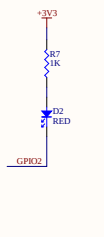

HEADERS

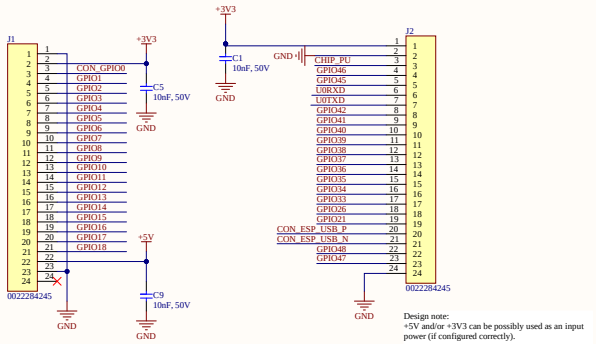

USB-C CONNECTOR 2

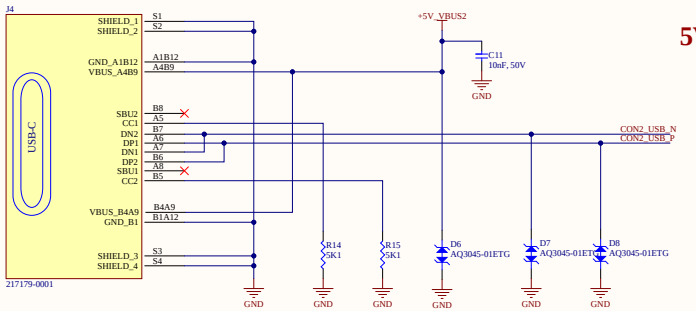

5V POWER SELECTION

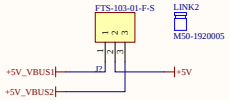

3V3 POWER SELECTION

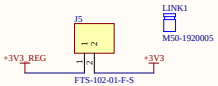

5V TO 3V3

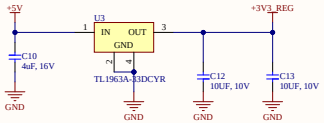

SERIAL SIGNALS HANDLING

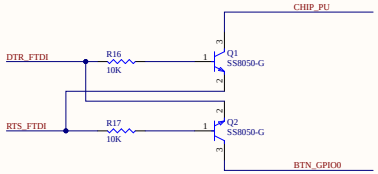

ESP32 MODULE

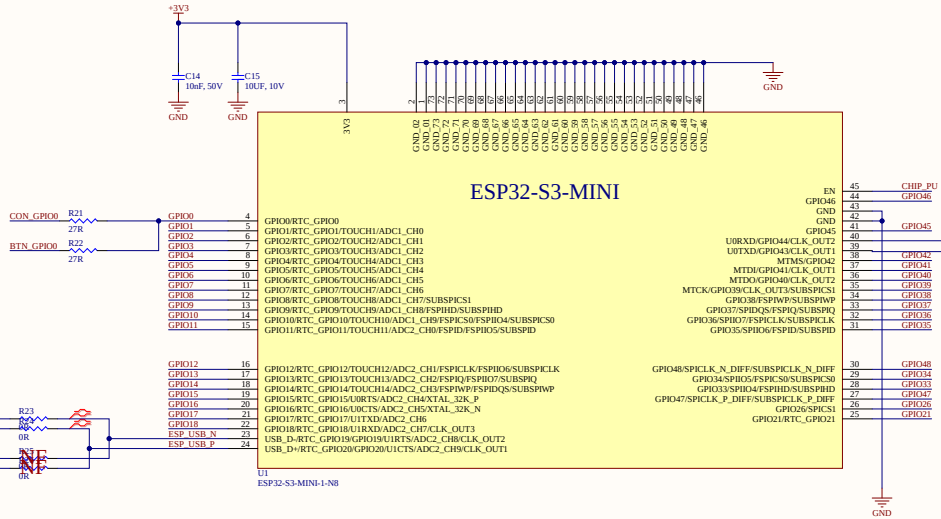

RESET BUTTON

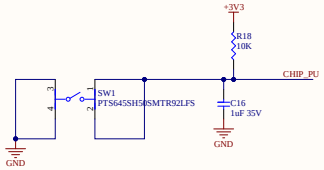

BOOT/USER BUTTON

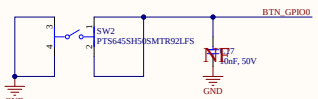

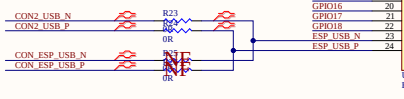

Title	ESP32_WITH_USB-C	(C)Designed By Siddharth.
Size A2	Number	Revision
Date: 3-02-2026	Sheet of	
File: C:\Users\...\PCB_Project1.SchDoc	Drawn By:	