2022 13th International Conference on Computing Communication and Networking Technologies (ICCCNT) | 978-1-6654-5262-5/22/$31.00 ©2022 IEEE | DOI: 10.1109/ICCCNT54827.2022.9984591

Design of High Speed 8-bit Vedic Multiplier using Brent Kung Adders

Aruru Sai Kumar[1], U. Siddhesh[2], N. Sai kiran [3] and K. Bhavitha[4]
[1,2,3,4]Department of ECE, VNR Vignana Jyothi Institute of Engineering and Technology, Hyderabad, India.
Email: asaikumar.nitw@gmail.com[1], uttarwarsiddhesh@gmail.com[2] and saikirannuthanaganti34@gmail.com[3]

***Abstract*—One of the primary purposes of a digital signal processing system is multiplication. The multiplier's performance affects the DSP system's overall performance. Therefore, it is crucial to create an effective and quick multiplier implementation design. Vedic mathematics can be used to simplify complex computations so that they are easier to perform verbally. Urdhva Triyambakam is the multiplication algorithm used in Vedic math. In this paper, we employing Brent Kung adder to enhance the Vedic multiplier's performance. The Urdhva Tiryagbhyam sutra is being used in place of other multiplication strategies since it applies to all instances of algorithms for N x N bit numbers and produces the least amount of latency. Four 4-bit vedic multipliers, two 8-bit Brent Kung adders, one 4-bit Brent Kung adder, and an OR gate are used to create an 8-bit vedic multiplier. A 4-bit vedic multiplier is created similarly by combining four 2-bit vedic multipliers, two 4-bit Brent Kung Adders, one 2-bit Brent Kung Adder, and one OR gate. These four-bit vedic multipliers are then combined to form an eight-bit vedic multiplier. After that, Xilinx Vivado Software is used to simulate and synthesis the 8 x 8 Vedic Multiplier, which was coded in Verilog HDL. The proposed Vedic Multiplier is outperformed in terms of speed when compared to related works.**

***Index Terms*—Vedic multiplier, Brent Kung adder, array multiplier, Wallace tree multiplier, Urdhva-Tiryagbhyam sutra.**

I. Introduction

Due to the rapid advancement of semiconductor technology, there is a growing need for embedded and portable Digital Signal Processing (DSP) devices. In practically every DSP application, multiplier plays a significant role. High speed DSP hence requires low power, high speed multipliers.To implement rapid multipliers, various algorithms have been documented in the literature.Another choice for developing an effective multiplier is the VEDIC multiplication algorithm. In VEDIC mathematics [1], there are three ways to perform multiplication. Urdhva-Triyakbhyam is the primary algorithm of Vedic multiplication. It is a universal multiplication formula that can be used in any circumstances. Vertically and crosswise is what it literally means. By multiplying two operands vertically and crosswise, and then adding the results, the VEDIC multiplier may multiply two operands [2].

Digital systems use a variety of multipliers, including array multipliers, dadda multipliers, Wallace tree multipliers, booth multipliers, and others. However, each of these multipliers has significant drawbacks, such as a large propagation latency or a high device consumption rate. Therefore, the construction of a high speed multiplier is necessary for quick computation.

A. Array Multiplier

A digital combinational circuit known as an array multiplier is used to multiply two binary values by using an array of full adders and half adders. The numerous product keywords involved are added almost simultaneously using this array. Before the Adder array, an array of AND gates is utilised to create the various product terms. A series of add and shift micro-operations are needed to perform a sequential operation that involves checking the multiplier's bits one at a time and creating partial products.In array multipliers, partial products are generated concurrently and combined with a final adder to generate the complete product. Its wiring and design are conventional. Consequently, it requires less space to implement. Linear circuit delay is included in array multipliers. It features a tight layout that makes it better suited for manufacture [3].

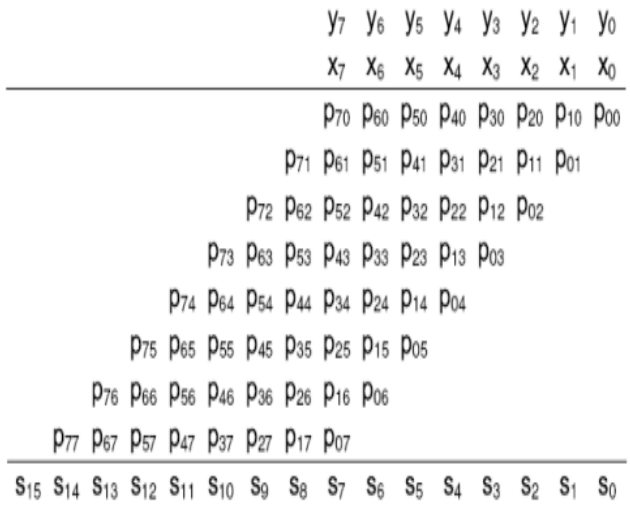

Fig. 1. 8 x 8 Array Multiplier

B. Dadda Multiplier

Dadda devised a reduction technique that produces the reduced two-row Partial products in the fewest possible reduction phases. Dadda was able to do this by strategically positioning the counters on the maximum Critical path. There is a N by N partial product for an N-bit multiplier and

Authorized licensed use limited to: Univ of Calif Santa Barbara. Downloaded on August 17,2025 at 13:36:53 UTC from IEEE Xplore. Restrictions apply.

multiplicand. These incomplete goods are organised into a matrix. Dadda went through a series of reduction processes to lower these Matrix height to a two-row matrix. The Working of multiplier is the backwards from the final two-row matrix, the dadda multiplier creates a series of matrix heights that are used to minimise the N by N partial product matrix. Each intermediate matrix's height is restricted to the smallest integer that is no greater than 1.5 times that of its succeeding matrix in order to achieve the fewest possible reduction phases [4].

C. Wallace Multiplier

One of the parallel multiplier systems that, in principle, lessens the number of adder phases required to achieve the summing of partial products is the Wallace multiplier scheme. This is achieved by employing full and half adders to decrease the matrix's row count and the number of bits used at each summing stage. The serial multiplication method slows down the operation overall, despite the Wallace multiplication having a predictable and less complex structure [5].

The document is structured in the manner described below. Literature works of various vedic multipliers are discussed in Section II. Section III discusses about existed Vedic multiplier and section IV explained the proposed Vedic Multiplier using Brent Kung adder(BKA). Section V explains simulation results and Section VI depicts the conclusion and future work.

II. Related Works

M N Chandrashekara et al. [6] created an 8-bit Vedic multiplier employing a modified carry save adder to compute the sum of partially formed products,. It demonstrates how employing a modified carry save adder can speed up the numerical technique when adding incomplete partial products. Compared to the Wallace Tree multiplier, Array multiplier, and 8 bit booth multiplier, this approach has a shorter delay.

Y. Harshavardhan et al., [7] implemented the Vedic multipliers by using different carry look ahead adders like regular carry look ahead adder, block carry look ahead adder, factorized carry look ahead adder, factorized block carry look ahead adders. First the architecture is implemented using regular carry look ahead adder and then the adders are replaced to do the comparison. The comparison is done taking only different carry look ahead adders but other fast adders like parallel prefix adders are not considered.

M. Bala Murugesh et al., [8] designed Vedic multiplier such that the delay and device utilization can be reduced. The modified Vedic multiplier is used for designing 2-bit , 4-bit , 8-bit , 16-bit and 32-bit inputs and then can be extended for higher order inputs. The adders in this model used are normal adders like ripple carry adders etc but high speed adders like parallel prefix adders are not considered.

Ankita Jain et al., [9] reviewed the different vedic multiplication algorithms like Urdhva Tiryagbhyam sutra , Nikhilam Sutra and Ekadhikena Purvena Method. The delay generated by these three algorithms are less than the conventional multipliers. The Nikhilam Sutra and Ekadhikena Purvena Method are used only for set of numbers but cannot be generalized for any number.

III. Existed Vedic Multiplier

Digital signal processing (DSP) and communication systems are two areas where the Vedic multiplier is used. It is also utilised in quick Fourier transforms, convolution, and an ALU of a CPU for image processing[10-18]. Based on 16 sutras of Vedic mathematics, which comprise the general multiplication formula Urdhva triyakbhyam, the Vedic multiplier is a fast multiplier. In ancient India, this sutra was utilised to multiply things quickly. Vedic Multiplier is a speedier but more effective multiplier. With a few modifications to the most significant bit, the Vedic multiplier's structure/block diagram resembles that of the array multiplier[19-24].

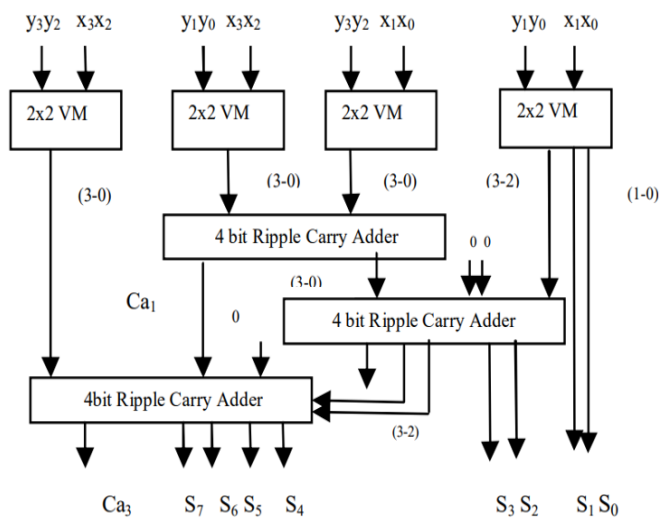

Fig. 2. Existed 8 x 8 Vedic Multiplier

For creating the 8 x 8 vedic multiplier, first 4 x 4 multipliers are designed and then three 8-bit ripple carry adders are designed. The 4-bit vedic multilpliers are designed using four 2 x 2 vedic multipliers and three 4-bit ripple carry adders. The 2 x 2 vedic multipliers are designed using four AND gates and two 2-bit adders. The existed 8 x 8 Vedic multiplier is depicted in Fig. 2.

IV. Proposed Methodology

The disadvantage with the existing model is that it uses ripple carry adder to compute the sum . Thus using these will increase the propagation delay. The adder with less delay and area is implemented using Brent Kung adder[25-27]. The second problem with the existing architecture is that it uses three n-bit adders to compute the result. Thus, in modified architecture we use two n-bit adders and one (n/2)-bit adder. The hardware required for proposed Vedic Multiplier using Brent Kung adder will be reduced and delay also be reduced [28-30].

The prefixes for 2 bit groups are calculated by the Brent Kung adder. With the assistance of these prefixes, it is possible to determine the prefixes for 4 bit sets, which are then used

Authorized licensed use limited to: Univ of Calif Santa Barbara. Downloaded on August 17,2025 at 13:36:53 UTC from IEEE Xplore. Restrictions apply.

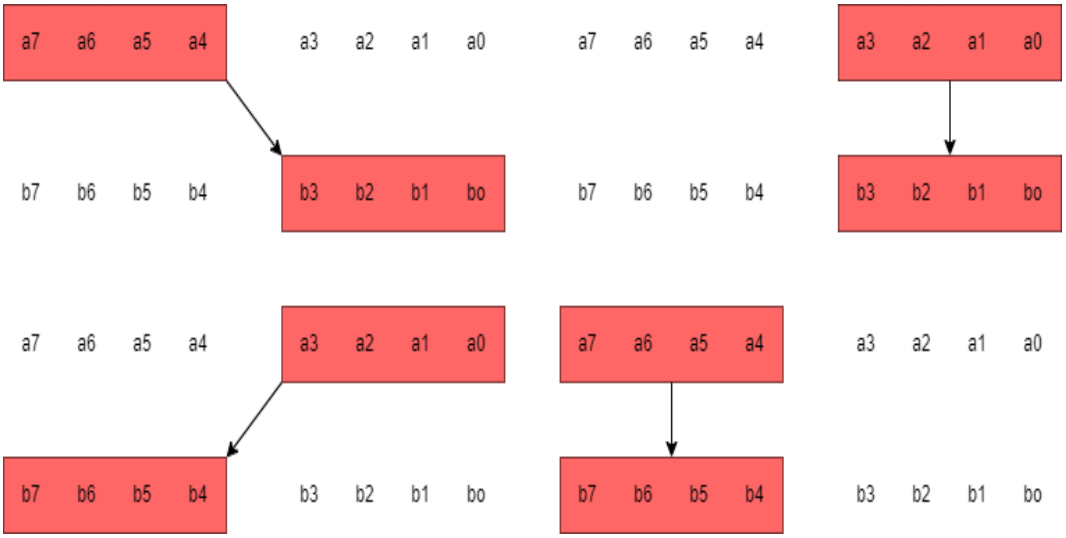

Fig. 3. Partial products for Proposed 8 x 8 Vedic Multiplier

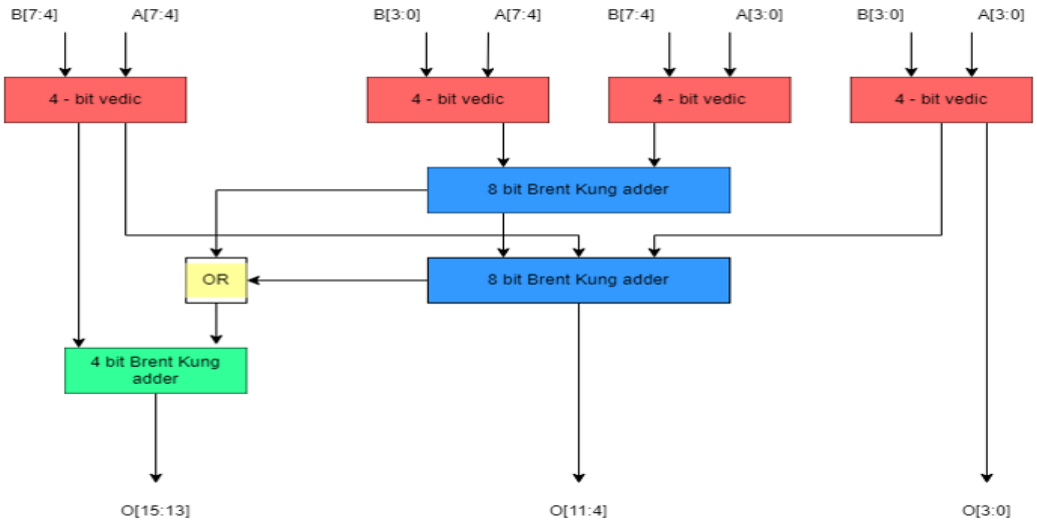

Fig. 4. Proposed 8 x 8 Vedic Multiplier

to determine the prefixes for 8 bit groups, and so on. In order to calculate the carry out of a specific bit stage, these prefixes are next needed. The Sum bit for that phase will be calculated using these carries and the Group Propagate of the following stage. Stages of 2log2(N - 1) will be used by Brent Kung Tree.

The level-equal partial products 2 and 3 are combined using an 8-bit Brent Kung Adder. The output of this adder is combined with the four LSB bits from the fourth partial product and the four MSB bits from the first partial product using another 8-bit Brent Kung adder. The carry produced by this adder is combined with the four MSB bits of the fourth subpart using a 4-bit Brent Kung Adder. Fig. 3 shows the creation of four partial products. The first partial products are produced by multiplying a[3:0] and b[3:0].Multiplication of a[7:4] and b[3:0] produces the second partial product.The third partial product is produced by multiplying a[3:0] and b[7:4].The fourth partial product of a[7:4] and b[7:4] is multiplication.

V. Simulation Analysis

The 8 × 8 Vedic Multiplier is coded in Verilog HDL, simulated and synthesized using Xilinx Vivado 14.7 Software. Fig. 5 and Fig. 6 depicts the RTL Schematic and simulation waveform of proposed 8 x 8 Vedic Multiplier. In the proposed 8 x 8 Vedic multiplier, partial products are added using the Brent Kung parallel prefix adder (BKA), while multiplication is performed using the Urdhva Tiryagbhyam method. In this proposed model, 32 HA, 64 AND Gates, three 4-bit BKAs, two 8-bit BKAs, and one 2-bit BKA are employed. Table 1 compares the proposed vedic multiplier to a number of different multipliers. Comparing many other multipliers with

Authorized licensed use limited to: Univ of Calif Santa Barbara. Downloaded on August 17,2025 at 13:36:53 UTC from IEEE Xplore. Restrictions apply.

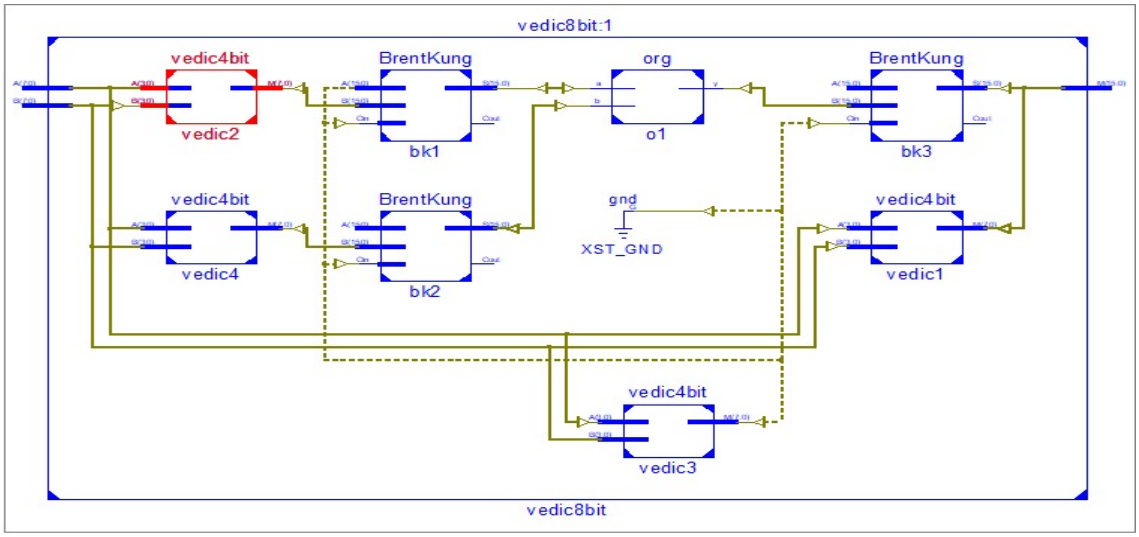

Fig. 5. RTL Schematic for proposed 8 x 8 Vedic Multiplier

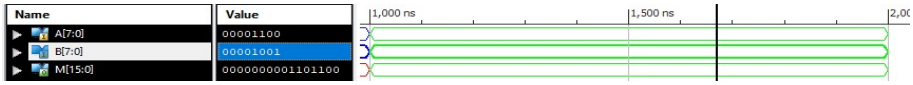

Fig. 6. simulation waveform of proposed 8 x 8 Vedic Multiplier

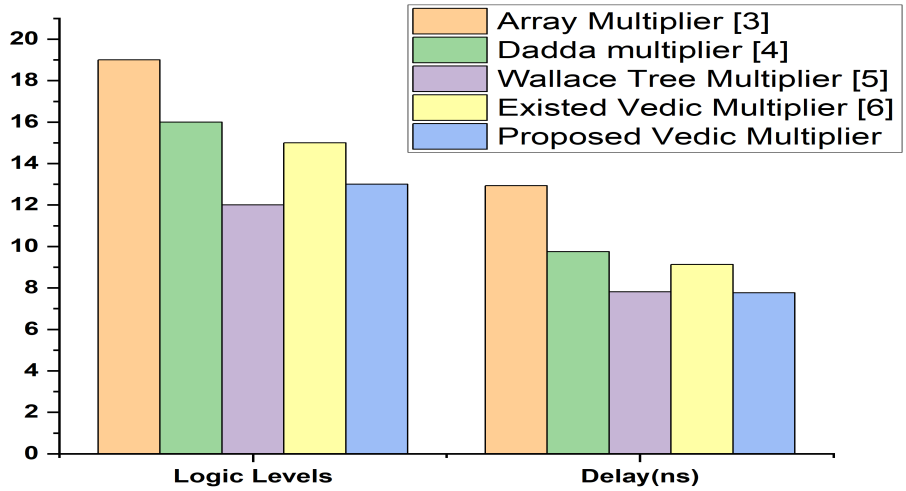

Fig. 7. Comparision of the proposed 8 x 8 Vedic Multiplier with other multipliers

the proposed vedic multiplier in terms of logic levels and delay(ns) is shown in Fig. 7.

VI. Conclusion and Future Work

A High speed 8 x 8 Vedic Multiplier has been designed using Verilog HDL, simulated and synthesized using Xilinx Design Suite 14.7. In the proposed 8 x 8 Vedic multiplier, the Urdhva Tiryagbhyam algorithm is utilised for multiplication, and the Brent Kung parallel prefix adder (BKA) is employed for the addition of partial products. In this proposed model, 32 HA, 64 AND Gates, three 4-bit BKAs, two 8-bit BKAs, and one 2-bit BKA are employed. This proposed 8 x 8 Vedic multiplier using Brent Kung parallel prefix adder (BKA) reduces complexity, latency, delay and area requirement while

Authorized licensed use limited to: Univ of Calif Santa Barbara. Downloaded on August 17,2025 at 13:36:53 UTC from IEEE Xplore. Restrictions apply.

TABLE I
COMPARISON OF VARIOUS OTHER MULTIPLIERS WITH PROPOSED VEDIC MULTIPLIER

Multiplier	Logic Levels	Delay(ns)
Array multiplier[3]	19	12.934
Dadda multiplier[4]	16	9.745
Wallace Tree Multiplier[5]	12	7.815
Existed Vedic multiplier [6]	15	9.130
Proposed Vedic multiplier	13	7.762

improving the speed of the system when compared to other multipliers.

In Future, we are planning to implement the floating point multiplier by employing this proposed Vedic multiplier using Brent Kung parallel prefix adder (BKA). It is possible to use a floating point multiplier with either single or double precision. High speed DSP algorithms like the wavelet transform can be implemented using this multiplier. Additionally, since the algorithm for each n-bit multiplier is the same, we may apply ML algorithms to develop higher order multipliers.

REFERENCES

[1] G. Ganesh Kumar and V. Charisma, "Design of High-Speed Vedic Multiplier using Vedic Mathematics Techniques", International Journal of Scientific and Research Publications, vol. 2, no. 3, March 2012.

[2] G. Challa Ram, Y. Rama Lakshmanna, D. Sudha Rani and K. Bala Sindhuri, "Area Efficient Modified Vedic Multiplier", Proceedings of IEEE International Conference on Circuit Power and Computing Technologies (ICCPCT), 18–19 March 2016.

[3] Baugh, Charles Richmond and Bruce A. Wooley, "A Two's Complement Parallel Array Multiplication Algorithm", IEEE Transactions on Computers, vol. 22, no. 12, pp. 1045-1047, 1973.

[4] K. Naresh, Y. P. Sai and S. Majumdar, "Design of 8-bit Dadda Multiplier using Gate Level Approximate 4:2 Compressor," 2022 35th International Conference on VLSI Design and 2022 21st International Conference on Embedded Systems (VLSID), 2022, pp. 269-274, doi: 10.1109/VLSID2022.2022.00059.

[5] S. Nagaraj, K. Thyagarajan, D. Srihari and K. Gopi, "Design and Analysis of Wallace Tree Multiplier for CMOS and CPL Logic," 2018 International Conference on Computation of Power, Energy, Information and Communication (ICCPEIC), 2018, pp. 006-010, doi: 10.1109/ICCPEIC.2018.8525224.

[6] M. N. Chandrashekara and S. Rohith, "Design of 8 Bit Vedic Multiplier Using Urdhva Tiryagbhyam Sutra With Modified Carry Save Adder," 2019 4th International Conference on Recent Trends on Electronics, Information, Communication Technology (RTEICT), 2019, pp. 116-120, doi: 10.1109/RTEICT46194.2019.9016965.

[7] Y. Harshavardhan, S. Nagaraj, S. Jaahnavi and T. M. Reddy, "Analysis of 8-bit Vedic Multiplier using high speed CLA Adder," 2020 2nd International Conference on Innovative Mechanisms for Industry Applications (ICIMIA), 2020, pp. 128-132, doi: 10.1109/ICIMIA48430.2020.9074953.

[8] M. B. Murugesh, S. Nagaraj, J. Jayasree and G. V. K. Reddy, "Modified High Speed 32-bit Vedic Multiplier Design and Implementation," 2020 International Conference on Electronics and Sustainable Communication Systems (ICESC), 2020, pp. 929-932, doi: 10.1109/ICESC48915.2020.9155882.

[9] A. Jain and A. Jain, "Design, implementation comparison of vedic multipliers with conventional multiplier," 2017 International Conference on Energy, Communication, Data Analytics and Soft Computing (ICECDS), 2017, pp. 1039-1045, doi: 10.1109/ICECDS.2017.8389596.

[10] Aruru Sai Kumar, T.V.K. Hanumantha Rao, "Scalable benchmark synthesis for performance evaluation of NoC core mapping", Microprocessors and Microsystems, Volume 79, November 2020.

[11] Aruru Sai Kumar, T.V.K. Hanumantha Rao, "An Adaptive Core Mapping Algorithm on NoC for Future Heterogeneous System-on-Chip", Computers and Electrical Engineering, Volume 95, October 2021.

[12] A. S. Kumar, T. V. K. Hanumantha Rao and B. N. Kumar Reddy, "Exact Formulas for Fault Aware Core Mapping on NoC Reliability," 2020 IEEE 17th India Council International Conference (INDICON), pp. 1-5, 2020.

[13] A. S. Kumar et al., "Performance and communication energy constrained embedded benchmark for fault tolerant core mapping onto NoC architectures", International Journal of Ad Hoc and Ubiquitous Computing, vol. 41, no. 2, pp. 108-117, 2022.

[14] A. S. Kumar and T. V. K. H. Rao, "Efficient Core Mapping on Customization of NoC Platforms," 2019 IEEE International Symposium on Smart Electronic Systems (iSES) (Formerly iNiS), pp. 57-62, 2019.

[15] Kumar, A.S., Naresh Kumar Reddy, B. "An Efficient Real-Time Embedded Application Mapping for NoC Based Multiprocessor System on Chip", Wireless Personal Communications, 2022. https://doi.org/10.1007/s11277-022-10080-x.

[16] Aruru Sai Kumar and T. V. K. Hanumantha Rao, "An efficient low latency router architecture for mesh based NoC", in International Conference on Communications, Signal Processing and VLSI (IC2SV-2019), NIT Warangal, India, pp. 241-248, 2021.

[17] Aruru Sai Kumar, T.V.K. Hanumantha Rao, "Performance assessment of adaptive core mapping for NoC-based architectures", International Journal of Embedded Systems, Vol. 15, No. 5, 2022.

[18] B. N. K. Reddy, M. H. Vasantha and Y. B. Nithin Kumar, "A Gracefully Degrading and Energy-Efficient Fault Tolerant NoC Using Spare Core," 2016 IEEE Computer Society Annual Symposium on VLSI (ISVLSI), pp. 146-151, 2016.

[19] Naresh Kumar Reddy Beechu et al., "An energy-efficient fault-aware core mapping in mesh-based network on chip systems", Journal of Network and Computer Applications, Vol 105, pp. 79-87, 2017.

[20] Naresh Kumar Reddy Beechu, Vasantha Moodabettu Harishchandra, Nithin Kumar Yernad Balachandra, "System level fault-tolerance core mapping and FPGA-based verification of NoC", Microelectronics Journal, Vol 70, pp. 16-26, 2017.

[21] B. Naresh Kumar Reddy et al.,"High-performance and energy efficient fault-tolerance core mapping in NoC", Sustainable Computing: Informatics and Systems, Vol 16, pp. 1-10, 2017.

[22] B. N. K. Reddy and S. Kar, "Machine Learning Techniques for the Prediction of NoC Core Mapping Performance," 2021 IEEE 26th Pacific Rim International Symposium on Dependable Computing (PRDC), 2021, pp. 1-4, 2021.

[23] B. N. Kumar Reddy and S. Kar, "An Efficient Application Core Mapping Algorithm for Wireless Network-an-Chip," 2021 IEEE 26th Pacific Rim International Symposium on Dependable Computing (PRDC), 2021, pp. 157-160, 2021.

[24] Reddy, B.N.K., "Design and implementation of high performance and area efficient square architecture using Vedic Mathematics", Analog integrated circuits and signal processing, 102(3), pp.501-506, 2020.

[25] Beechu, N.K.R., Moodabettu Harishchandra, V. Yernad Balachandra, "Hardware implementation of fault tolerance NoC core mapping," Telecommunication Systems, 2017.

[26] Rao, N., Rao, T.S. and Kumar, A.S., " Analysis for saturation throughput using various mechanisms for IEEE 802.11 WLAN's", Int. J. Res. Appl. Sci. Eng. Technol, 2(5), 2015.

[27] Arulananth, T.S. et al., "Evaluation of low power consumption network on chip routing architecture", Microprocessors and Microsystems, Volume 82, 2021.

[28] Kumar, A.S. and Kumari, B.P., "Implementation of High speed and Low power 6T SRAM cell using FinFET at 22nm technology", Vol. 5 No. 12, 2016.

[29] A Sai Kumar et al., "A Robust Algorithm for Digital Image copyright protection", International Journal of Electrical and Electronic Engineering Telecommunications, Vol. 3, No. 3, 2014.

[30] A. Sai Kumar, G. Venkata Muralikrishna, "Development of effective method for agriculture monitoring using WSN and IOT", International Journal of Research, Vol 2, No 8, pp. 271-278, 2015.

Authorized licensed use limited to: Univ of Calif Santa Barbara. Downloaded on August 17,2025 at 13:36:53 UTC from IEEE Xplore. Restrictions apply.