THADOMAL SHAHANI ENGINEERING COLLEGE
DEPARTMENT OF
Artificial Intelligence & Data Science

Name of Student	:	**Siddhi Thakur**
Class	:	**SE**
Division	:	**S2**
Roll Number	:	**122**
Batch	:	**S23**
Subject	:	**Fundamentals of Telecommunication Systems**
Experiment Number	:	**11**
Experiment Title	:	**Implementation and Testing of Error Detection Using Parity Checking**
Date of Performance	:	**16th March 2026**
Date of Submission	:	**30th March 2026**

of

Experiment No. 11

Title: Implementation and Testing of Error Detection Using Parity Checking

Aim

To design, implement, and verify a 3-bit Even Parity Generator and a 4-bit Even Parity Checker circuit using the IIT Kharagpur Virtual Lab simulator.

Source

IIT Kharagpur Virtual Lab — Parity Checker and Generator:

https://dlcd-iitkgp.vlabs.ac.in/exp/parity-checker-generator/

Theory

Error detection is a crucial part of telecommunication systems. During transmission, noise in the channel can flip a bit (changing a '0' to a '1' or vice versa). Parity checking is the simplest method used to detect such single-bit errors.

Parity Bit and Types

A parity bit is an extra bit added to a binary message to make the total number of 1s either even or odd.

- ***Even Parity:*** The parity bit is chosen such that the total number of 1s in the transmitted block (message + parity) is **even**.
- ***Odd Parity:*** The parity bit is chosen such that the total number of 1s in the transmitted block is **odd**.

Even Parity Generator

For a 3-bit message (A, B, C), the even parity bit P is generated such that the total number of 1s in the 4-bit transmitted word (A, B, C, P) is even. The Boolean expression is:

$\mathbf{P = A \oplus B \oplus C}$ where $\oplus$ denotes the Exclusive-OR (XOR) operation. P = 0 if the number of 1s in A, B, C is already even; P = 1 if the number of 1s is odd (to make the total even).

Truth Table: Even Parity Generator (3-bit message)

A	B	C	No. of 1s	P (Even Parity)
0	0	0	0	0
0	0	1	1	1
0	1	0	1	1
0	1	1	2	0
1	0	0	1	1
1	0	1	2	0
1	1	0	2	0
1	1	1	3	1

Even Parity Checker

At the receiver, the 4-bit received word (A, B, C, P) is checked. The error detection output E is:

$$E = A \oplus B \oplus C \oplus P$$

E = 0 indicates no error (even number of 1s in the received word). E = 1 indicates an error has been detected (odd number of 1s). Note that parity checking can detect only single-bit (odd number of) errors; it cannot detect double-bit errors or identify the error location.

Truth Table: Even Parity Checker (4-bit received word)

A	B	C	P	No. of 1s	E (Error = 1)
0	0	0	0	0	0

0	0	0	1	1	1
0	0	1	0	1	1
0	0	1	1	2	0
0	1	0	0	1	1
0	1	0	1	2	0
0	1	1	0	2	0
0	1	1	1	3	1
1	0	0	0	1	1
1	0	0	1	2	0
1	0	1	0	2	0
1	0	1	1	3	1
1	1	0	0	2	0
1	1	0	1	3	1
1	1	1	0	3	1
1	1	1	1	4	0

Procedure

Open the Virtual Lab experiment at the URL given under Source. Follow the steps below:

- ***Familiarise with the simulator:*** Before designing the circuits, read the simulator manual provided in the virtual lab. It explains how to place logic gates, make connections, assign inputs, and observe outputs.
- ***Design the Parity Generator circuit:*** Using the online simulator, implement the even parity generator circuit for a 3-bit message (A, B, C) as described in the Theory section of the virtual lab. The circuit requires two XOR gates connected in cascade: the first XOR gate takes A and B as inputs; its output and C are fed to the second XOR gate to produce the parity bit P.
- ***Verify the Parity Generator:*** Apply all eight 3-bit input combinations (000 to 111) one at a time and verify that the parity bit output P matches the values in the Even Parity Generator truth table given above.
- ***Design the Parity Checker circuit:*** Using the online simulator, implement the even parity checker circuit for a 4-bit received word (A, B, C, P). The circuit requires three XOR gates in cascade: gate 1 takes A and B; gate 2 takes the output of gate 1 and C; gate 3 takes the output of gate 2 and P, producing the error detection output E.
- ***Verify the Parity Checker:*** Apply selected 4-bit input combinations and verify that E = 0 for valid (error-free) received words and E = 1 for words with a single-bit error, consistent with the Even Parity Checker truth table given above.

Observations

Even Parity Generator (3-bit message) :

1. **INPUT :**

   A = 1, B = 1, C = 1

   OUTPUT :

   P = 1

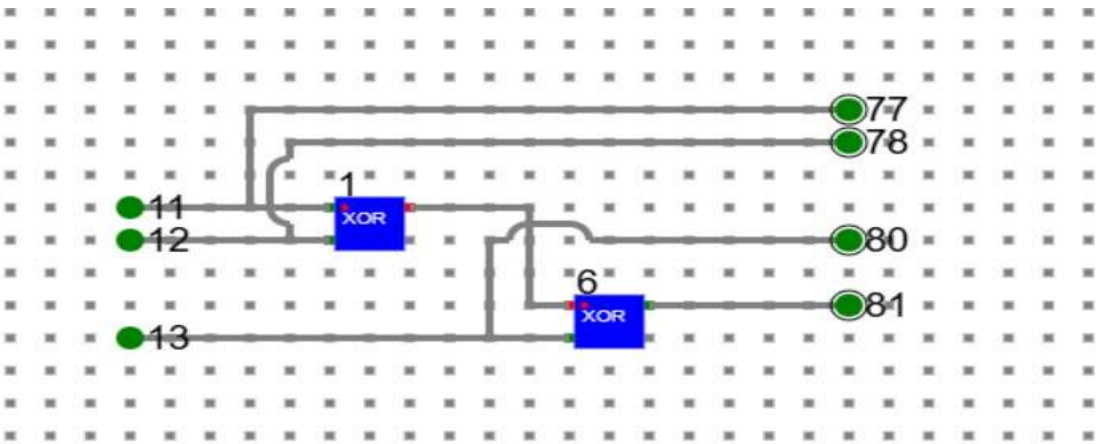

2. **INPUT :**

   A = 1, B = 1, C = 0

   OUTPUT :

   P = 0

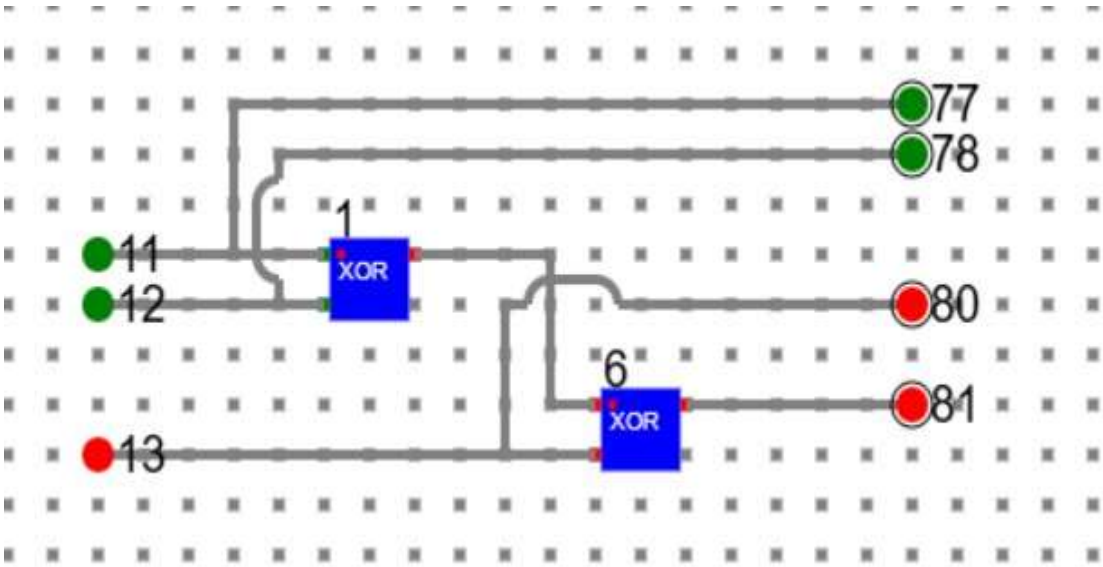

Even Parity Checker (4-bit received word) 1.

NO ERROR

INPUT :

A = 1, B = 1, C = 1, P = 1

OUTPUT :

E = 0

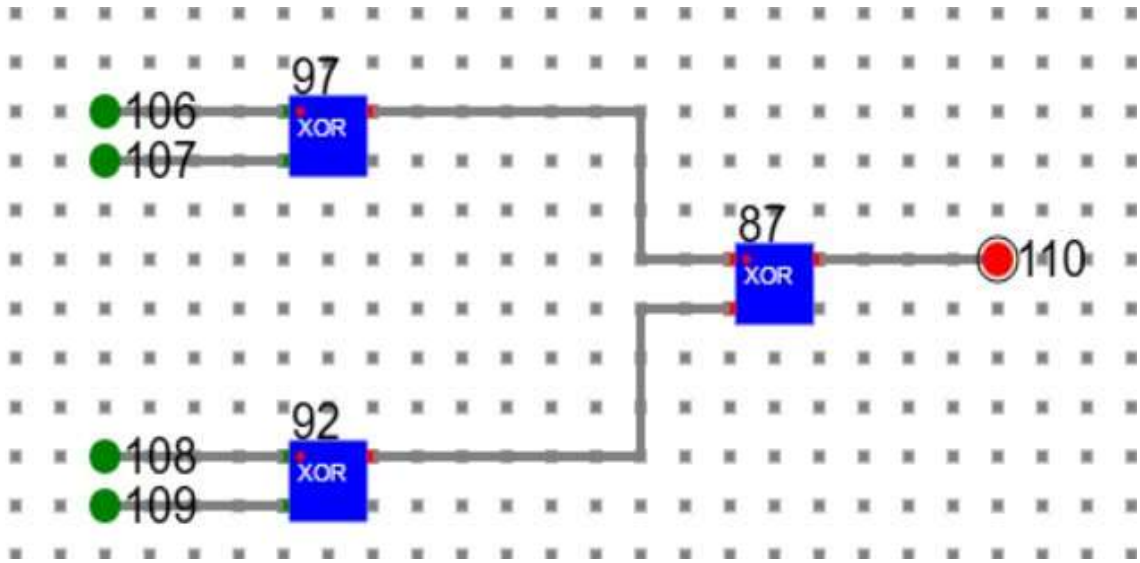

2. ERROR

INPUT :

A = 0, B = 0, C = 0, P = 1

OUTPUT :

E = 1

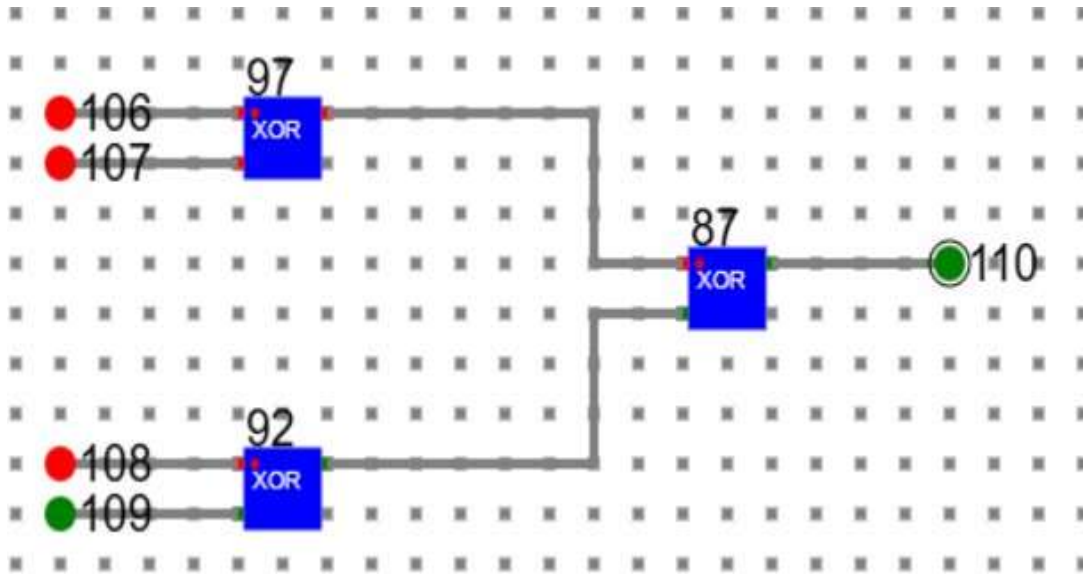

Conclusion

The even parity generator and even parity checker circuits were designed and tested using the IIT Kharagpur Virtual Lab simulator.

- ***Parity Generator:*** The circuit correctly generated the even parity bit $P = A \oplus B \oplus C$ for all eight 3-bit message combinations, ensuring that the total number of 1s in the transmitted 4-bit word (A, B, C, P) is always even.
- ***Parity Checker:*** The circuit correctly computed $E = A \oplus B \oplus C \oplus P$. $E = 0$ was obtained for all valid (error-free) received words and $E = 1$ for words containing a single-bit error, confirming successful error detection.

The experiment demonstrates that parity checking is a simple and effective method for single-bit error detection. Its limitation is that it cannot detect an even number of bit errors and cannot identify the location of the error.