Use of various types of cell

Objectives: At the end of this exercise you shall be able to
- **read and interpret the different type of cells from the chart or physically available cells**
- **name the cells, parts and uses.**

Requirements

Equipments
- Different types of cells - 1 each

Materials
- Chart showing different types of cells - 1 No.

PROCEDURE

Instructor may arrange the available different types of cells on the table. Explain the types of cells and their uses

1 Identify the type of cell and write their names to corresponding cell placed on the table or by referring from chart as in Table1 (Fig 1 to Fig 6)

2 Write the name of the parts against the number and uses in the blank space provided against each cell in table 1.

Table 1

Sketches	Name of Cell	Parts of cell	Uses
Fig 1 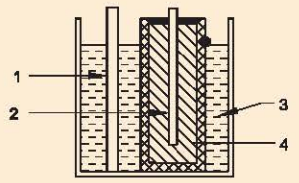		1 2 3 4	
Fig 2 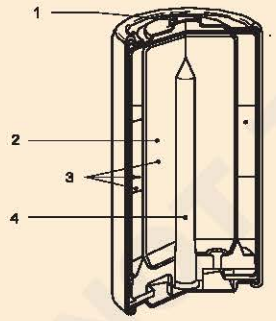		1 2 3 4	
Fig 3 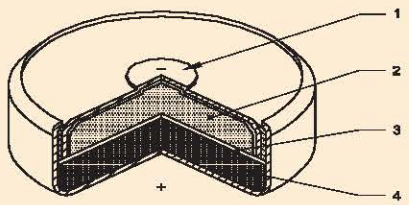		1 2 3 4	

© NIMI NOT TO BE REPUBLISHED

Sketches	Name of Cell	Parts of cell	Uses
Fig 4 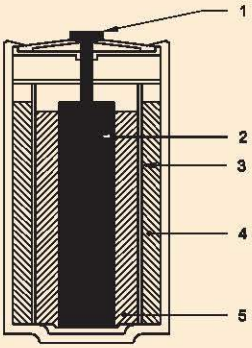		1 2 3 4 5	
Fig 5 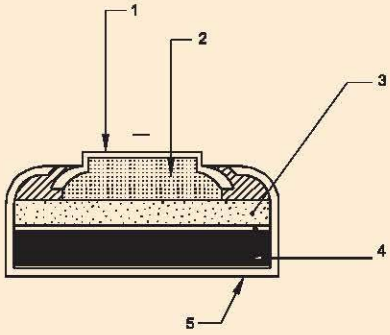		1 2 3 4 5	
Fig 6 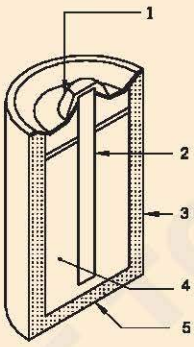		1 2 3 4 5	

3 Get it checked by your instructor.

© NIMI NOT TO BE REPUBLISHED

Practice on grouping of cells for specified voltage and current under different conditions and care

Objectives: At the end of this exercise you shall be able to
- **make grouping of cells in series connection**
- **make grouping of cells in parallel connection**
- **make grouping of cells in series and parallel connection.**

Requirements

Tools/Instruments

- MC Ammeter 0-1A - 1 No.
- MC Voltmeter 0-15V - 1 No.
- MC Ammeter 500 mA - 1 No.
- Multimeter - 1 No.
- Rheostat 20 ohms 3.7A - 1 No.

Materials

- Cells 1.5V - 8 Nos.
- SP Switch 6A, 250V - 4 Nos
- Connecting leads - as reqd.
- Resistor 5 Ω , 10W - 1 No.
- 4 Cell battery pack - 2 Nos.
- miniature lamp 6V / 9V, 300 mA - 1 No.
- Resistor 10 Ω , 10W - 1 No.

PROCEDURE

TASK 1 : **Grouping of cells in series connection**

1 Check the individual cells for their condition.
- Select 500 mA DC current range in mulimeter or 500 mA DC ammeter.
- Connect the cell across the meter in series with a 3 ohm resistor.
- Watch the deflection.

Full deflection shows good condition of cell. Low deflection shows disharged condition of the cell.

Cells having a higher internal resistance should not be used for series connection.

Care should be taken for the cells polarity.

2 Connect the cells as shown in Fig 1.

3 Measure the voltage of one cell V_1, two cells V_2, three cells V_3 and four cells V_4 connected in series.

4 Record your observations in the first and second columns of Table 1.

Fig 1

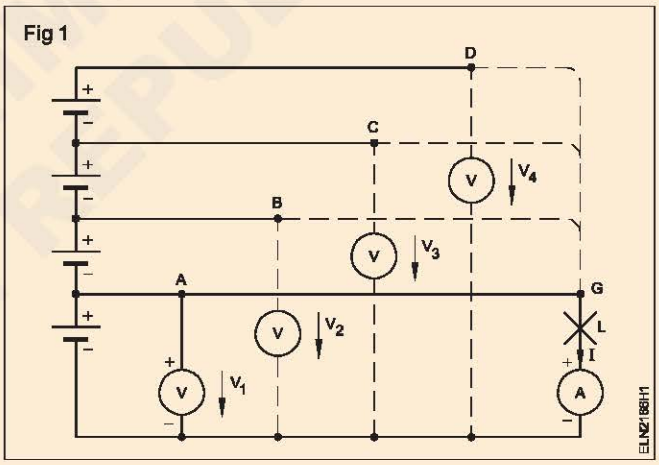

5 Connect the terminal 'G' to the terminal A and observe the ammeter reading and the glow condition of the lamp.

6 Change the contact of termnal ' G' terminals B,C and D in succession.

7 Record your observations under the columns 3 & 4 in Table 1

Table 1

Sl No.	No. of cells in series	Voltmeter reading	Ammeter reading	Glow
1				
2				
3				
4				

© NIMI NOT TO BE REPUBLISHED

TASK 2: **Grouping of cells in parallel connection**

1 Check the voltage of each cell.

2 Form the circuit as shown in Fig 2.

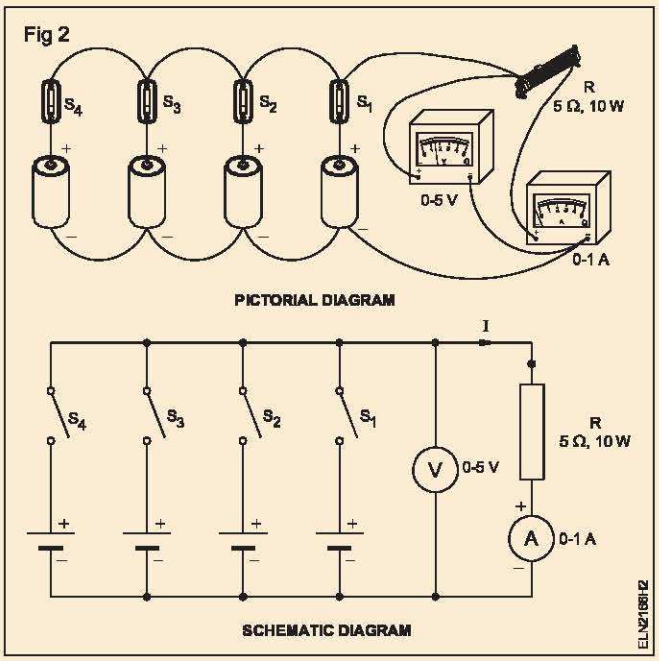

3 Close the switch S_1 and measure voltage and current. Record the values in Table 2, under columns 2, 3 and 4.

Table 2

Sl. No.	No. of Cells in Parallel	V	I

4 Check and record the readings of V and I after closing switch S_2, then S_3, and S_4 in succession.

Unequal voltage cells cannot be connected in parallel.

Conclusion

When cells of equal voltage are connected in parallel the terminal voltage is equal to _____

As the load current is shared by the cells in parallel, the terminal voltage across the load is _____ when compared to a single cell supplying current to the same load.

The effect of a number of cells in parallel to a given load.

_____

_____

_____

© NIMI NOT TO BE REPUBLISHED

Prepare and practice on battery charging and details of charging circuit

Objectives: At the end of this exercise you shall be able to
- **connect and charge the battery by using a battery charger**
- **connect and charge the battery by the constant current method**
- **connect and charge the battery by the constant potential method**
- **prepare electrolyte.**

Requirements

Tools/Instruments

- Cutting plier 150 mm - 1 No.
- Screw driver 150 mm - 1 No.
- MC Voltmeter 0-15V - 1 No.
- MC Ammeter 0-10A - 1 No.
- Hydrometer - 1 No.
- High rate discharge tester - 1 No.

Equipment/Machines

- Battery charger for 12V - 1 No.
- Low voltage DC power supply 0-30 volts 10A. - 1 No.
- Variable resistor 10 ohms, 5A capacity - 1 No.
- Battery 12V lead acid type - 1 No.

Materials

- Distilled water - 1 bottle (450ml)
- Petroleum jelly - as reqd.
- Sandpaper - as reqd.
- Test leads with crocodile clips - 1 pair
- Clips - 1 pair
- concentrated sulphuric acid - 100 ml
- Clean jar for mixing 1 litre capacity - 2 Nos.
- Cotton Waste - as reqd.
- Soda bi-carbonate - as reqd.

PROCEDURE

TASK 1 : **Charging a battery using a battery charger**

1 Clean the battery terminals, if corroded, with sandpaper : if sulphated, clean with wet cotton waste or with soda bicarbonate.

Do not damage the battery terminal by scraping with any metal strip.

2 Unscrew all the vent plugs and check the level of the electrolyte.

Do not clean the battery top surface keeping the vent plugs open. The accumulated dirt may fall inside the cells and form sediments.

3 Top up the electrolyte to the marked level in all the cells with distilled water.

No electrolyte to be used to top up battery.

4 Check the initial specific gravity of the electrolyte of each cell using a hydrometer (Fig 1) and record in Table 1.

5 Measure the cell voltage and the battery voltage with a voltmeter and record in the Table 1.

Do not use a high rate discharge tester for measuring voltage.

Fig 1

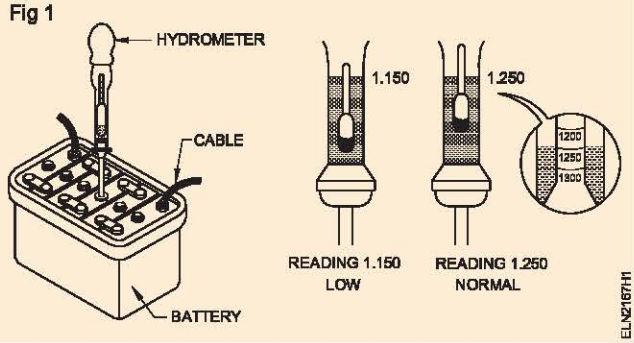

6 Connect the battery charger's +ve lead to the +ve terminal of the battery and the -ve lead of the charger to the -ve terminal of the battery. (Fig 2)

7 Adjust the battery charger output voltage equal to or a little higher than the voltage of the battery to be charged.

8 Set the charger voltage to produce the determined value of initial charging current.

Follow the manufacturer's recommendation for current setting for charging as well as discharging.

© NIMI NOT TO BE REPUBLISHED

Fig 2

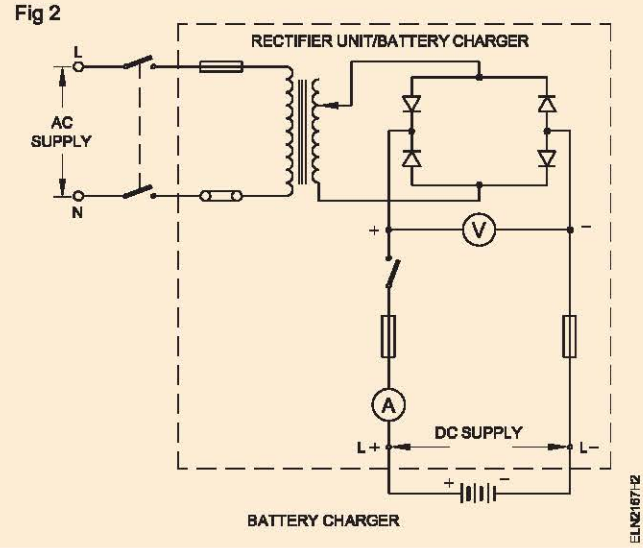

9 Check the voltage of each cell of the battery and specific gravity of the electrolyte at regular intervals (say ONE hour).

Remove the vent plug to enable the gas to escape.

10 Disconnect the battery when fully charged. Fit the vent plugs, clean the outer surface with wet cloth. Apply petroleum jelly to the terminals.

11 Check the battery for its working voltage under load using a high rate discharge tester for a short period. (Fig 3)

Do not keep a high rate discharge tester for along period, say more than five seconds.

Fig 3

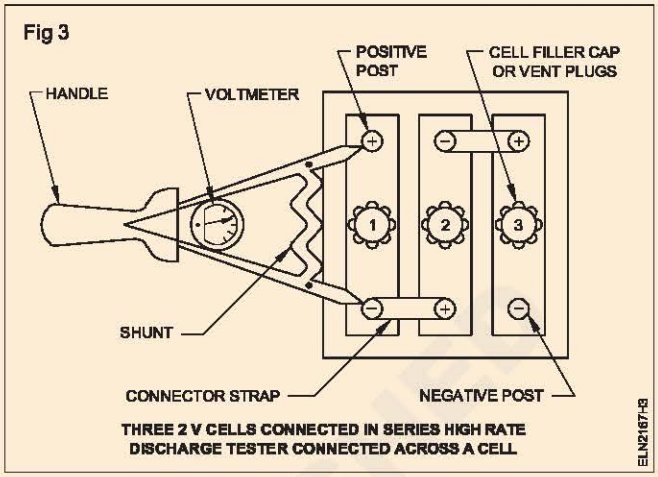

Table 1

Cell No.	Initial condition		Charged condition after									
	Specific gravity	Voltage	1 Hr		2 Hrs		3 Hrs		4 Hrs		5 Hrs	
			SP	V	SP	V	SP	V	SP	V	SP	V
1												
2												
3												
4												
5												
6												

— — — — — — — —

TASK 2 : **Charge a battery by constant current method**

1 Form the circuit as shown in Fig 4.

2 Clean the battery terminals and unscrew all the vent plugs.

3 Check the level of the electrolyte and top up.

4 Check the specific gravity and voltage of each cell and record and prepare a blank table (as shown in Table 1).

5 Connect the given batteries in series with the lamp bank as per Fig 4.

6 Adjust the current rating through the lamp bank.

7 Set the lamp bank to produce the determined value of the initial charging current.

Don't touch the battery terminals since the circuit is connected to 220V DC.

Proper protective devices should be provided in the circuit.

8 Read the voltage and specific gravity of each cell at regular intervals and record in Table 1.

9 Repeat the steps 10 and 11 of Task 1.

NOT TO BE REPUBLISHED © NIMI

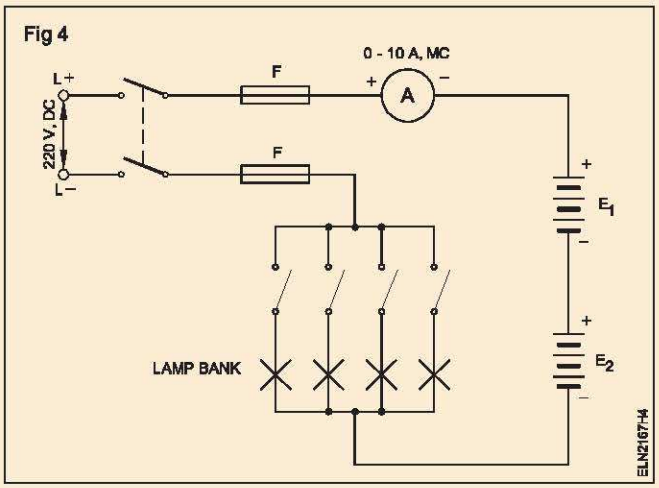

TASK 3 : **Charge a battery by constant potential method**

1 Form the circuit as shown in Fig 5.

2 Repeat the steps 2 to 4 of Task 2.

3 Adjust the voltage by adjusting the rheostat to the required value.

4 Read and record the voltage, current and specific gravity at regular intervals in Table 3. (Prepare a blank table as shown in Table 1)

5 Repeat the steps 10 and 11 of Task 1.

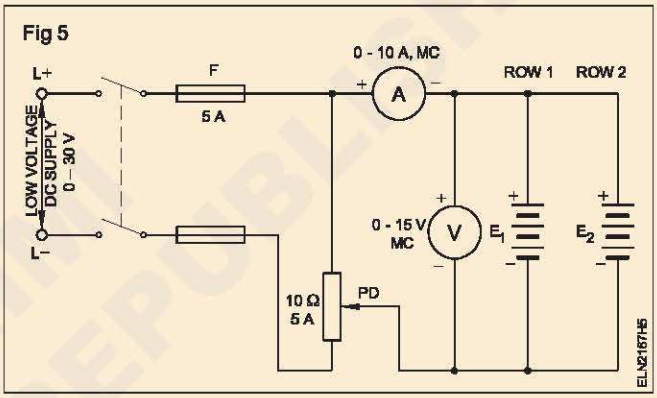

TASK 4 : **Preparation of electrolyte**

1 Prepare the necessary materials for electrolyte preparation.

2 Fill distilled water of the required quantity in the glass jar.

3 Add concentrated sulphuric acid little by little to the water and stir with a glass rod simultaneously.

Don't pour excess acid at a time to the water to avoid excess generation of heat.

4 Allow the mixture to cool sufficiently to the ambient temperature.

5 Read the specific gravity (Fig 1). If the specific gravity is below 1250, add a little more acid to bring to the correct specific gravity.

Take care not to sprinkle the electrolyte.

© NIMI NOT TO BE REPUBLISHED

Practice on routine, care / maintenance and testing of batteries

Objectives: At the end of this exercise you shall be able to
- **prepare and follow the routine care/maintenance schedule chart for batteries**
- **carry out the general procedure and maintenance for batteries.**

Requirements

Tools/ Instruments
- Ring spanner (6 mm - 25 mm) - 1 Set
- Combination pliers 150mm - 1 No.
- Insulated screw driver 200mm - 1 No.
- Hydrometer - 1 No.
- High rate discharger tester - 1 No.

Equipment/Machines
- Lead acid battery 12V / 60 AH - 1 No.

Materials
- Banian cloth - as reqd.
- Distilled water - as reqd.
- Sodium bicarbonate solution - as reqd.

PROCEDURE

TASK 1: **Prepare and follow the routine care/maintenance schedule chart for batteries**

1 Collect the care/maintenance activities required for lead acid batteries.

2 Make a care/maintenance chart for daily, weekly, monthly, six monthly maintenance schedule as in chart - 1.

3 Perform the routine care/maintenance activities of battery by referring the following chart 1.

Routine Care/ Maintenance Schedule Chart-1

Sl.No.	Routine	Activities to be done	Remarks
1	Daily	• Inspect the batteries visually. • If it is found abnormal, report and do necessary action.	
2	Weekly	• Inspect all batteries visually • Clean surface, check tightness of connectors and vent plugs • Check supporting clamps	
3	Monthly	• Check level of electrolyte • Do charging of battery, if not been automatically charged • Clean terminals, reconnect, apply protection jelly. • Clean top surface by sodium bi carbonate solution in water. • Wipe surface for dryness. • Check that other materials surface should not have contact with batteries and top surface of battery	
4	Six Monthly	• Check level and specific gravity, charging rate, charging hours, voltage cell	

(Life of well maintained lead acid battery can be about five to six years)

— — — — — — — —

© NIMI NOT TO BE REPUBLISHED

TASK 2 : **Carry out the general preventive maintenance of lead acid battery**

1 Perform the following steps for the preventive maintenance of battery.

Steps to be followed for preventive maintenance of battery

- Maintain the level of the electrolyte 10 to 15 mm above the plates (or) as per manufacturer's manual.
- Add the distilled water to the acid; and do not add acid to water.
- Connect the positive terminal of the battery to the positive terminal of the supply, and connect the negative terminal of the battery to the negative terminal of the supply while charging the battery.
- Keep the vent plug open for the liberation of gases during charging.
- Clean the vent plugs holes for proper discharging of gas.
- Keep the battery terminals always cleaned.
- Apply a thin layer of Vaseline (or) petroleum jelly over them to prevent corrosion.
- Do not charge or discharge the battery in higher rate continuously.
- Remove the lead sulphate which is formed due to over charge after four months.
- Maintain well-ventilated room for battery charging.
- Use high rate discharge tester only for charged battery not for discharged battery.
- Check the specific gravity of the electrolyte before charging and discharging.

— — — — — — — —

© NIMI NOT TO BE REPUBLISHED

Determine the number of solar cells in series / Parallel for given power requirement

Objectives: At the end of this exercise you shall be able to
- **determine the number of solar cells required for a series group for a given voltage requirement**
- **determine the number of group of solar cells in parallel for a given ampere hour capacity**
- **calculate the total number of solar cells required for a given power requirement**
- **connect the given cells in series and parallel groups to charge the battery.**

Requirements

Tools/Instruments

- Cutting pliers 200 mm - 1 No.
- Screw driver 250 mm - 1 No.
- Connector screw driver 100 mm - 1 No.
- Voltmeter MC type 0 - 15V - 1 No.
- Ammeter 0-500 mA - MC - 1 No.
- Soldering Iron 35W 240V 50 Hz - 1 No.

Materials/Components

- Solar cells 125 mW/cm^2, 0.45 V, 57 mA - 87 cells
- Connecting wires 3/0.91mm PVC insulated cable - 20 m
- Insulation tape 30 cm long - 1 No.
- Miniature bulb B.C Type 3W 12 V with holder - 1 No.
- 'On' and 'Off' flush mounting switch 6A 240 Volts - 2 Nos.
- Resin core solder 60:40 - 2 Nos
- - as reqd.

PROCEDURE

TASK 1 : **Determine the number of cells required for a series group**

A village panchayat office requires a light of 12V 3Watts for display purpose for four hours which has to be energized through a battery. The battery is to be charged through an array of solar cells having 125 mw/cm^2 capacity. The light from sun expected to be available for 8 hours a day. Calculate the number of solar cells in series group and the number of groups in parallel to charge the battery and wire up the solar cells accordingly.

1 Determine the number of solar cells in series group.

$$\text{No. of cells in series group} = \frac{\text{Total required voltage}}{\text{Volt per cell}}$$

Assuming charging voltage is equal to battery voltage + 1 volt = 12 + 1 = 13 V

$$\text{No. of cells in series group} = \frac{13}{0.45} = 29 \text{ cells}$$

Calculate the ampere hour requirement

$$\text{The current required} = \frac{\text{Power}}{\text{Voltage}} = \frac{3\text{watts}}{12\text{volts}} = \frac{1}{4}\text{amps}$$

say 250 mA

The charge taken from the batteries at the rate of 250 mA for 4 hours

$$\text{Hence ampere hour requirement} = \frac{250}{1000} \times 4$$

= 1 AH

$$\text{Charging current rating} = \frac{\text{ampere hour lost in actual usage}}{\text{No. of possible charging hours}}$$

$$= \frac{1\text{AH}}{8} = 0.125 \text{ amperes}$$

$$\text{Total No. of cells in parallel group} = \frac{\text{Output current}}{\text{Cell current}}$$

$$= \frac{0.125\text{ amp}}{57\text{ mA}}$$

$$= \frac{125}{57} = 2.2$$

= say 3 cells/group

Hence total number of cells required = 29 x 3

= 87 cells

— — — — — — — —

TASK 2 : **Connect the given 87 cells in series parallel groups to charge the 12 v battery**

1 Connect 29 cells in a series group and solder the points.

2 Make 3 groups of 29 cell series groups.

3 Connect the three series groups in parallel and solder the connections ends.

4 Connect the series parallel group of cells with a voltmeter, an ammeter, battery and a 6A Switch as shown in the Fig 1.

5 Measure the voltage across the groups with the help of 0-15 V M.C. voltmeter and enter the values in Table 1.

6 Close the switch and measure the charging current and enter the values in Table 1.

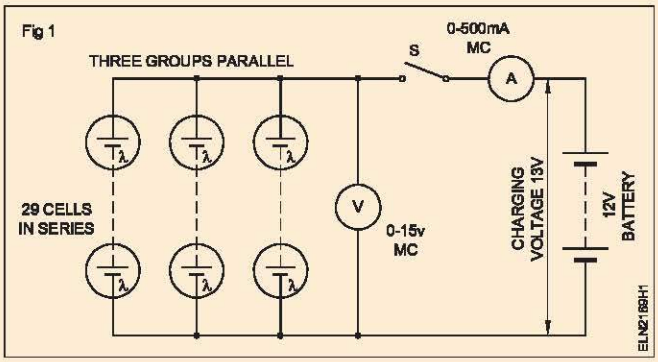

Table 1

Open circuit voltage of coils	Load voltage	Charging current

© NIMI
NOT TO BE REPUBLISHED