Primary cells and secondary cells

Scan the QR Code to view the video for this exercise

Objectives: At the end of this lesson you shall be able to
- **state the chemical effect of electric current**
- **state the Laws of electrolysis**
- **state the basic principles of electroplating**
- **state the principle and construction of primary cells**
- **state the principle and construction of secondary cells (lead acid, nickel iron and nickel cadmium)**
- **compare the primary cells and secondary cells.**

Chemical effects of electric current

'There are some liquids in which a passage of electric current is accompanied by chemical changes.' This effect is known as chemical effect of electric current.

The applications of chemical effect of electric current may be observed in daily life; e.g., nickel or copper plating on metallic articles, production of E.M.F by a cell, etc. If two leads taken from the positive and negative terminals of a battery are immersed in a salted water, then the production of bubbles can be seen at the lead ends; it is all due to chemical effect of electric current.

Electrolysis

The process of chemical changes due to the passage of an electric current through a liquid or a solution is called electrolysis.

Electrolyte

'The liquid or solution which undergoes a chemical change in it on account of the passage of an electric current, is called an electrolyte'; e.g., salted water, acidic or a basic solution etc.

Electrodes (Anode and cathode)

'Two conductor plates are immersed in the liquid to form a passage of current through it, they are known as electrodes'. The electrode through which the current enters the liquid, is called a positive electrode or anode, while the other through which it leaves the liquid (electrolyte) is called a negative electrode or cathode.

Ions

During electrolysis, the molecules of the electrolyte split into their constituents whcih are called ions. When a p.d. is applied across the two electrodes, the positively charged ions (cat ions) move towards the cathode and the negatively charged ions (an ions) move towards the anode. On reaching at any electrode, an ion give up its charge and ceases to be an ion . The process of converting atoms into ions is called **Ionization.**

Electrochemical equivalent: The mass of a substance liberated or deposited during electrolysis by one coulomb of electricity is termed as electrochemical equivalent (ECE) of that substance.

The ECE of silver is 1.1182 milligram/coulomb.

Coulomb: The coulomb (C) is the unit of electric charge (Q) or the quantity of electricity.

The coulomb is the product of current in ampere and time in seconds.

Faraday's Law of Electrolysis

1. First law: The mass of the substance liberated or deposited at any electrode during electrolysis is propotional to the quantity of eletricity passed through the electrolyte. The mass of the substance liberated at any electrode will be more, if more current is passed or a current for more time is passed through the electrolyte. If the mass liberated is m then

$$m \propto I$$

$$m \propto t \quad \text{---(i)}$$

$$m \propto I.t \quad \text{---(ii)}$$

$$m = Z.I.t$$

Where, I = current, amperes

t = time, seconds

m = mass of the substance liberated, grams

Z = constant

Here, the constant Z is known as electro-chemical equivalent (ECE).

2 Second Law - 'When the same quantity of electricity is passed through different electrolytes , then the quantites of elements liberated at the different electrodes are proportional to their electro-chemical equivalents.'

$$\text{Mass} \propto \text{E.C.E}$$

$$M \propto Z$$

Where Z = electro-chemical equivalent

According to Faraday's laws of electrolysis

$$m = Z.I.t$$

Where, m = mass of substance liberated in grams

z = Electro chemical equivalent of the substance in gram

I= Current in amperes

t= Time in seconds

Note. Mass deposited m = Volume x Density

$$\text{Equivalent weight} = \frac{\text{Atomic weight}}{\text{Valency}}$$

$$\text{E.C.E.of nickel} = \frac{\text{Equivalent wt.of nickel}}{\text{Equivalent wt.of silver}} \times \text{E.C.E.of silver}$$

Table for Elecro-Chemical Equivalents of Elements

Name of Element	Atomic Weight	Valency	Electro-Chemical Equivalent mg/c	Chemical equivalent g/c
Hydrogen	1.008	1	0.01045	1.008
Aluminium	27.1	3	0.0936	9.03
Copper	63.57	2	0.3293	31.78
Silver	107.88	1	1.118	107.88
Zinc	65.38	2	0.3387	32.69
Nickel	58.68	2	0.304	29.34
Chromium	52.0	3	0.18	17.33
Iron	55.85	2	0.2894	27.925
Lead	207.21	2	1.0738	103.6
Mercury	200.6	1	2.0791	200.6
Gold	197.0	1	2.0438	197

Note. (mg/c = milli-gram per coulomb)

Application of electrolysis

The principal applications of electrolysis are as follows:

1. Electroplating
2. Electro-refining of metals
3. Electrolytic capacitor
4. Electrotyping
5. Extraction of metals.

Electroplating

The process of depositing a metal on the surface of another metal by electrolysis is known as electroplating. Electroplating is widely used in giving an attractive appearance and finish to all types of products. In this process inferior metals are coated with costly metals (such as silver, nickel, gold, chromium, etc.) to give an attractive shiny appearance and rust-proof surface.

Conditions for electroplating

The following conditions must be fulfilled before electroplating an article.

i The article to be electroplated must have a chemically cleaned surface, i.e. it must not have any sort of dirt, rust and greasy surface.

ii The article to be plated should form a cathode.

iii The anode must be of the metal to be deposited for maintaining the concentration of the solution constantly during electrolysis.

iv The metal to be coated has to be in the solution of an electrolyte.

The electrolyte is contained in a wooden reinforced cement concrete tank which is known as a "vat". The anode as well as the article to be plated are hung through the conducting wires so as to dip in the solution. The value of the current is adjusted according to the metal deposited on the surface area of the article. The time required for electroplating can be calculated if we know the mass of the metal deposited and ECE with the formula

M = ZIt

Therefore, Time $t = \frac{M}{IZ}$

we know M = ZIt ------ (1)

$I = \frac{M}{Zt}$ and $Z = \frac{M}{It}$ mg / Coulomb

We know Volume = Area x Thickness ------(2)

$$\text{Area} = \frac{\text{Volume}}{\text{Thickness}} \text{ and}$$

$$\text{Thickness} = \frac{\text{Volume}}{\text{Area}}$$

Mass = Volume x Density ----- (3)

$$\text{Volume} = \frac{\text{Mass}}{\text{Density}} \text{ cc}$$

$$\text{Density} = \frac{\text{Mass}}{\text{Volume}} \text{ gm /cc}$$

Example1: If 111.83 mg of silver is deposited on the cathode in 3 min 20 s, by a DC current of 0.5A, calculate the ECE of silver.

Solution:

t = 3 min 20 s = 200 s

M = 111.83 mg

From Faraday's law,

M = ZIt

$$Z = \frac{M}{It} = \frac{111.83}{0.5 \times 200}$$

= 1.1183 mg/ C

Current required for plating

Low pressure direct current (DC) supply is always used for electroplating purposes. The pressure used varies from 1 to 16 V depending upon the rate of plating and the nature of the electrolyte.

© NIMI NOT TO BE REPUBLISHED

Cathodic protection in Eletroplating

Cathodic protection (CP) is a technique used to control the corrossion of a metal surface by making it as the cathode of an electrochemical cell. A simple method of protection connects the metal to be protected to a more easily corroded sacrifical metal to act as the anode.

The sacrificial metal then corrodes instead of the protected metal. For the structures such as long pipe lines where passive galvanic cathodic protection is not adequate an external DC electrical power source is used to provide sufficicent current.

The CP system protects a wide range of metallic structures steel water, fuel pipe line, storage tanks water heaters, steel wire pipes, oil platform, oil well casing, wind farms etc. Another common application is in galvanised steel in which a sacrificial coating of zinc on steel parts protects them from rust. CP protection can in some cases prevents the stress corrossion cracking.

Type of cells

Cell: A cell is an electrochemical device consisting of two electrodes made of different materials and an electrolyte. The chemical reaction between the electrodes and the electrolyte produces a voltage.

Cells are classified as

- dry cells
- wet cells.

A dry cell is one that has a paste or gel electrolyte. With newer designs and manufacturing techniques, it is possible to completely (hermetically) seal a cell. With complete seals and chemical control of gas build-up, it is possible to use liquid electrolytes in dry cells. Today the term `dry cell' refers to a cell that can be operated in any position without electrolyte leakage.

Wet cells are cells that must be operated in an upright position. These cells have vents to allow the gases generated during charge or discharge to escape. The most common wet cell is the lead-acid cell.

Cells are further classified as primary and secondary cells.

Primary cells: Primary cells are those cells that are not rechargeable. That is, the chemical reaction that occurs during discharge is not reversed. The chemicals used in the reactions are all converted when the cell is fully discharged. It must then be replaced by a new cell.

Types of primary cells:

- Voltaic cell
- Carbon-zinc cell (Leclanche cell and Dry cell)
- Alkaline cell
- Mercury cell
- Silver oxide cell
- Lithium cell

Dry cell (Carbon-Zinc cell): The danger of spilling the liquid electrolyte from a Leclanche type of cell led to the invention of another class of cells called dry cells.

The most common and least expensive type of a dry cell is the carbon-zinc type (Fig 1). This cell consists of a zinc container which acts as the negative electrode. In the centre is a carbon rod which is the positive electrode. The electrolyte takes the form of a moist paste made up of a solution containing ammonium chloride.

Fig 1

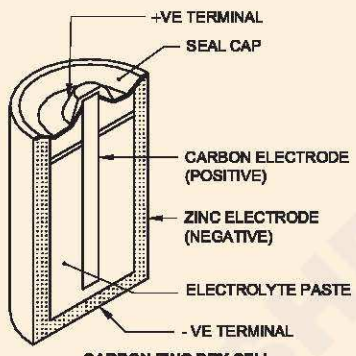

CARBON-ZINC DRY CELL

As with all primary cells, one of the electrodes becomes decomposed as part of the chemical reaction. In this cell the negative zinc container electrode is the one that is used up. As a result, cells left in equipment for long periods of time can rupture, spilling the electrolyte and causing damage to the neighbouring parts.

Carbon-zinc cells are produced in a range of common standard sizes. These include 1.5 V AA, C and D cells. (AA Pen type cell, `C' medium size and 'D' large/economy size).

Uses: Primary cells are used in electronic products ranging from watches, smoke alarms, cardiac pacemakers, torches, hearing aids, transistor radios etc.

Internal resistance: The output voltage from a cell varies as the load on the cell changes. Load on a cell refers to the amount of current drawn from the cell. As the load increases, the voltage output drops. The change in output voltage is caused by the internal resistance of the cell. Since materials from which the cell is made are not perfect conductors, they have resistance. Current flowing through the external circuit also flows through the internal resistance of the cell.

Defects of a simple cell: With a simple voltaic cell, the strength of current gradually diminishes after some time. This defect is mainly due to two causes.

- Local action
- Polarisation

Local action: In a simple voltaic cell, bubbles of hydrogen are seen to evolve from the zinc plate even on open circuit. This effect is termed local action. This is due to the presence of impurities like carbon, iron, lead, etc. in the commercial zinc. This forms small local cells on the zinc plate and reduces the strength of current of the cell.

The local action is prevented by amalgamating the zinc plate with mercury. To do so, the zinc plate is immersed in dilute sulphuric acid for a short time, and afterwards, mercury is rubbed over its surface.

Polarisation: As current flows, bubbles of H_2 evolve at the copper plate on which they gradually form a thin layer. Due to this the current strength falls and finally stops altogether. This effect is called the polarization of the cell.

Polarisation can be prevented by using some chemicals which will oxidize the hydrogen to water before it can accumulate on the plate. The chemicals used to remove polarisation are called de-polarisers.

Secondary cell: A cell that can be recharged by sending electric current in the reverse direction to that of a discharge mode is known as a secondary cell.

The secondary cell is also called a storage cell since after it is charged it stores the energy until it is used up or discharged.

Types of secondary cells

– Lead acid cell

– Alkaline cell or nickel-iron cell

Parts of Lead acid cell (Fig 2)

Fig 2

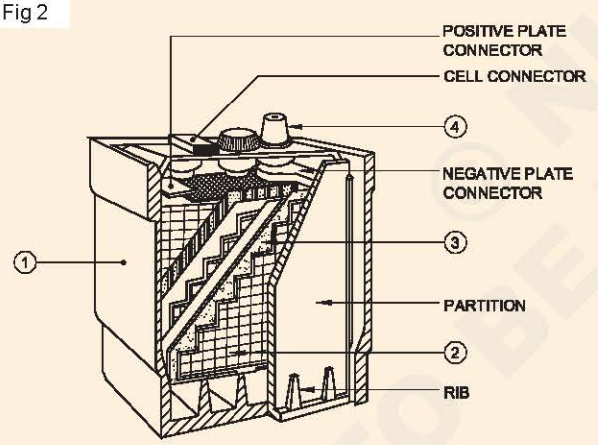

PARTS OF LEAD ACID CELL

1 Container

2 Plates

3 Separators

4 Post terminals

Container: The container is made of hard rubber, glass or celluloid to accommodate the active plates, separators and the electrolyte. The plates rest on ribs provided at the bottom of the container and the space between ribs is known as sediment chamber.

Plates: Positive plates are of two types.

– Plante plate or formed plates

– Faure plate

Plante plates: These are prepared by the process of repeated charging and discharging. They are made of pure lead at the beginning which changes to lead peroxide after charge.

Faure plate: Pasted or Faure plates are made of rectangular lead grid into which the active material i.e. lead peroxide ($Pb\ O_2$) is filled in the form of a paste (Fig 3).

Fig 3

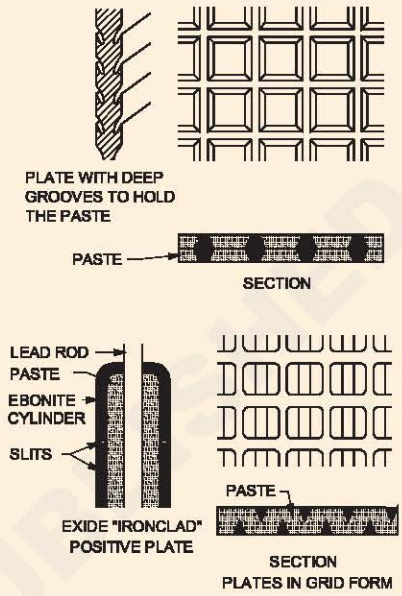

CONSTRUCTION OF PASTED-TYPE ACCUMULATOR PLATES

Negative plates are made of rectangular lead grid, and the active material is spongy lead (Pb) which is in the form of a paste (Fig 4).

Fig 4

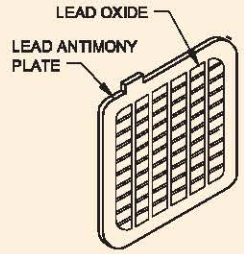

SINGLE LEAD PLATE

Separators: These are made of thin sheets of chemically treated porous wood or rubber. They are used to avoid short in between the positive and negative plates (Fig 5).

Post terminal: A small pole extended upward from each group of welded plates from the plate connecter (Fig 6) forms the post terminal.

Electrolyte: The electrolyte used in a lead acid cell is dilute sulphuric acid (H_2SO_4). The specific gravity of the electrolyte is 1.24 to 1.28. It varies according to the manufacturer's specification.

Working principle

The secondary cell has no significant electrochemical energy at the start. The energy must first be charged into secondary cell. Then the cell retains the stored energy until

Fig 5

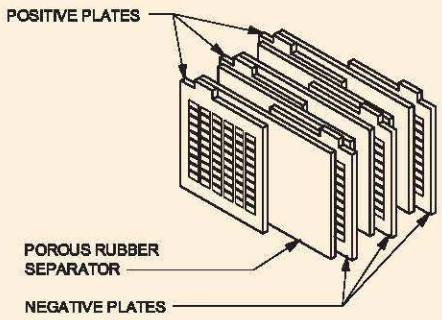

ARRANGEMENT OF PLATES AND SEPARATORS

Fig 6

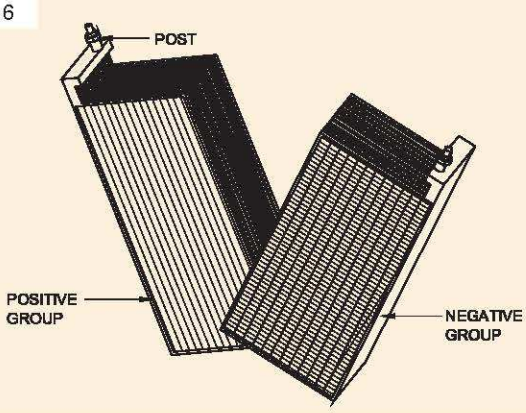

it is used up. That is, both cell electrodes are basically lead sulphate($PbSO_4$). When the cell is charged, due to chemical reaction taking place in it, the lead sulphate eletctrode change to soft or sponge lead, (Pb - negative plate) and the other electrode changes to lead peroxided(PbO_2 - positive plate).

At the same time the electrolyte solution is strengthened and becomes strong sulphuric acid (H_2SO_4) (Fig 7).

Fig 7

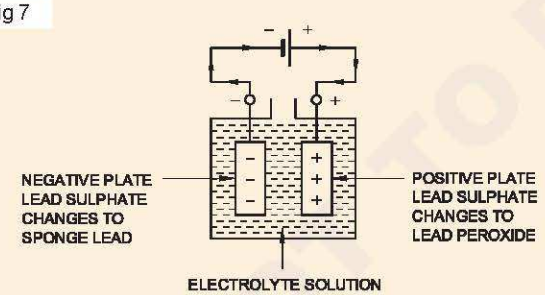

DURING CHARGING PROCESS

Voltage of a fully charged cell is 2.1 to 2.6V and the voltage falls to 1.8V after discharge.

Capacity: The unit of capacity of a storage cell is ampere-hour (AH). It is the product of the rated current of a cell/battery in amperes and the time in hours at which it can discharge that rated current,

Capacity = Current x Time - AH

Temperature and specific gravity: The temperature of the electrolyte must be kept at 27°C and the specific gravity at 1.250 ± 0.010.

Excess temperature will cause more sulphation and buckling of the positive plate.

Defects

- Hard sulphation
- Buckling
- Partial short

Hard sulphation: Over discharging or the cell being left in a discharged condition for a long time cause sulphation on both electrodes and offers high internal resistance. The sulphation (hard) can be removed by recharging the cell for a longer period at a low rate called a trickle charge.

Buckling: The bending of electrodes due to overcharging and discharging, improper electrolyte and temperature is known as buckling.

Partial short: The sediments falling from the plates (electrodes) short- circuiting the positive and negative electrodes cause overheating of the particular cell during both charging and discharging periods. Such a cell may be replaced with a new one.

Efficiency: It is considered in two ways.

- Ampere-hour (AH) efficiency
- Watt-hour (WH) efficiency

$$\text{AH efficiency} = \frac{\text{Output in AH discharge}}{\text{Input in AH charge}}$$

The watt-hour efficiency is always less than the ampere-hour efficiency because the potential difference during discharge is less than that during charge.

$$\text{Watt - hour efficiency} = \frac{\text{AH efficiency} \times \text{Average volts on discharge}}{\text{Average volts on charge}}$$

NOT TO BE REPUBLISHED ©

The chemical action which takes place in the cell during charge and discharge cycle is given below for your reference.

During discharge

positive plate

Lead peroxide	+	Hydrogen	+	Sulphuric Acid	→	Lead sulphate	+	water
PbO_2	+	H_2	+	H_2SO_4	→	$PbSO_4$	+	$2H_2O$

Negative plate

Pure lead	+	Sulphate	=	Lead sulphate
Pb	+	SO_4	=	$PbSO_4$

During charge

positive plate

Lead sulphate	+	Sulphate	+	Water	→	Lead peroxide	+	Sulphuric acid
$PbSO_4$	+	SO_4	+	$2H_2O$	→	PbO_2	+	$2H_2SO_4$

Negative plate

Lead sulphate	+	Hydrogen	→	Lead	+	Sulphuric acid
$PbSO_4$	+	H_2	→	Pb	+	H_2SO_4

The nickel iron cell (Fig 8)

Fig 8

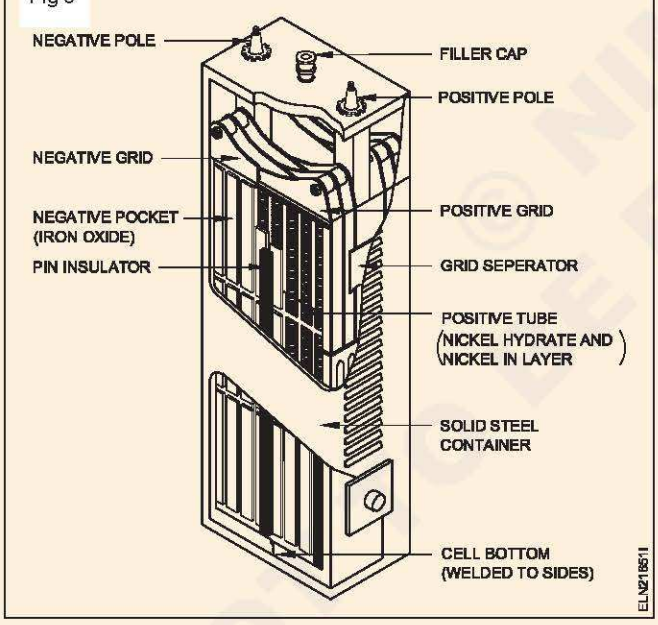

Parts

- Positive plate
- Negative plate
- Electrolyte
- Container
- Separators

The positive plate is made of Nickel hydroxide($Ni(OH)_4$) tubes and perforated steel ribbon wound spirally and held together by steel ribs, and the whole lot is nickel-plated.

The negative plate is made of a nickel steel strip with fine perforation.The electrolyte is 21% solution of potassium hydroxide (KOH) along with some quantity of lithium hydrate(LiOH).

The container is made of nickel-plated steel. The separators are made of hard rubber strips and held in the nickel-plated container.

Chemical changes: On discharge, potassium hydroxide (KOH) splits up into K and (OH)ions. i.e. into potassium and hydroxide ions. OH ions travel towards the negative and oxidise the iron. K ions go to the anode and reduce Ni $(OH)_1$ to Ni $(OH)_2$. During charging, the opposite reactions take place. The chemical changes during charging and discharging can be represented by a reversible equation.

It is seen from the equation that the electrolyte acts merely as a source for transfer of OH ions from one plate to another. It does not take part in any chemical change. As a result the density does not change to the same extent as in an ordinary lead acid cell. Thus, the density of the electrolyte remains almost the same during the action.

Charactereristics: The emf of the cell when fully charged is 1.4V, and it reaches to 1.2 on discharge. If the voltage falls below 1.15, the cell is fullly discharged.

- The mechanical strength of plates is good since they are made of steel.
- The cell can withstand heavy charge and discharge currents, and does not deteriorate even if left discharged.
- It is superior to a lead acid cell in mechanical strength, durability and robustness.

Moreover, as compared to lead-acid cells, the alkaline cells operate much better at low temperatures, do not emit obnoxious fumes, have very small self-discharge and their plates do not buckle or smell.

Chemical action

$$Ni(OH)_4 + KOH + Fe \rightleftharpoons Ni(OH)_2 + KOH + Fe(OH)_2$$

Hydrated Ferrous — Potassium — Ferrous — Nickel

Comparison : Lead-acid cell and Edison cell

Sl.No.	Particulars	Lead-acid cell	Nickel iron cell
1	Positive plate	PbO, lead peroxide	Nickel hydroxide $Ni(OH)_4$ or Nickel oxide (NiO_2)
2	Negative plate	Sponge lead	Iron
3	Electrolyte	Diluted H_2SO_4	KOH
4	Average emf	2.1 V/cell	1.2 V/cell
5	Internal resistance	Comparatively low	Comparatively higher resistance
6	Efficiency: Amp-hour Watt-hour	 90 - 95% 72 - 80%	 Nearly 80% About 60%
7	Cost	Comparatively less than alkaline cell	Almost twice that of Pb-acid cell (Easy maintenance)
8	Life	Gives nearly 1250 charges and discharges	Five years atleast
9	Strength	Needs much care and maintenance. Sulphation occurs often due to incomplete charge or discharge.	Robust, mechanically strong, can withstand vibration, light, unlimited rates of charge and discharge. Can be left discharged, free from corrosive liquids and fumes.

Advantages and disadvantages of nickel iron cell

A Advantages

i It can withstand heavy charge and discharge current and does not deteriorate.

ii It is robust in construction and thus it can be used even roughly.

iii It is light in weight and thus it is portable.

iv It can be left discharged for a long time.

v It can work on higher temperatures also.

vi It is used on higher temperatures also.

vii It is used in electric operated vehicles, switch-gear operations etc.

B Disadvantages

i Its EMF does not remain constant.

ii Its efficiency is lower than lead-acid cell.

iii It has a high internal resistance.

iv Its EMF is low in comparison to lead acid cell.

v If temperature is increased, its EMF will slightly reduce.

Grouping of cells

Scan the QR Code to view the video for this exercise

Objectives: At the end of this lesson you shall be able to
- **state the purpose of cells connected in series and parallel**
- **explain series connections, parallel connection and series-parallel connection of cells.**

Grouping of cells: Often an electric circuit requires a voltage or current that a single cell is not capable of supplying alone. In this case it is necessary to connect groups of cells in various series and parallel arrangements.

Series connections: Cells are connected in series by connecting the positive terminal of one cell to the negative terminal of the next cell (Fig 1).

Fig 1

Identical cells are connected in series to obtain a higher voltage than is available from a single cell. With this connection of cells, the output voltage is equal to the sum of the voltages of all the cells. However, the ampere hour (AH) rating remains equal to that of a single cell.

Example: Suppose three `D' flashlight cells are connected in series (Fig 2). Each cell has a rating of 1.5 V and 2 AH The voltage and ampere hour rating of this battery would be:

Fig 2

V Battery = V per cell x No .of cells

= (1.5V) (3)

= 4.5 V

AH Battery rating = AH rating of 1 cell

= 2 AH

Parallel connection: Cells are connected in parallel by connecting all the positive terminals together and all the negative terminals together (Fig 3).

Identical cells are connected in parallel to obtain a higher output current or ampere-hour rating. With this connection of cells, the output ampere hour rating is equal to the sum of the ampere hour ratings of all the cells. However, the output voltage remains the same as the voltage of a single cell.

Fig 3

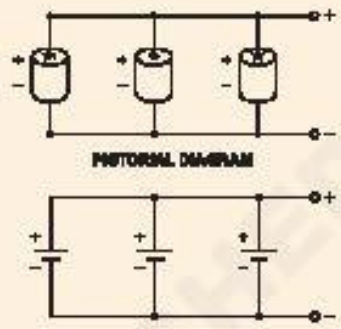

Assignment: Suppose four cells are connected in parallel (Fig 4). Each cell has a rating of 1.5 V and 8 AH. The voltage and ampere-hour rating of this battery would be:

Fig 4

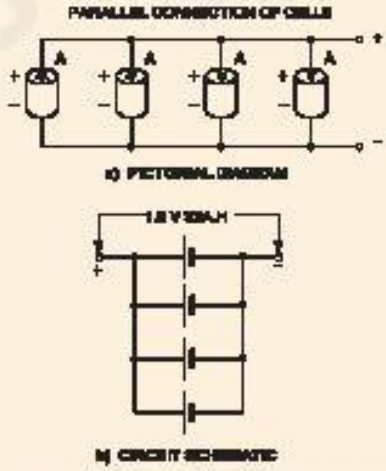

Series-parallel connection: Sometimes the requirements of a piece of equipment exceed both voltage and ampere hour rating of a single cell. In this case a series-parallel grouping of cells must be used (Fig 5).

The number of cells that must be connected in series to have voltage rating is calculated first and then the number of parallel rows of series connected cells is calculated for required ampere-hour rating.

Fig 5

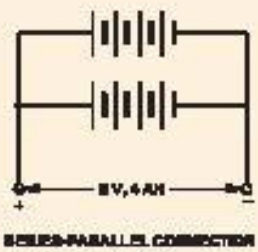

Battery charging method - Battery charger

Objectives: At the end of this lesson you shall be able to
- **state the necessity of charging a battery**
- **describe the preparation of electolyte**
- **describe the use of a hydrometer and high rate discharge tester**
- **state the precautions to be followed while charging and discharging a battery**
- **describe the different types of charging methods of secondary cells**
- **explain the purpose, construction and working principle of battery charger.**

Scan the QR Code to view the video for this exercise

Necessity of charging: During discharge, due to chemical reaction, the active electrodes become smaller and the internal resistance becomes high causing a low output. To reverse the action, send a current (DC) through the battery or cell in the opposite direction to that of the discharge. This process is called charging. The charging can be done through a battery charger.

Battery chargers: When the chemical reaction in a rechargeable battery has ended, the battery is said to be discharged and can no longer produce the rated flow of electric current. This battery can be recharged, however, by passing direct current from an outside source to flow through it in a direction opposite to that in which it flowed out of the battery.

When charging a battery, the negative lead of the charger must connect to the negative lead of the battery and the positive lead of the charger to the positive lead of the battery

A simple variable-voltage DC power supply works well as a battery charger.

Charging current: When charging any battery, it is important to set the charging current to a value recommended by the manufacturer. This current is set by adjustment of the output voltage on the charger and read by an ammeter connected in series with the charger and battery (Fig 1). When the battery and charger are at the same voltage, no current flows. The charger voltage is set to a value higher than that of the battery to produce a current flow.

Fig 1

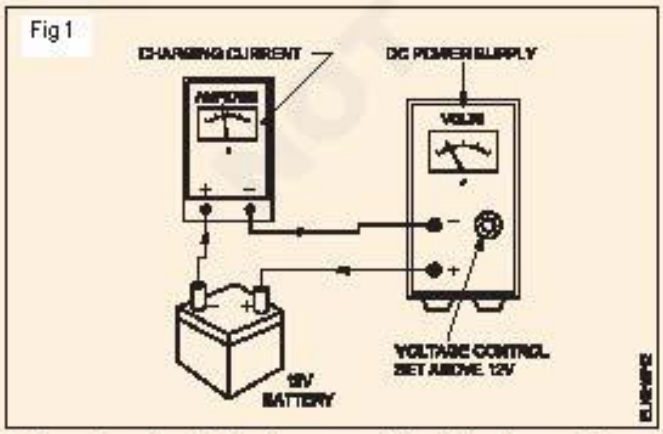

Before charging the battery or cell the following points are to be observed to ascertain the condition of the battery.

1 Specific gravity of the electrolyte

2 Voltage of each cell of the battery

3 Ampere hour capacity of each cell.

Electrolyte

The electrolyte used in a cell is dilute sulphuric acid having a specific gravity between 1.21 and 1.3.

Specific gravity

The ratio of the mass of a given volume of liquid to the mass of the same volume of the water at 4 °C, is known as specific gravity of the liquid.

$$\text{Specific gravity} = \frac{(\text{mass of given volume of liquid})}{(\text{Mass of the same volume of water at } 4^\circ\text{C})}$$

Instrument for testing the condition of cells:

Hydrometer : The specific gravity of an electrolyte is measured with a hydrometer (Fig 2).

Fig 2

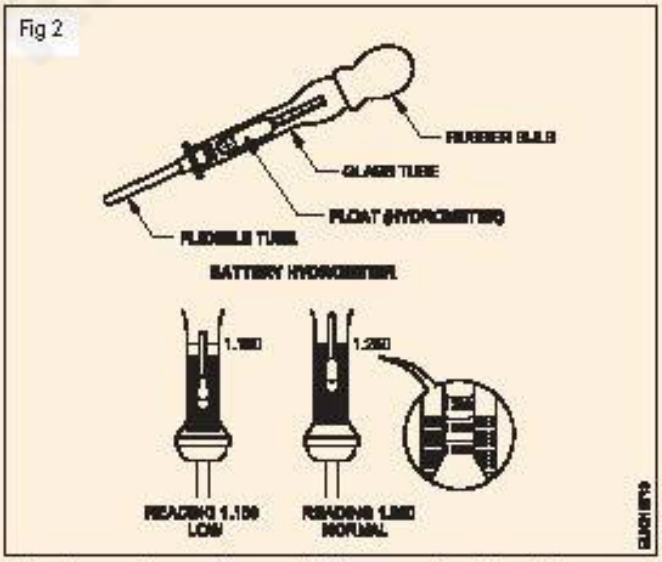

The charged condition of battery can be tested by means of a battery hydrometer. This instrument measures the relative density of the battery electrolyte. Since the strength of the electrolyte varies directly with the state of charge of each cell, you need only to find what specific gravity of sulphuric acid remains in each cell electrolyte to determine how much energy is available.

Cell condition	Hydrometer reading
Full charge	1.26
50% charge	1.20
Discharged	1.15

Voltage tests of lead-acid batteries, like primary cells, should be conducted under load. To make a simple light load voltage test of a car battery, check the value of the battery output voltage with and without the headlights on. A maximum load voltage test can be made by metering the battery voltage while operating the starting motor (Fig 3). In the case of a 12V battery, a drop of battery output voltage below 7V indicates the battery is defective or not fully charged.

Fig 3

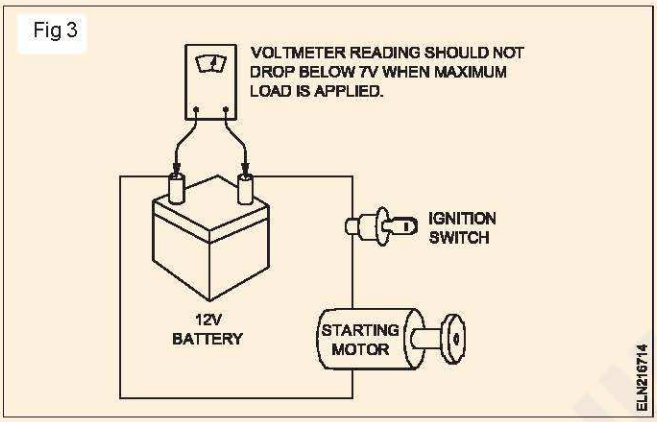

High rate discharge tester: The internal condition of the cell is determined by this test. A low range (0-3V) voltmeter is shunted by a low resistance (Fig 4). The two terminal prods are pressed on to the terminals of a cell for testing. A fully charged cell which is in good condition reads in the range of full charge.

Fig 4

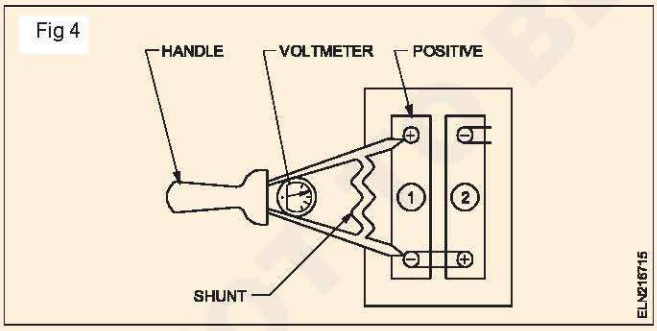

The meter is having three colours red, yellow and green - red for fully discharged, yellow for half charge, green for fully charged condition of the cell respectively.

The methods of charging the secondary cells are:

- constant current method
- constant potential method
- rectifier method.

Constant current method: This method is used where the supply is high voltage DC 220 V, 110 V, etc. but the battery is of low voltage 6 V, 12 V, etc. The emf of the battery is small in comparison to the supply voltage so a lamp-load or a variable resistor is connected in series with the battery (Fig 5). This causes a loss of energy, so, the method is inefficient.

Fig 5

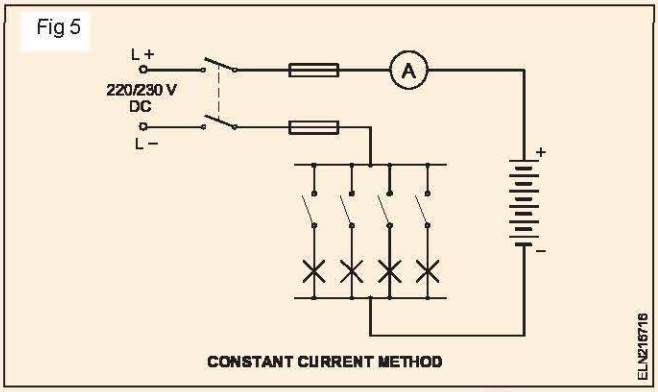

Use: For charging more number of cells at constant current rating.

Constant potential method: In this method, the voltage is maintained at a fixed value about 2.3 V per cell; the current decreases as the charging proceeds. A variable resistor is connected in series, so a voltage source of 2.5 to 2.6 V per cell is required. For a 12 V motor car battery, the charging dynamo is of about 15 V. In comparison to the constant current method less power is wasted for charging and less time is taken. Fig 6 shows the connections for a constant potential method of charging batteries.

Fig 6

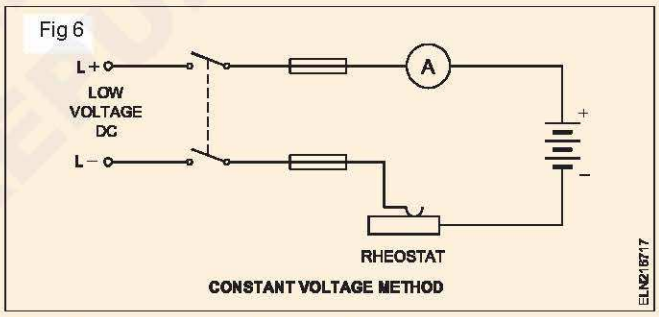

Use: For charging batteries of constant voltage rating.

Rectifier method: A rectifier for battery charging is generally made of diodes connected in the form of a bridge (Fig 7). A transformer is used to step down the AC voltage to that suitable for diodes. Ammeter, voltmeter, switches and fuses are also used in the rectifier set.

Fig 7

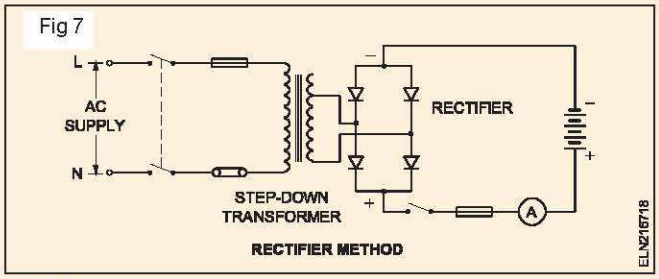

Trickle charge: When the battery is charged at a very low rate, that is 2 to 3% of the normal rate for a long period, it is said to be a trickle charge.

Use: For central or sub-station batteries and for emergency *lighting systems.*

Care and maintenance of batteries

Scan the QR Code to view the video for this exercise

Objectives: At the end of this lesson you shall be able to
- **state the guidelines for care and maintenance of batteries and installation**
- **state the precaution to be followed while charging and discharging of battery.**

Guidlines for installation of batteries

The following guide lines to be followed during installation of batteries at residential building

- Location of battery installed should be free from heat sources and flame.
- Battery connection cables should be as short as possible to prevent excessive voltage drop.
- Before connecting the battery the positive and negative poles must be carefully checked to ensure correct installation.
- Authorised and trained person must only be allowed for installation.
- If the batteries to be installed in the accessories like remote controls first open the battery cover, insert the batteries correctly into +ve and -ve ends then close the battery cover and press it to close.
- Do not expose the batteries to heat (or) flame.
- Manufacturer's instruction must be followed when installing the batteries.
- Follow the local, state and National electricity code.
- When installing a battery bank always be careful, since shock hazard may be present.

Care and maintenance of batteries : The lead acid batteries must be operated under the right conditions if they are to function properly. Regular maintenance is necessary in order to maintain proper conditions and thus prolong the life of the battery.

The battery should not be discharged beyond the minimum value of voltage say, 1.75 V for 2V battery.

The battery should not be kept under a discharged condition for a long time.

The level of the electrolyte should always be kept to a minimum of 10 to 15 mm above the plates by adding distilled water only.

The battery should never be charged and discharged at a higher rate which weakens the plate structure. It should be done as per the manufacturer's instructions.

The battery should be recharged as early as possible after discharge.

A discharged battery should never be tested with a high rate discharge tester.

The high rate discharge tester should be used only on charged batteries and for less than ten seconds.

The specific gravity of the electrolyte should be checked regularly before and after a battery is put on charge.

The battery charging room should always be well ventilated for the gases to escape freely.

The battery terminals must be free from corrosion. The terminals must always be kept clean and petroleum jelly should be applied on them.

The spilling of the electrolyte over the battery causes corrosion and it should be cleaned with soda water or ammonia water.

If the battery has not been used for a long period then the battery should be put on a trickle charge.

The vent plugs should be kept open while charging, for free liberation of gases.

Avoid overcharging and discharging at a high rate. This causes the plates to bend from their position and buckle.

Precautions : Make sure the cell temperature during charge does not exceed the limit specified (43°C) as per the manufacturer's instruction.

A fully charged battery stored at 100°F (38°C) will loose almost all its charge in 90 days. The same battery stored at 60°F (15°C) will loose a little of its charge in the same period of 90 days. High temperature decreases the charging rate and shortens the life.

The rate of charging at the end of the period called finish rate is most important. It must not exceed the value recommended by the manufacturer.

During recharging, the lead acid battery produces flammable gases. An accidental spark can ignite these gases, causing an explosion inside the battery. Such an explosion can break the battery case and throw acid on the people and equipment in the area.

Do not top up the cell with improper water such as tap water, well water, mineral water or acids which will cause hard sulphation and increase the internal resistance.

Avoid improper cleaning agents for terminal posts and metal parts of the battery like emery or sandpaper. Use only the recommended cleaning agents such as baking soda water (warm), ammonia water, and wipe with cotton cloth or with an old brush.

Always wear safety glasses when working with lead acid cells and batteries. If acid does come in contact with clothing or with the skin, immediately flush with clean water. Then wash with soap and water except for eyes. Wash your hands in soap and water after handling batteries.

Solar cells

Objectives: At the end of this lesson you shall be able to
- **state the necessity of tapping natural resources for energy**
- **state about the solar cell /photo voltaic cell**
- **explain the basic principle, construction and characteristics of the solar cell.**

Heat energy

Heat energy is the most sought energy for human being to cook the food as well as to keep warm in cold climate. However the use of wood as the fuel for fire, has ended up in deforestation and resulted in drought.

Search of fuel led the man to use coal and then oil. However these commodities are fast dwindling and after few hundred years both may completely vanish from earth. As such it is essential that human race should find alternative source of energy from nature.

Hence the use of natural resources like heat from sun thought by several scientists and one of the solutions to the energy crisis is the invention of solar cells.

Solar cell / Photovoltaic cell

A solar cell, or photovoltaic cell, is an electrical device that converts the energy of light directly into electricity by the photovoltaic effect, which is a physical and chemical phenomenon. It is a form of photoelectric cell, defined as a device whose electrical characteristics, such as current, voltage, or resistance, vary when exposed to light. Solar cells are the building blocks of photovoltaic modules, otherwise known as solar panels.

Solar cells are described as being photovoltaic irrespective of whether the source is sunlight or an artificial light. They are used as a photo-detector (for example infrared detectors), detecting light or other electromagnetic radiation near the visible range, or measuring light intensity.

The operation of a photovoltaic (PV) cell requires 3 basic attributes:

- The absorption of light, generating electron-hole pairs extraction.
- The separation of charge carriers of opposite types.
- The separate extraction of those carriers to an external circuit.

The solar cells is essentially a large photo diode designed to operate as photo voltaic device and to give as much output power as possible. When these cells are under the influence of light rays from sun, they give out about 100 mw/cm^2 power.

Fig 1 shows the construction, symbol and cross section of a typical power solar cell. The top surface consist of a extremely thin layer of P-type material through which light can penetrate to the junction.

Fig 1

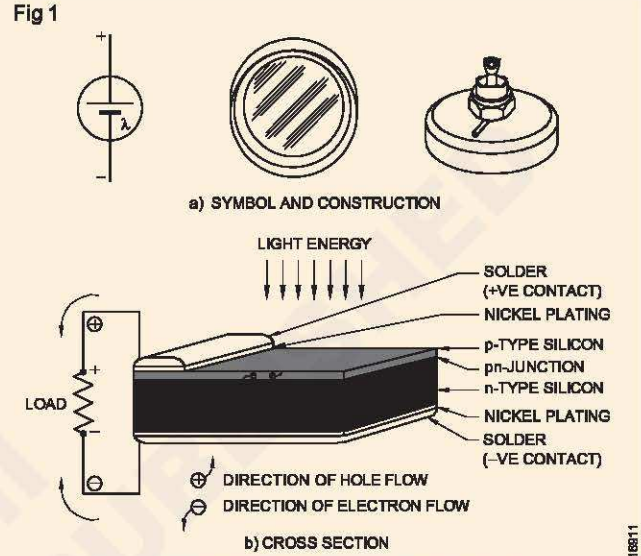

CONSTRUCTION AND CROSS SECTION OF A SOLAR CELL

The nickel plated ring around the P-type material is the positive output terminal, and the bottom plating is the negative output terminal. Commercially produced solar cells will be available in flat strip form for efficient coverage of available surface areas.

According to different manufacturing standards, the output power varies from 50mw/cm^2 to 125mw/cm^2. The graph shows the characteristic of a solar cell which gives 100mw/cm^2. Considering the characteristic curve it is apparent that the cell will deliver an output current of 50mA when the output terminals are short circuited then the output voltage will be zero.

On the other hand open circuited voltage of the cell will be 0.55mv but the output current is zero. Therefore again the output power is zero. For maximum output power the device must be operated at the knee of the characteristic. In solar cells the output power decreases at high temperature.

Several cells must be connected in series to produce the required output voltage, and number of parallel groups to be provided as per the required output current.