Project Name	219-The Address Hotel & Service Appartments
Company / Customer	NPMANJV
Owner / End User	DIRIYAH COMPANY
PMC / Consultant	MIRAGE / HCO
Item Name	ESMDB-H1-B1-01 400/230V, 3Ph+N+E, 60Hz
Item No.	10
Quantity	01
Date	29-07-2026
Created by	SIDRA

Number of pages 56

The technical information contained in this document is the exclusive property of UTEC and can not be used or disclosed to third parties of any kind without its written consent.

Rev. No.	Date	Name	Rev. Description
03	29-07-2026	STM	AS PER COMMENTS
02	18-06-2026	STM	A/P ETAP R-E. SLD & COMMENTS
01	19-04-2026	STM	AS PER UPD. SLD & COMMENTS
00	25-03-2026	STM	AS PER SLD

Checked: Ahmed Abukater
Approved: Mohammad Nadeem
Date: 29-07-2026

Customer Name: NPMANJV
Project Name: 219-The Address Hotel & Service Appartments
Item Name: ESMDB-H1-B1-01 400/230V, 3Ph+N+E, 60Hz
Page Title: Title Page

DWG. No. U25-2006-Q8479
Ref. No. Q8476
Job No. 3530105760
SAP Line 100
S/N 26-5760-0100-01

Item No. 10
QTY 01

Rev. No. 03
Page No. 1
Total Pages 56

TABLE OF CONTENTS

PAGE	PAGE DESCRIPTION
1	Title Page
2	Table of Content
3	Table of Content
4	Table of Content
5	Legend
6	General Characteristics
7	Panel Layout
8	Panel Layout
9	Panel Layout
10	Name Plate Details
11	Client's SLD
12	Schematic Diagram (Incoming)
13	Schematic Diagram (Incoming)
14	Schematic Diagram (Incoming)
15	Schematic Diagram (Outgoing)
16	Schematic Diagram (Outgoing)
17	Schematic Diagram (Outgoing)
18	Schematic Diagram (Outgoing)
19	Schematic Diagram (Outgoing)
20	Schematic Diagram (Outgoing)
21	Schematic Diagram (VFD Starter)

The technical information contained in this document is the exclusive property of UTEC and can not be used or disclosed to third parties of any kind without its written consent.

Rev. No.	Date	Name	Rev. Description
03	29-07-2026	STM	AS PER COMMENTS
02	18-06-2026	STM	A/P ETAP R-E. SLD & COMMENTS
01	19-04-2026	STM	AS PER UPD. SLD & COMMENTS
00	25-03-2026	STM	AS PER SLD

Checked: Ahmed Abukater
Approved: Mohammad Nadeem
Date: 29-07-2026

Customer Name: NPMANJV
Project Name: 219-The Address Hotel & Service Appartments

Item Name: ESMDB-H1-B1-01
400/230V, 3Ph+N+E, 60Hz
Page Title: Table of Content

DWG. No. U25-2006-Q8479
Ref. No. Q8476
Job No. 3530105760
SAP Line 100
S/N 26-5760-0100-01

Item No. 10
QTY 01

=
+
Rev. No. 03
Page No. 2
Total Pages 56

TABLE OF CONTENTS

PAGE	PAGE DESCRIPTION
22	Schematic Diagram (VFD Starter)
23	Schematic Diagram (VFD Starter)
24	Schematic Diagram (VFD Starter)
25	Schematic Diagram (VFD Starter)
26	Schematic Diagram (VFD Starter)
27	Schematic Diagram (VFD Starter)
28	Schematic Diagram (VFD Starter)
29	Schematic Diagram (VFD Starter)
30	Schematic Diagram (Outgoing)
31	Schematic Diagram (DOL Starter)
32	Schematic Diagram (DOL Starter)
33	Schematic Diagram (DOL Starter)
34	Schematic Diagram (Control)
35	Schematic Diagram (Control)
36	Schematic Diagram (Control)
37	Schematic Diagram (Door Limit Switch)
38	Schematic Diagram (Heater)
39	Schematic Diagram (BMS Signals)
40	Terminal diagram
41	Terminal diagram
42	Terminal diagram

The technical information contained in this document is the exclusive property of UTEC and can not be used or disclosed to third parties of any kind without its written consent.

Rev. No.	Date	Name	Rev. Description
03	29-07-2026	STM	AS PER COMMENTS
02	18-06-2026	STM	A/P ETAP R-E. SLD & COMMENTS
01	19-04-2026	STM	AS PER UPD. SLD & COMMENTS
00	25-03-2026	STM	AS PER SLD

Checked: Ahmed Abukater
Approved: Mohammad Nadeem
Date: 29-07-2026

Customer Name: NPMANJV
Project Name: 219-The Address Hotel & Service Appartments
Item Name: ESMDB-H1-B1-01 400/230V, 3Ph+N+E, 60Hz
Page Title: Table of Content

DWG. No. U25-2006-Q8479
Ref. No. Q8476
Job No. 3530105760
SAP Line 100
S/N 26-5760-0100-01

Item No. 10
QTY 01

=
+
Rev. No. 03
Page No. 3
Total Pages 56

TABLE OF CONTENTS

PAGE	PAGE DESCRIPTION
43	Terminal diagram
44	Terminal diagram
45	Terminal diagram
46	Terminal diagram
47	Terminal diagram
48	Terminal diagram
49	Terminal diagram
50	Terminal diagram
51	Terminal diagram
52	Terminal diagram
53	Terminal diagram
54	Material List
55	Material List
56	Material List

The technical information contained in this document is the exclusive property of UTEC and can not be used or disclosed to third parties of any kind without its written consent.

LEGEND

SYMBOL	DESCRIPTION	SYMBOL	DESCRIPTION	SYMBOL	DESCRIPTION	SYMBOL	DESCRIPTION	SYMBOL	DESCRIPTION
	FIXED CIRCUIT BREAKER I PROTECTION		CONTACTOR POWER CONTACT		PUSH BUTTON		HYGROSTAT		SOCKET
	FIXED CIRCUIT BREAKER LI PROTECTION		DISCONNECTOR SWITCH		3 POSITION SELECTOR SWITCH		CURRENT TRANSFORMER (CT)		LIMIT SWITCH
	FIXED CIRCUIT BREAKER LS/I PROTECTION		FUSE SWITCH		2 POSITION SELECTOR SWITCH		VOLTAGE/POWER TRANSFORMER		AC/DC CONVERTER
	FIXED CIRCUIT BREAKER LSI PROTECTION		FUSE		INDICATION LAMP		VOLTMETER		INTERLOCK
	FIXED CIRCUIT BREAKER LSIG PROTECTION		MINIATURE CIRCUIT BREAKER		DOOR LAMP		AMMETER		TERMINAL BLOCK
	FIXED CIRCUIT BREAKER LSIRc PROTECTION		COIL		HEATER		DIGITAL METER		CAPACITOR BANK
	DRAW-OUT CIRCUIT BREAKER		ON DELAY TIMER		FAN		BATTERY		SURGE PROTECTIVE DEVICE
	PLUG-IN CIRCUIT BREAKER		OFF DELAY TIMER		THERMOSTAT		CIRCUIT BREAKER MOTOR		SIREN

CROSS REFERENCES DETAILS

XX.X:X

- ROW NO.
- COLUMN NO.
- PAGE NO.

The technical information contained in this document is the exclusive property of UTEC and can not be used or disclosed to third parties of any kind without its written consent.

Rev. No.	Date	Name	Rev. Description
03	29-07-2026	STM	AS PER COMMENTS
02	18-06-2026	STM	A/P ETAP R-E. SLD & COMMENTS
01	19-04-2026	STM	AS PER UPD. SLD & COMMENTS
00	25-03-2026	STM	AS PER SLD

Checked: Ahmed Abukater
Approved: Mohammad Nadeem
Date: 29-07-2026

Customer Name: NPMANJV
Project Name: 219-The Address Hotel & Service Appartments

Item Name: ESMDB-H1-B1-01
400/230V, 3Ph+N+E, 60Hz
Page Title: Legend

DWG. No. U25-2006-Q8479
Ref. No. Q8476
Job No. 3530105760
SAP Line 100
S/N 26-5760-0100-01

Item No. 10
QTY 01

Rev. No. 03
Page No. 5
Total Pages 56

GENERAL CHARACTERISTICS

POWER SYSTEM

SYSTEM VOLTAGE: 400/230VAC, 3Ph, 4W+E

FREQUENCY: 60 Hz

SWITCHBOARD S.C. CAPACTY: 36 kA

Ui (INCOMER AND OUTGOING MCCB): 690 V

Uimp: 8 kV

STANDARDS

STANDARD COMPLIANCE:

- IEC-61439-1 & 2

CLIMATE CONDITION

ALTITUDE:

[X] <=2000m [ ] OTHER: -

AMBIENT TEMPERATURE:

[ ] 35°C [X] OTHER: 40°C

BUSBAR

MAIN BUSBAR RATING.: 900A

MAIN BUSBAR SIZE.: 80mm X 05mm X 1PLY

WITHSTAND CURRENT Icw: 50 kA

NEUTRAL BUSBAR SIZE:

[X] 100% OF PHASE [ ] 20mmX5mmX2PLY

EARTH BUSBAR SIZE:

[ ] 20mmX5mmX1PLY [X] 50mmX5mmX1PLY

[ ] 100% OF NEUTRAL [ ] 50% OF NEUTRAL

EARTHING SYSTEM:

[X] TN-S [ ] TN-C

BUSBAR TREATMENT:

[ ] BARE COPPER [X] TIN PLATED COPPER

BUSBAR MARKING & INSULATION:

[X] PAINT MARK PH: R,Y,BL_N: BK [ ] OTHER: -

ENCLOSURE

TYPE:

[X] SCHNEIDER:

- [ ] BlokSeT
- [X] PrismaSeT International
- [ ] PrismaSeT G
- [ ] Powerline PLUS M

INSTALLATION:

[X] INDOOR [ ] OUTDOOR

MOUNTING:

[X] FLOOR STAND [ ] WALL [ ] FLUSH

DEGREE OF PROTECTION:

[ ] IP-42 [X] IP-54 [ ] OTHER: -

FORM OF SEPARATION:

[ ] 1 [X] 2B TYPE-2 [ ] 3a [ ] 4b

MECHANICAL IMPACT PROTECTION:

[ ] IK-07 [ ] IK-08 [X] IK-10 [ ] OTHER: -

ENCLOSURE SHEET THICKNESS:

[ ] 1.2mm [ ] 1.5mm [X] OTHER: 2.0mm

ENCLOSURE ACCESSORIES:

[ ] CANOPY [X] OTHER: GASKET

DOOR LOCK:

[X] ROTATIVE HANDLE WITH KEY

[ ] SQUARE LOCK [ ] DOUBLE-BIT

ENCLOSURE COLOR:

[ ] RAL-7035 [X] RAL-9003 [X] OTHER: -

PRESENTATION

FRONT:

[X] PLAIN DOOR [ ] FUNCTIONAL DOOR

[ ] TRANSPARENT DOOR

REAR:

[ ] REAR COVER [ ] REAR DOOR

VENTILATION

FRONT:

[X] NATURAL ONLY [ ] FORCED

[ ] VENTILATED ROOF

CONNECTIONS

	INCOMING	OUTGOING
ACCESS:		
[X] FRONT	X	X
[ ] REAR		
ENTRY FROM:		
[X] TOP	X	X
[ ] BOTTOM		
ENTRY BY:		
[X] CABLE	X	X
[ ] BUS DUCT		
TERMINAL CONNECTION:		
[X] DIRECT		X
[X] THROUGH BUSBAR	X	
[ ] THROUGH TB		

- THORUGH BUSBARS FOR CABLES BIGGER THAN 70mm²

AUXILIARY WIRING

VOLTAGE: [X] 2.5mm² [ ] OTHER: -

CURRENT: [X] 2.5mm² [ ] OTHER: -

CONTROL: [X] 1.5mm² [ ] OTHER: -

OTHERS: AUXILIARY WIRING BLACK COLOR

POWER CABLES BLACK COLOR WITH COLORED MARKING SLEEVE RED, YELLOW, BLUE

INDICATION & PUSH BUTTONS

CONTROL PUSH BUTTON COLOR:

CLOSE: [X] GREEN [ ] OTHER: -

OPEN: [X] RED [ ] OTHER: -

INDICATION LAMPS COLOR:

ON: [X] GREEN [ ] OTHER: -

OFF: [X] RED [ ] OTHER: -

TRIP: [X] YELLOW [ ] OTHER: -

VOLTAGE LAMPS COLOR:

- RED, YELLOW, BLUE

LABELING

MATERIAL: [X] PLASTIC [ ] OTHER: -

MOUNTING BY: [X] ADHESIVE [ ] OTHER: -

OTHERS:

3-PLY LAMICOID ENGRAVED NAMEPLATE, BLACK BACKGROUND WITH WHITE LETTERING, NON-CORROSIVE MATERIAL

DIVERSITY FACTOR FOR VERTICAL BUSBARS

- ACCORDING TO IEC 61439-1/2 RECOMMENDATION

NO. OF CB ON VBB	DIVERSITY FACTOR
2 AND 3	0.9
4 AND 5	0.8
6 AND 9	0.7
10 AND MORE	0.6

REMARKS

- CABLES BIGGER THAN 70mm² REQUIRED EXTENSION BUSBARS

The technical information contained in this document is the exclusive property of UTEC and can not be used or disclosed to third parties of any kind without its written consent.

Rev. No.	Date	Name	Rev. Description
03	29-07-2026	STM	AS PER COMMENTS
02	18-06-2026	STM	A/P ETAP R-E. SLD & COMMENTS
01	19-04-2026	STM	AS PER UPD. SLD & COMMENTS
00	25-03-2026	STM	AS PER SLD

Checked: Ahmed Abukater

Approved: Mohammad Nadeem

Date: 29-07-2026

Customer Name: NPMANJV

Project Name: 219-The Address Hotel & Service Appartments

Item Name: ESMDB-H1-B1-01 400/230V, 3Ph+N+E, 60Hz

Page Title: General Characteristics

DWG. No. U25-2006-Q8479
Ref. No. Q8476
Job No. 3530105760
SAP Line 100
S/N 26-5760-0100-01

Item No. 10

QTY 01

Rev. No. 03

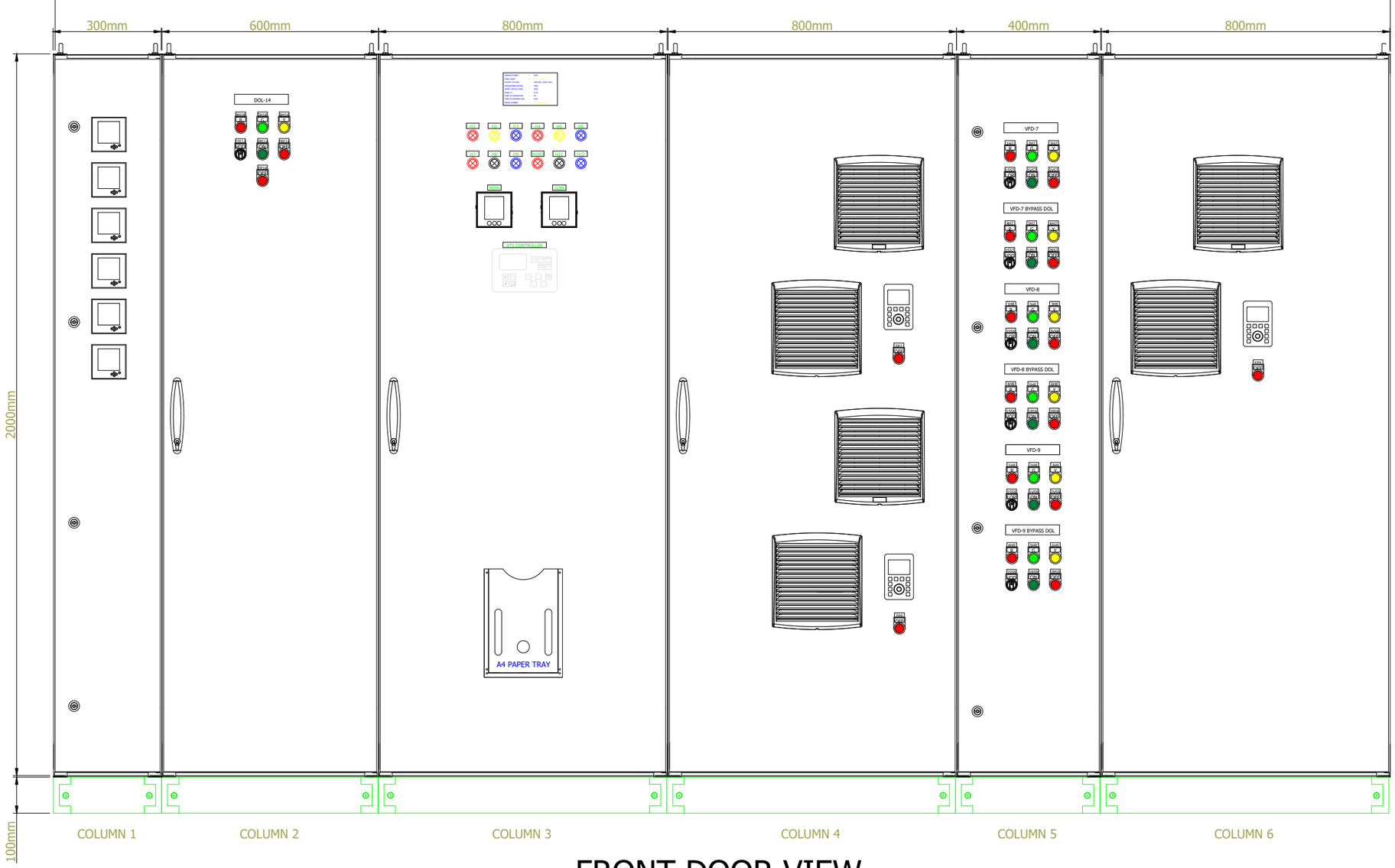

FRONT DOOR VIEW

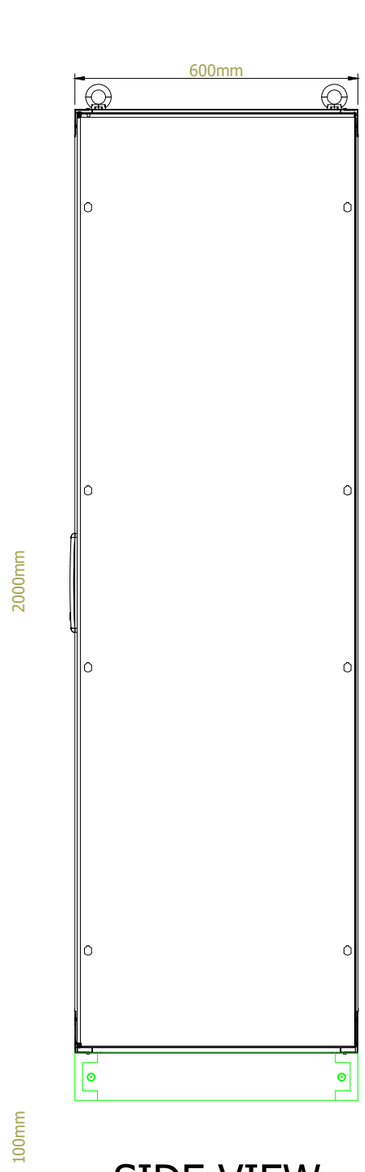

SIDE VIEW

The technical information contained in this document is the exclusive property of UTEC and can not be used or disclosed to third parties of any kind without its written consent.

Rev. No.	Date	Name	Rev. Description
03	29-07-2026	STM	AS PER COMMENTS
02	18-06-2026	STM	A/P ETAP R-E. SLD & COMMENTS
01	19-04-2026	STM	AS PER UPD. SLD & COMMENTS
00	25-03-2026	STM	AS PER SLD

Checked: Ahmed Abukater
Approved: Mohammad Nadeem
Date: 29-07-2026

Customer Name: NPMANJV
Project Name: 219-The Address Hotel & Service Appartments

Item Name: ESMDB-H1-B1-01
400/230V, 3Ph+N+E, 60Hz
Page Title: Panel Layout

DWG. No. U25-2006-Q8479
Ref. No. Q8476
Job No. 3530105760
SAP Line 100
S/N 26-5760-0100-01

Item No. 10
QTY 01

=
+
Rev. No. 03
Page No. 7
Total Pages 56

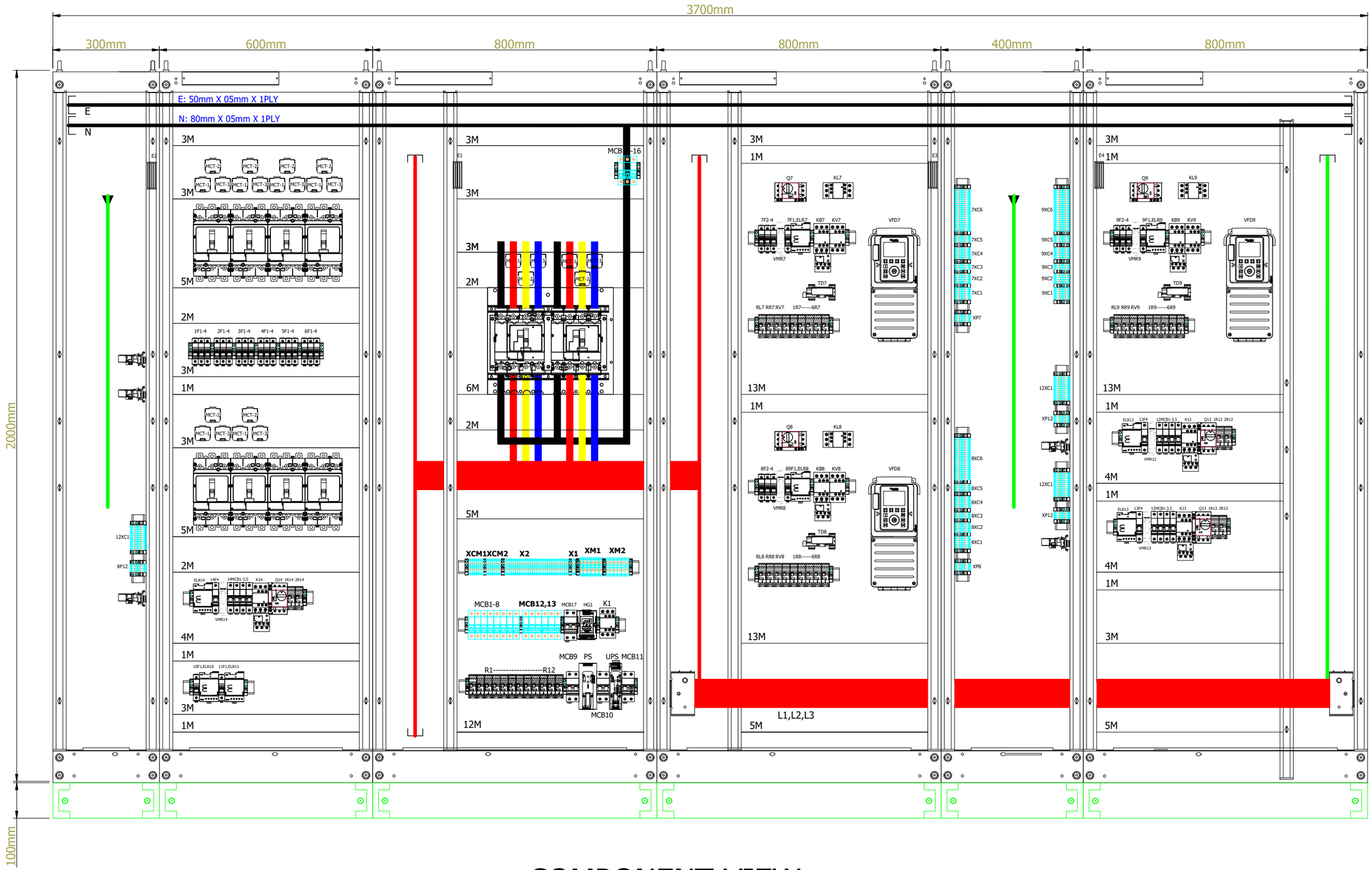

COMPONENT VIEW

The technical information contained in this document is the exclusive property of UTEC and can not be used or disclosed to third parties of any kind without its written consent.

Rev. No.	Date	Name	Rev. Description
03	29-07-2026	STM	AS PER COMMENTS
02	18-06-2026	STM	A/P ETAP R-E. SLD & COMMENTS
01	19-04-2026	STM	AS PER UPD. SLD & COMMENTS
00	25-03-2026	STM	AS PER SLD

Checked: Ahmed Abukater
Approved: Mohammad Nadeem
Date: 29-07-2026

Customer Name: NPMANJV
Project Name: 219-The Address Hotel & Service Appartments

Item Name: ESMDB-H1-B1-01
400/230V, 3Ph+N+E, 60Hz
Page Title: Panel Layout

DWG. No. U25-2006-Q8479
Ref. No. Q8476
Job No. 3530105760
SAP Line 100
S/N 26-5760-0100-01

Item No. 10
QTY 01

=
+
Rev. No. 03
Page No. 8
Total Pages 56

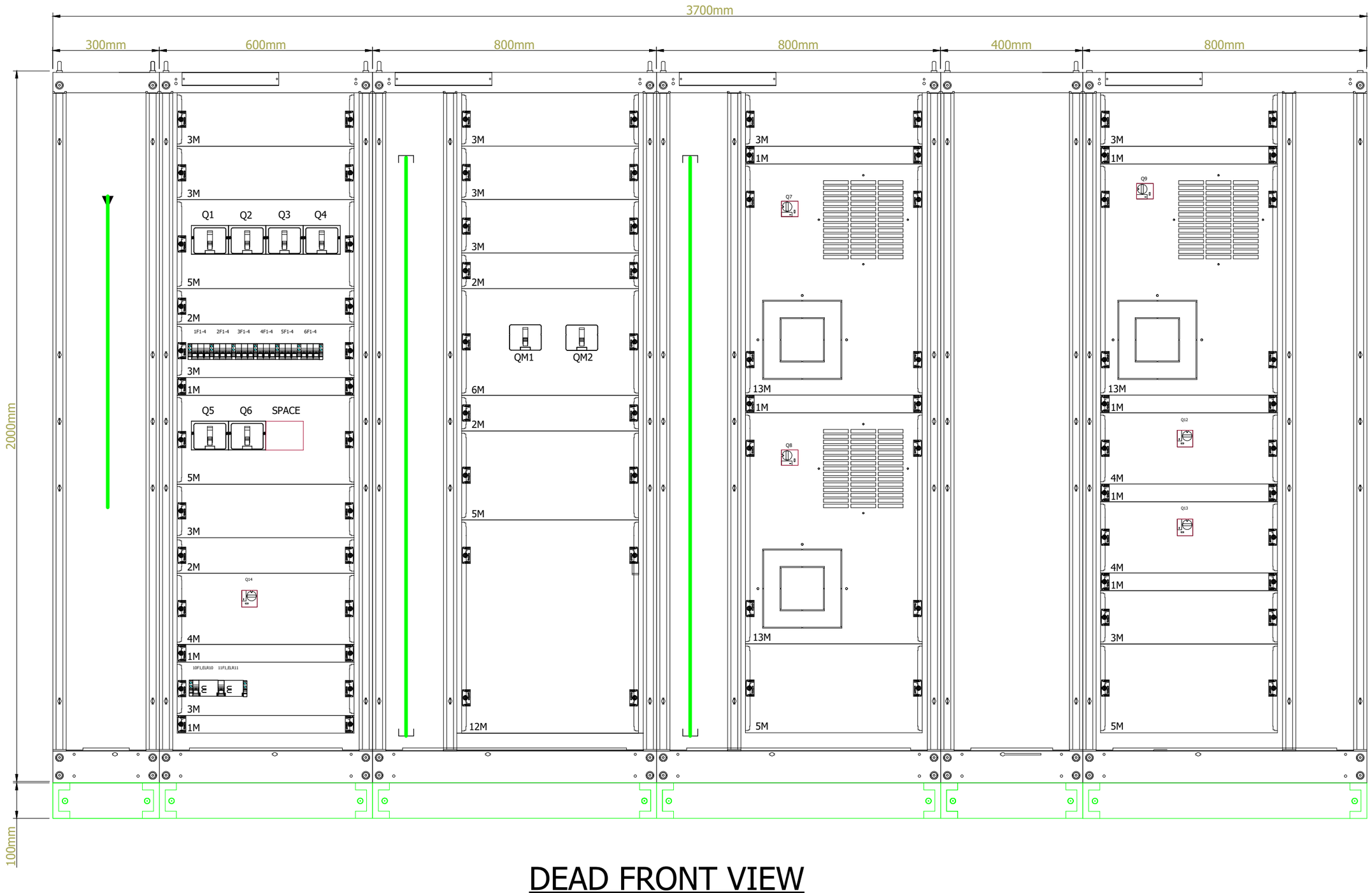

DEAD FRONT VIEW

03	29-07-2026	STM	AS PER COMMENTS	Checked Ahmed Abukater	Customer Name NPMANJV	Item Name ESMDB-H1-B1-01 400/230V, 3Ph+N+E, 60Hz	DWG. No. U25-2006-Q8479	Item No. 10	=
02	18-06-2026	STM	A/P ETAP R-E. SLD & COMMENTS				Ref. No. Q8476		+
01	19-04-2026	STM	AS PER UPD. SLD & COMMENTS	Approved Mohammad Nadeem	Project Name 219-The Address Hotel & Service Appartments	Page Title Panel Layout	Job No. 3530105760	QTY 01	Rev. No. 03
00	25-03-2026	STM	AS PER SLD				SAP Line 100		Page No. 9
Rev. No.	Date	Name	Rev. Description	Date 29-07-2026			S/N 26-5760-0100-01		Total Pages 56

The technical information contained in this document is the exclusive property of UTEC and can not be used or disclosed to third parties of any kind without its written consent.

NAME PLATE DETAILS

150 mm

120 mm

MANUFACTURER	:	UTEC
PANEL NAME	:	ESMDB-H1-B1-01
SYSTEM VOLTAGE	:	400/230V, 3P4W, 60Hz
MAIN BUSBAR RATING	:	700A
SHORT CIRCUIT LEVEL	:	36kA
PANEL IP	:	IP-54
FORM OF SEPARATION	:	2B TYPE-2
YEAR OF MANUFACTURE	:	2026
SERIAL NUMBER	:	26-5760-0100-01

NOTE: TEXT HEIGHT - 5.0 mm, TEXT FONT - HELVETICA MEDIUM.

The technical information contained in this document is the exclusive property of UTEC and can not be used or disclosed to third parties of any kind without its written consent.

Rev. No.	Date	Name	Rev. Description
03	29-07-2026	STM	AS PER COMMENTS
02	18-06-2026	STM	A/P ETAP R-E. SLD & COMMENTS
01	19-04-2026	STM	AS PER UPD. SLD & COMMENTS
00	25-03-2026	STM	AS PER SLD

Checked: Ahmed Abukater
Approved: Mohammad Nadeem
Date: 29-07-2026

Customer Name: NPMANJV
Project Name: 219-The Address Hotel & Service Appartments
Item Name: ESMDB-H1-B1-01 400/230V, 3Ph+N+E, 60Hz
Page Title: Name Plate Details

DWG. No. U25-2006-Q8479
Ref. No. Q8476
Job No. 3530105760
SAP Line 100
S/N 26-5760-0100-01

Item No. 10
QTY 01

Rev. No. 03
Page No. 10
Total Pages 56

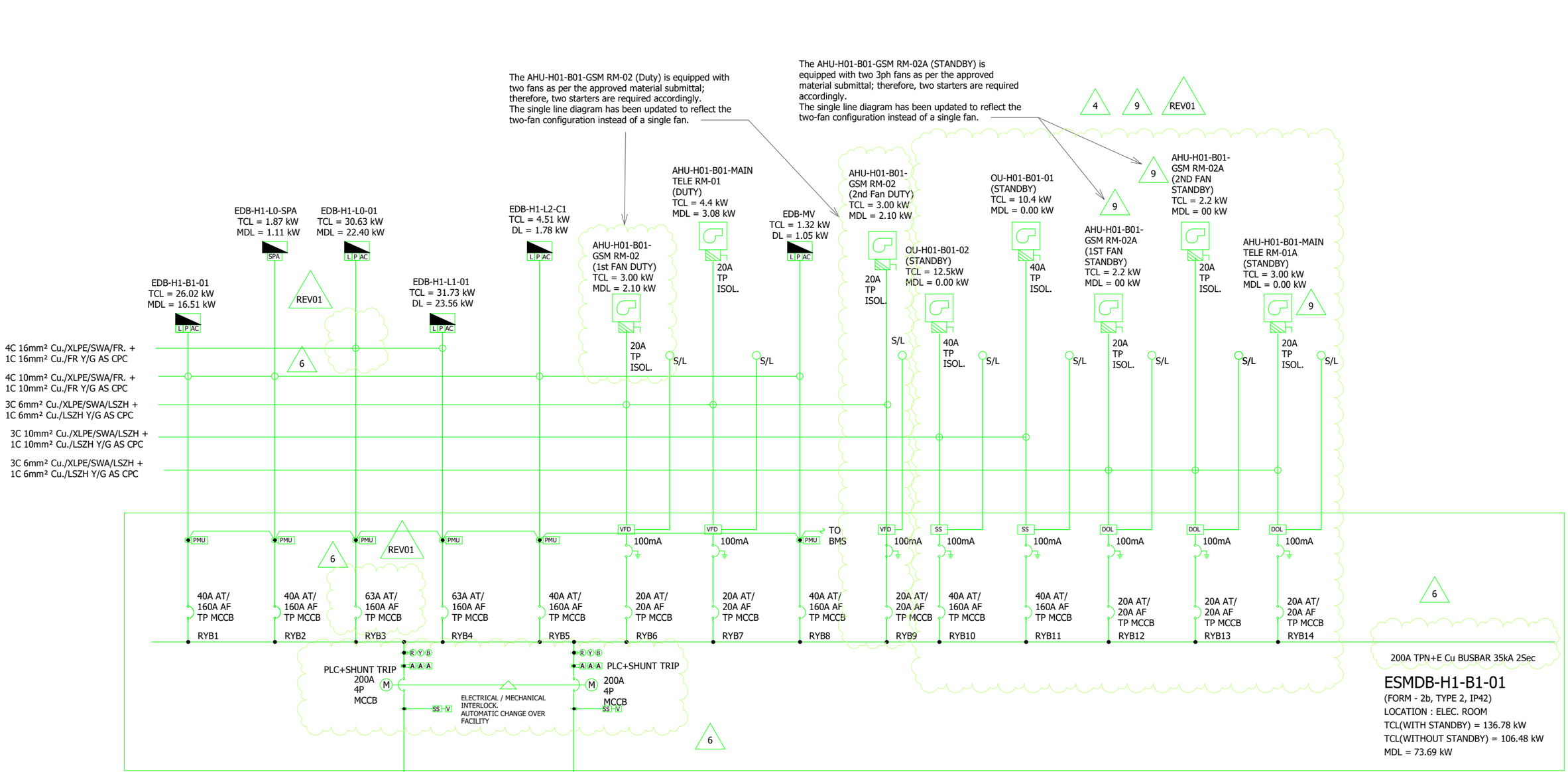

SOFT STARTERS ARE CANCELLED AS REQUESTED BY CUSTOMER

Rev. No.	Date	Name	Rev. Description
03	29-07-2026	STM	AS PER COMMENTS
02	18-06-2026	STM	A/P ETAP R-E. SLD & COMMENTS
01	19-04-2026	STM	AS PER UPD. SLD & COMMENTS
00	25-03-2026	STM	AS PER SLD

Checked: Ahmed Abukater
Approved: Mohammad Nadeem
Date: 29-07-2026

Customer Name: NPMANJV
Project Name: 219-The Address Hotel & Service Appartments

Item Name: ESMDB-H1-B1-01
400/230V, 3Ph+N+E, 60Hz
Page Title: Client's SLD

DWG. No. U25-2006-Q8479
Ref. No. Q8476
Job No. 3530105760
SAP Line 100
S/N 26-5760-0100-01

Item No. 10
QTY 01

Rev. No. 03
Page No. 11
Total Pages 56

The technical information contained in this document is the exclusive property of UTEC and can not be used or disclosed to third parties of any kind without its written consent.

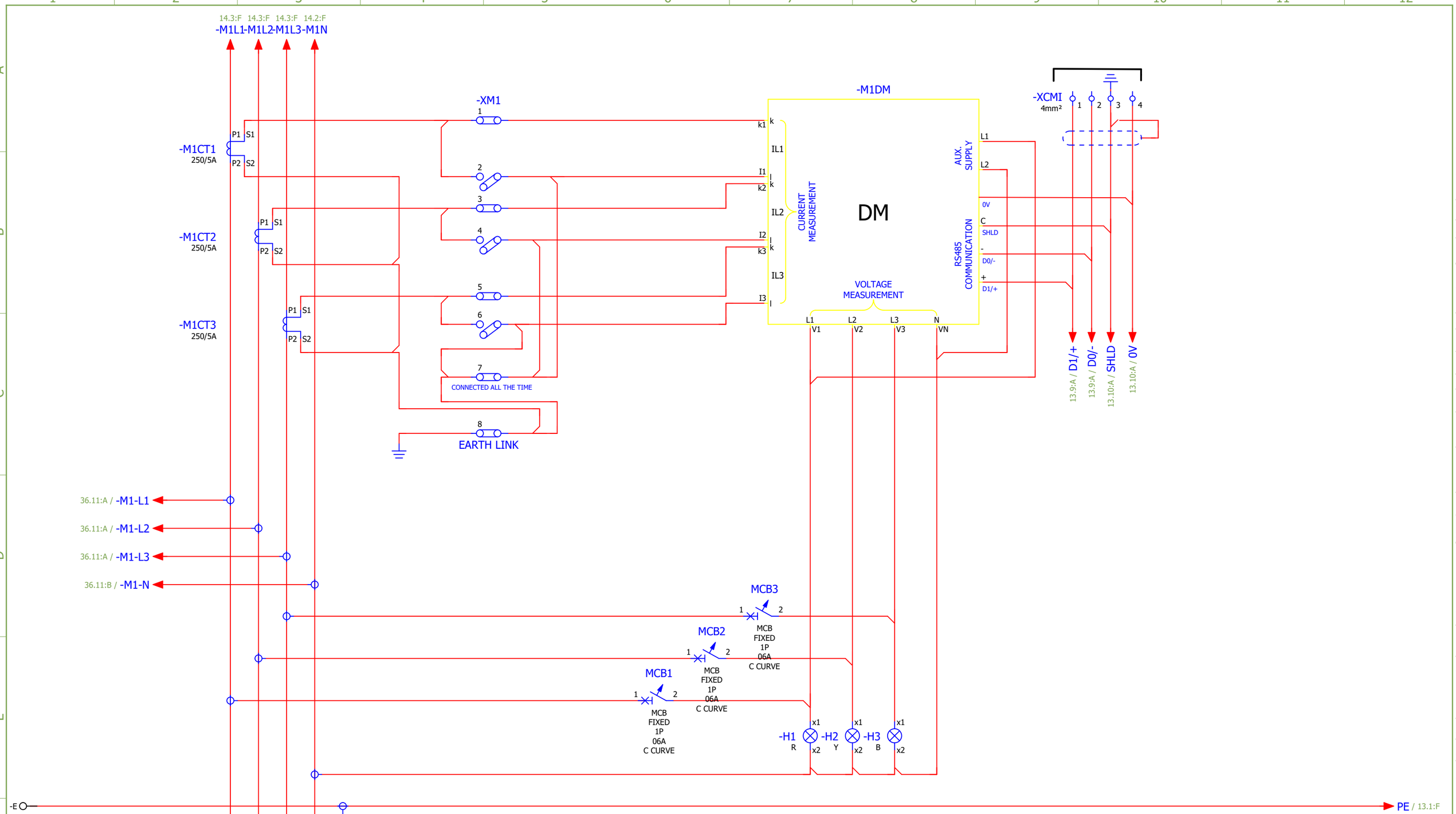

SERVICE	INCOMING-01
CABLE SIZE	4C 95mm² Cu./XLPE/SWA/FR.+ 1C 50mm² Cu./FR Y/G AS CPC
FEEDER DESCRIPTION	F-LV-H1-1

Rev. No.	Date	Name	Rev. Description
03	29-07-2026	STM	AS PER COMMENTS
02	18-06-2026	STM	A/P ETAP R-E. SLD & COMMENTS
01	19-04-2026	STM	AS PER UPD. SLD & COMMENTS
00	25-03-2026	STM	AS PER SLD

Checked: Ahmed Abukater
Approved: Mohammad Nadeem
Date: 29-07-2026

Customer Name: NPMANJV
Project Name: 219-The Address Hotel & Service Appartments

Item Name: ESMDB-H1-B1-01
400/230V, 3Ph+N+E, 60Hz
Page Title: Schematic Diagram (Incoming)

DWG. No. U25-2006-Q8479
Ref. No. Q8476
Job No. 3530105760
SAP Line 100
S/N 26-5760-0100-01

Item No. 10
QTY 01

Rev. No. 03
Page No. 12
Total Pages 56

The technical information contained in this document is the exclusive property of UTEC and can not be used or disclosed to third parties of any kind without its written consent.

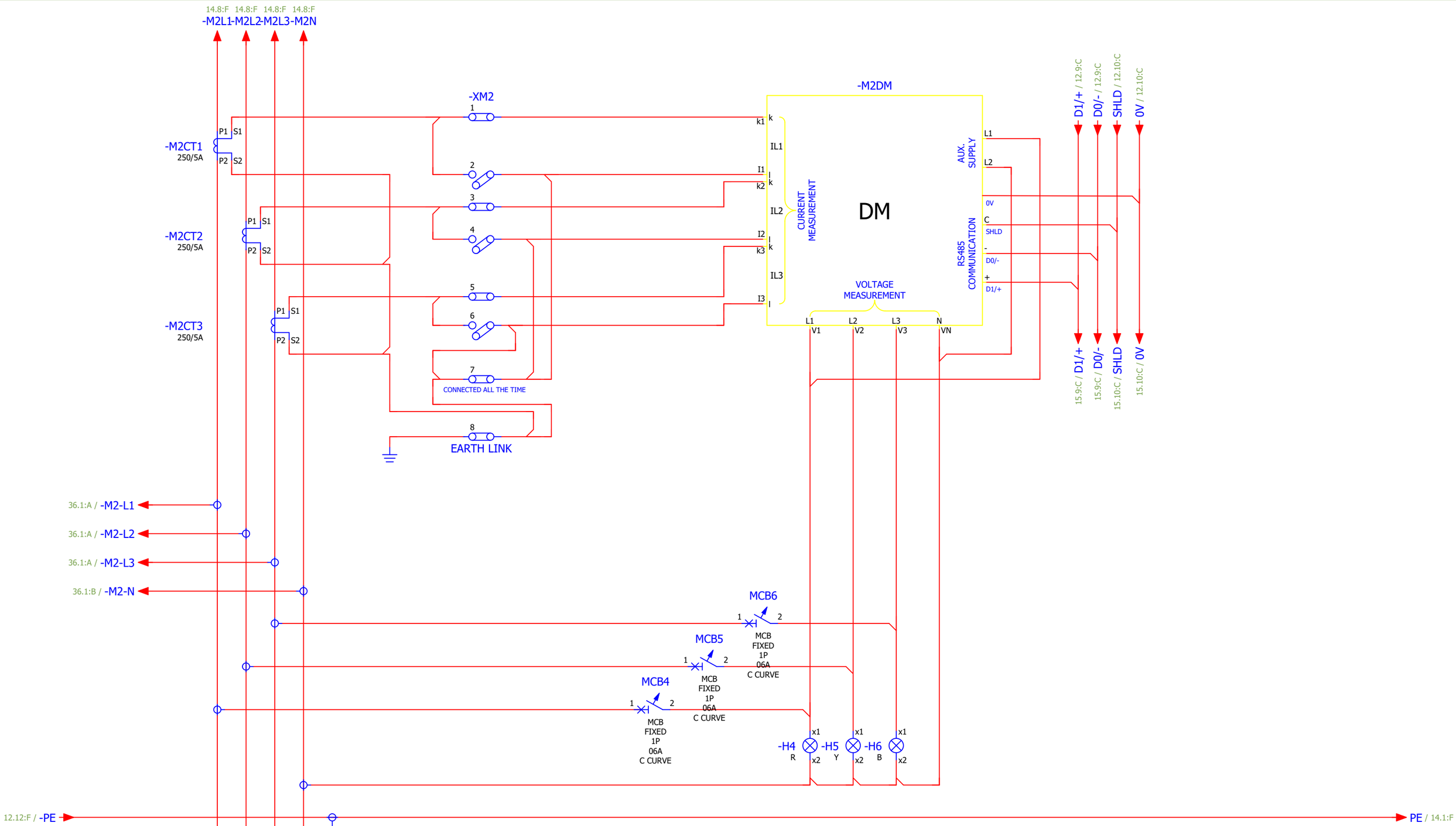

SERVICE	INCOMING-02
CABLE SIZE	4C 70mm² Cu./XLPE/SWA/FR+ 1C 35mm² Cu./FR Y/G AS CPC
FEEDER DESCRIPTION	F-EMDB-01

Rev. No.	Date	Name	Rev. Description
03	29-07-2026	STM	AS PER COMMENTS
02	18-06-2026	STM	A/P ETAP R-E. SLD & COMMENTS
01	19-04-2026	STM	AS PER UPD. SLD & COMMENTS
00	25-03-2026	STM	AS PER SLD

Checked: Ahmed Abukater
Approved: Mohammad Nadeem
Date: 29-07-2026

Customer Name: NPMANJV
Project Name: 219-The Address Hotel & Service Appartments

Item Name: ESMDB-H1-B1-01
400/230V, 3Ph+N+E, 60Hz
Page Title: Schematic Diagram (Incoming)

DWG. No. U25-2006-Q8479
Ref. No. Q8476
Job No. 3530105760
SAP Line 100
S/N 26-5760-0100-01

Item No. 10
QTY 01

Rev. No. 03
Page No. 13
Total Pages 56

The technical information contained in this document is the exclusive property of UTEC and can not be used or disclosed to third parties of any kind without its written consent.

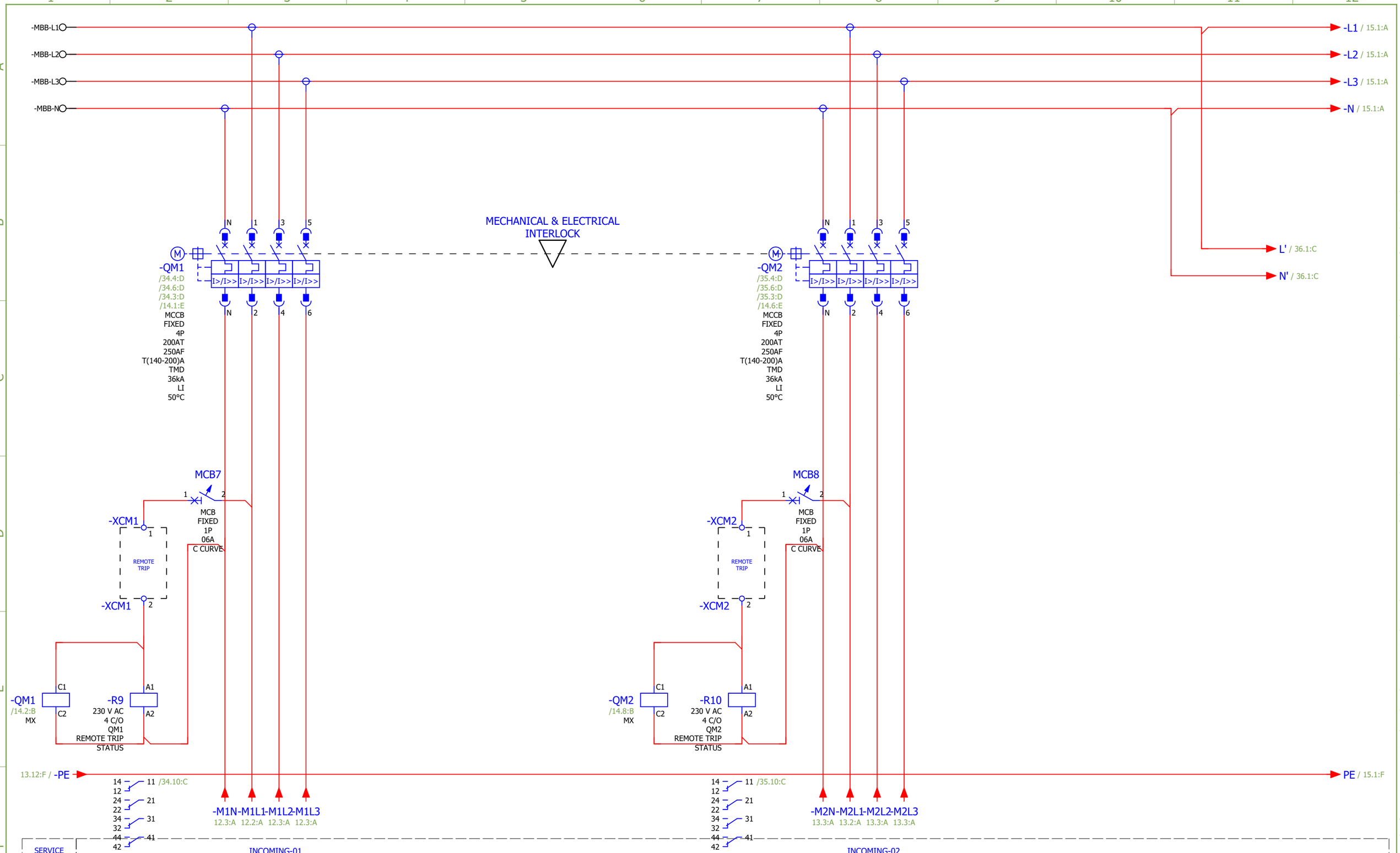

Rev. No.	Date	Name	Rev. Description
03	29-07-2026	STM	AS PER COMMENTS
02	18-06-2026	STM	A/P ETAP R-E. SLD & COMMENTS
01	19-04-2026	STM	AS PER UPD. SLD & COMMENTS
00	25-03-2026	STM	AS PER SLD

Checked: Ahmed Abukater
Approved: Mohammad Nadeem
Date: 29-07-2026

Customer Name: NPMANJV
Project Name: 219-The Address Hotel & Service Appartments

Item Name: ESMDB-H1-B1-01
400/230V, 3Ph+N+E, 60Hz
Page Title: Schematic Diagram (Incoming)

DWG. No. U25-2006-Q8479
Ref. No. Q8476
Job No. 3530105760
SAP Line 100
S/N 26-5760-0100-01

Item No. 10
QTY 01

=
+
Rev. No. 03
Page No. 14
Total Pages 56

The technical information contained in this document is the exclusive property of UTEC and can not be used or disclosed to third parties of any kind without its written consent.

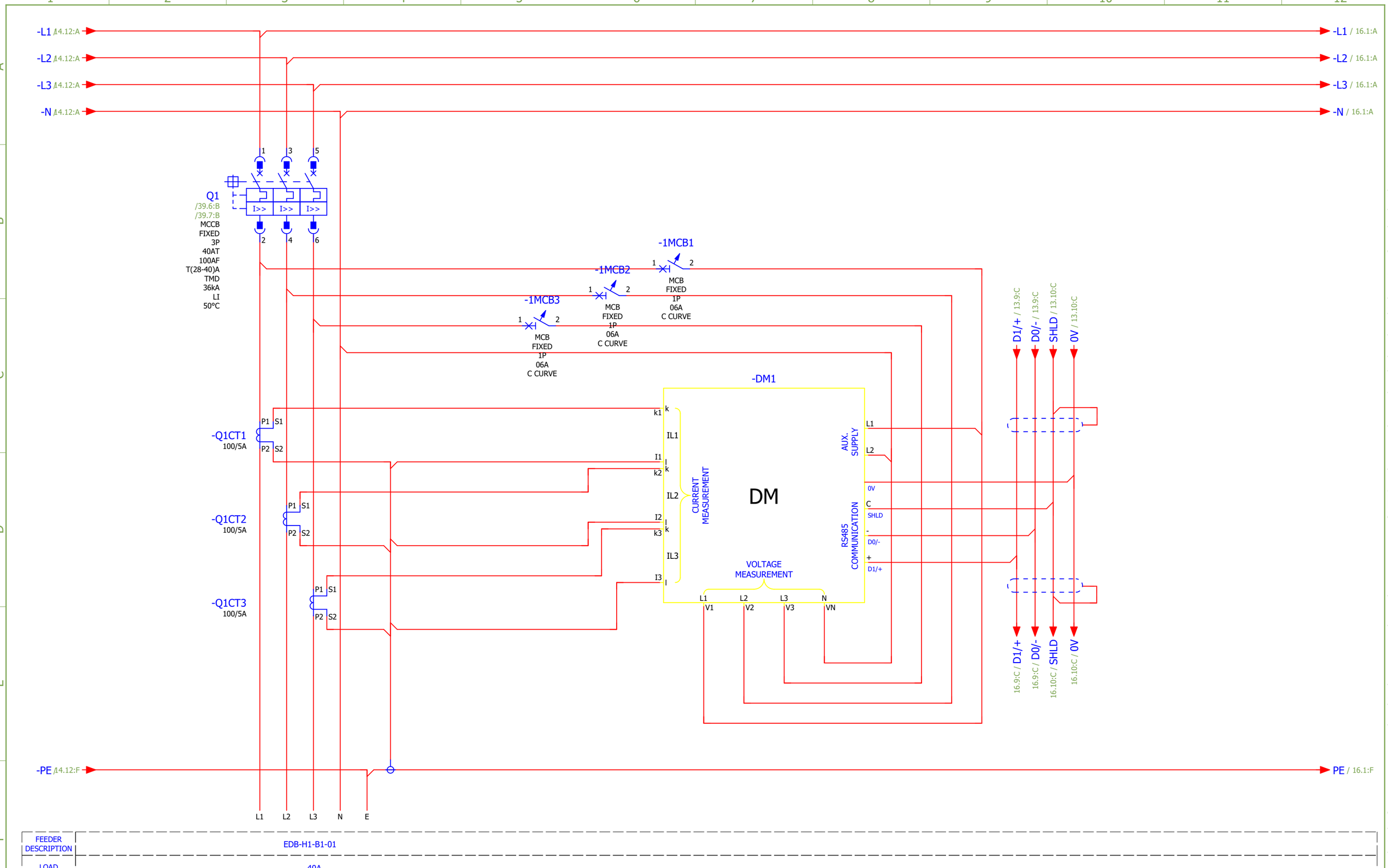

FEEDER DESCRIPTION	EDB-H1-B1-01
LOAD	40A
Cable Size	4C-10mm² Cu. XLPE / SWA / LSZH + 1C 10mm² Cu./LSZH Y/G AS CPC

Rev. No.	Date	Name	Rev. Description
03	29-07-2026	STM	AS PER COMMENTS
02	18-06-2026	STM	A/P ETAP R-E. SLD & COMMENTS
01	19-04-2026	STM	AS PER UPD. SLD & COMMENTS
00	25-03-2026	STM	AS PER SLD

Checked: Ahmed Abukater
Approved: Mohammad Nadeem
Date: 29-07-2026

Customer Name: NPMANJV
Project Name: 219-The Address Hotel & Service Appartments

Item Name: ESMDB-H1-B1-01
400/230V, 3Ph+N+E, 60Hz
Page Title: Schematic Diagram (Outgoing)

DWG. No. U25-2006-Q8479
Ref. No. Q8476
Job No. 3530105760
SAP Line 100
S/N 26-5760-0100-01

Item No. 10
QTY 01

=
+
Rev. No. 03
Page No. 15
Total Pages 56

The technical information contained in this document is the exclusive property of UTEC and can not be used or disclosed to third parties of any kind without its written consent.

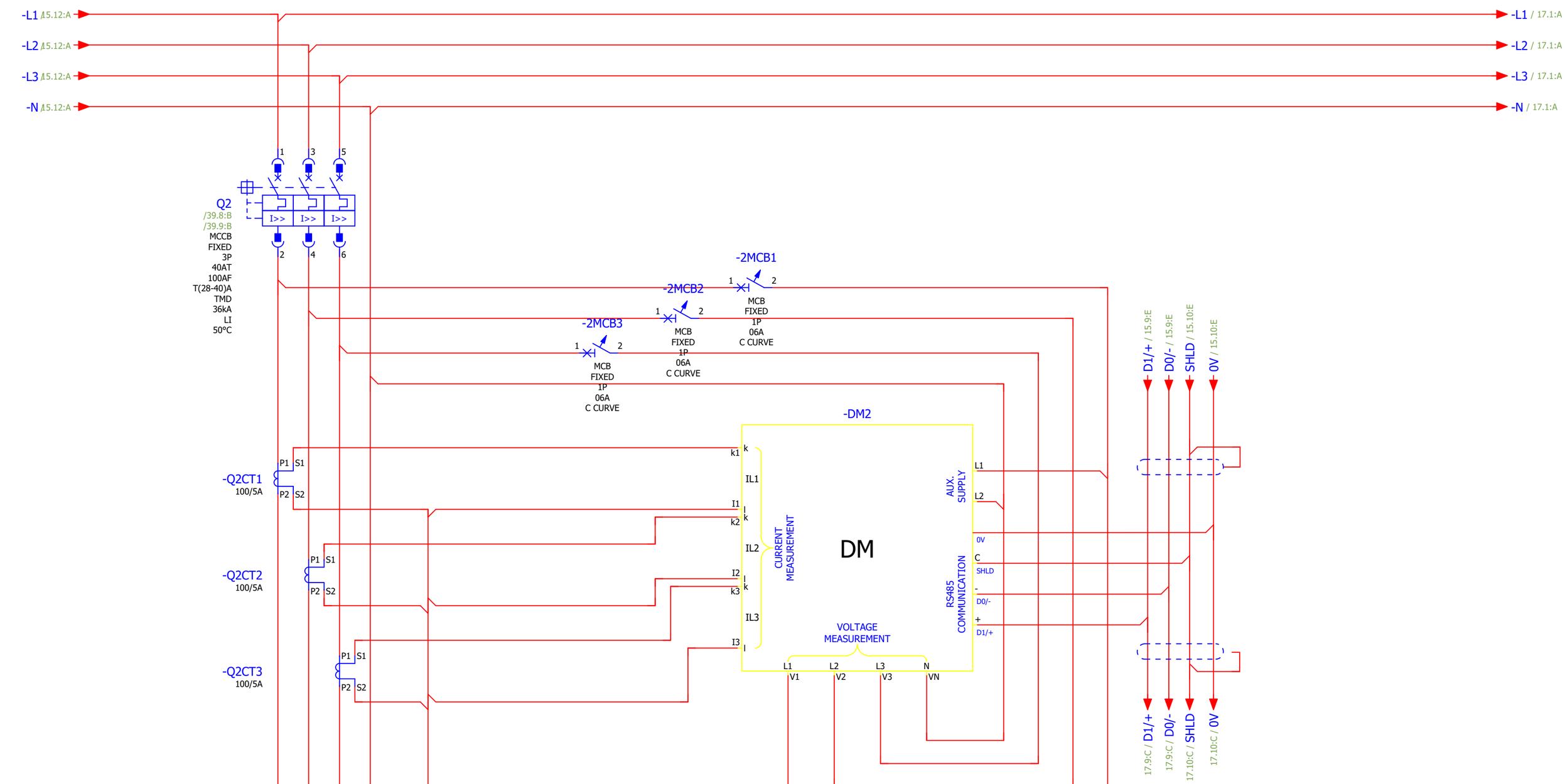

FEEDER DESCRIPTION	EDB-H1-L0-SPA
LOAD	40A
Cable Size	4C-10mm² Cu. XLPE / SWA / LSZH + 1C 10mm² Cu./LSZH Y/G AS CPC

Rev. No.	Date	Name	Rev. Description
03	29-07-2026	STM	AS PER COMMENTS
02	18-06-2026	STM	A/P ETAP R-E. SLD & COMMENTS
01	19-04-2026	STM	AS PER UPD. SLD & COMMENTS
00	25-03-2026	STM	AS PER SLD

Checked: Ahmed Abukater
Approved: Mohammad Nadeem
Date: 29-07-2026

Customer Name: NPMANJV
Project Name: 219-The Address Hotel & Service Appartments

Item Name: ESMDB-H1-B1-01
400/230V, 3Ph+N+E, 60Hz
Page Title: Schematic Diagram (Outgoing)

DWG. No. U25-2006-Q8479
Ref. No. Q8476
Job No. 3530105760
SAP Line 100
S/N 26-5760-0100-01

Item No. 10
QTY 01

=
+
Rev. No. 03
Page No. 16
Total Pages 56

The technical information contained in this document is the exclusive property of UTEC and can not be used or disclosed to third parties of any kind without its written consent.

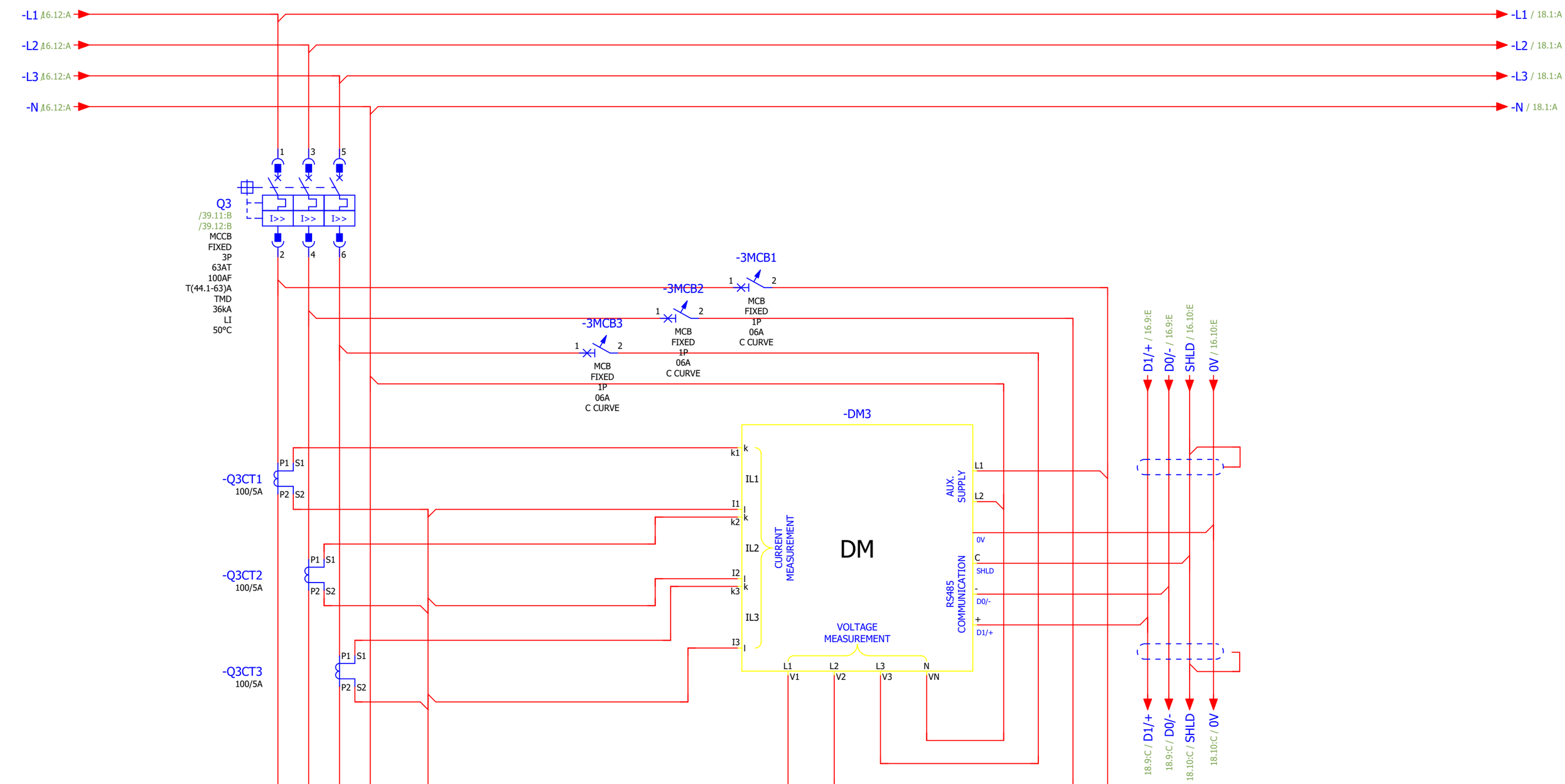

FEEDER DESCRIPTION	EDB-H1-L0-01
LOAD	63A
Cable Size	4C-10mm² Cu. XLPE / SWA / LSZH + 1C 10mm² Cu./LSZH Y/G AS CPC

Rev. No.	Date	Name	Rev. Description
03	29-07-2026	STM	AS PER COMMENTS
02	18-06-2026	STM	A/P ETAP R-E. SLD & COMMENTS
01	19-04-2026	STM	AS PER UPD. SLD & COMMENTS
00	25-03-2026	STM	AS PER SLD

Checked: Ahmed Abukater
Approved: Mohammad Nadeem
Date: 29-07-2026

Customer Name: NPMANJV
Project Name: 219-The Address Hotel & Service Appartments

Item Name: ESMDB-H1-B1-01
400/230V, 3Ph+N+E, 60Hz
Page Title: Schematic Diagram (Outgoing)

DWG. No. U25-2006-Q8479
Ref. No. Q8476
Job No. 3530105760
SAP Line 100
S/N 26-5760-0100-01

Item No. 10
QTY 01

=
+
Rev. No. 03
Page No. 17
Total Pages 56

The technical information contained in this document is the exclusive property of UTEC and can not be used or disclosed to third parties of any kind without its written consent.

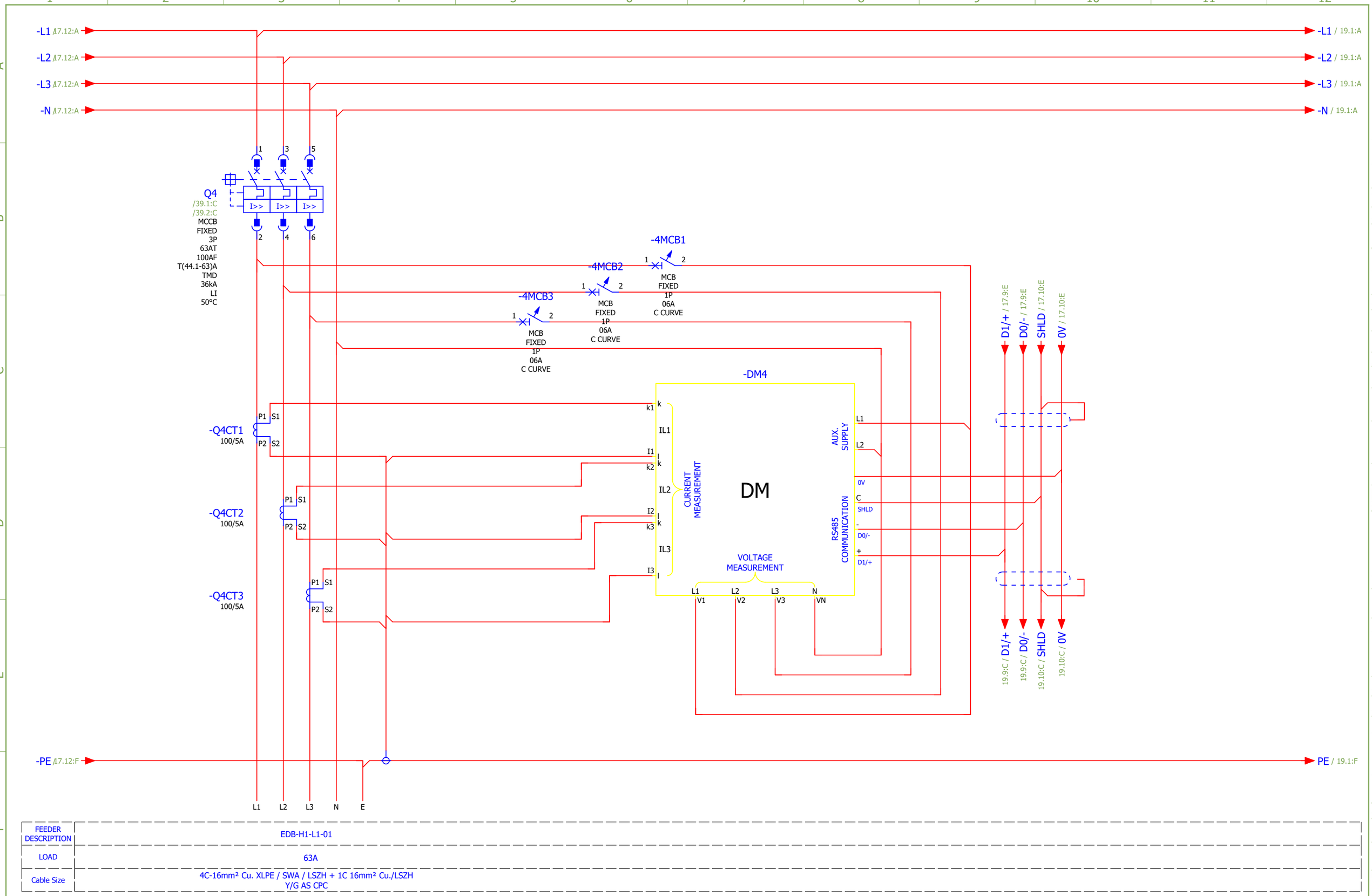

FEEDER DESCRIPTION	EDB-H1-L1-01
LOAD	63A
Cable Size	4C-16mm² Cu. XLPE / SWA / LSZH + 1C 16mm² Cu./LSZH Y/G AS CPC

Rev. No.	Date	Name	Rev. Description
03	29-07-2026	STM	AS PER COMMENTS
02	18-06-2026	STM	A/P ETAP R-E. SLD & COMMENTS
01	19-04-2026	STM	AS PER UPD. SLD & COMMENTS
00	25-03-2026	STM	AS PER SLD

Checked: Ahmed Abukater
Approved: Mohammad Nadeem
Date: 29-07-2026

Customer Name: NPMANJV
Project Name: 219-The Address Hotel & Service Appartments

Item Name: ESMDB-H1-B1-01
400/230V, 3Ph+N+E, 60Hz
Page Title: Schematic Diagram (Outgoing)

DWG. No. U25-2006-Q8479
Ref. No. Q8476
Job No. 3530105760
SAP Line 100
S/N 26-5760-0100-01

Item No. 10
QTY 01

=
+
Rev. No. 03
Page No. 18
Total Pages 56

The technical information contained in this document is the exclusive property of UTEC and can not be used or disclosed to third parties of any kind without its written consent.

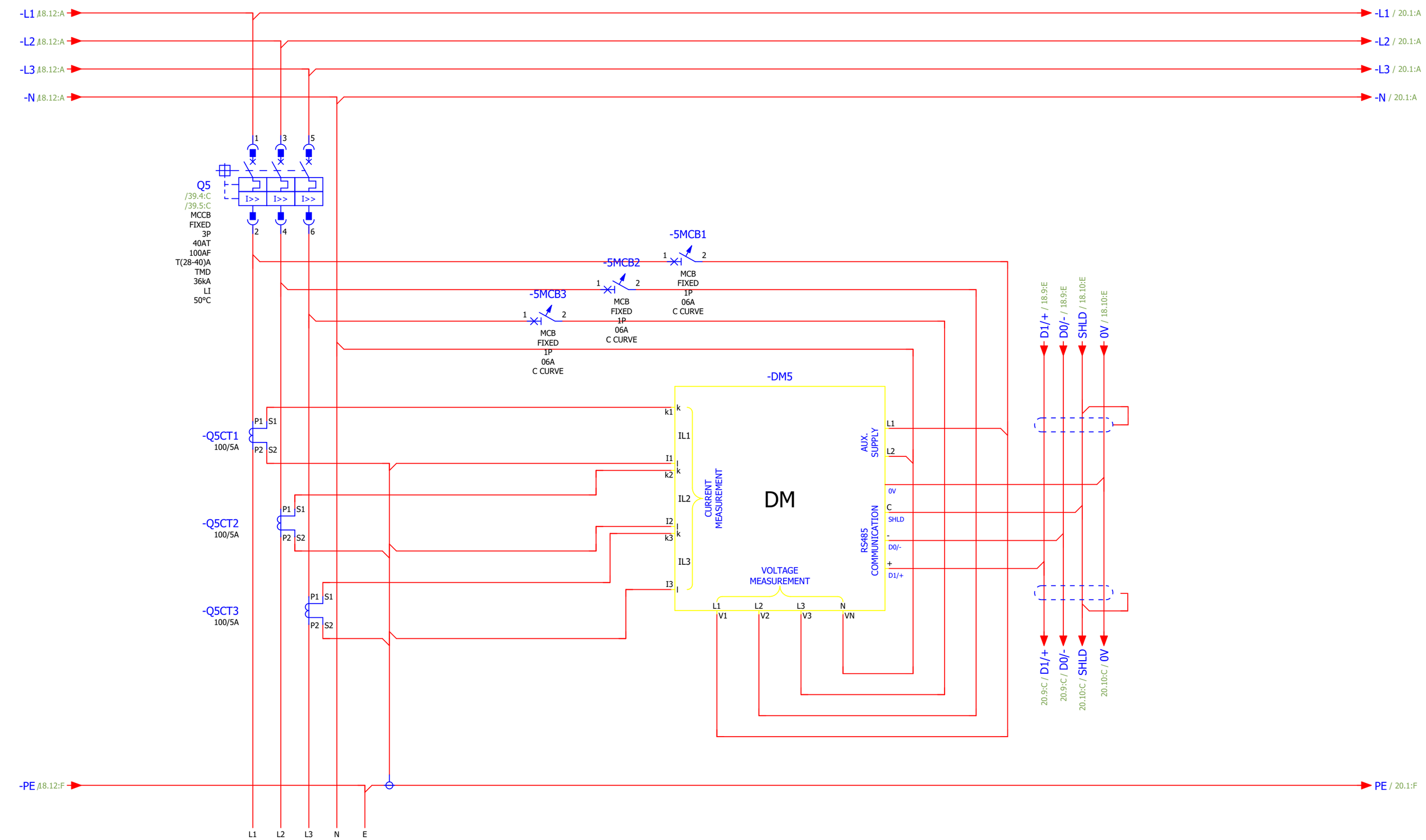

FEEDER DESCRIPTION	EDB-H1-L2-C1
LOAD	40A
Cable Size	4C-10mm² Cu. XLPE / SWA / LSZH + 1C 10mm² Cu./LSZH Y/G AS CPC

Rev. No.	Date	Name	Rev. Description
03	29-07-2026	STM	AS PER COMMENTS
02	18-06-2026	STM	A/P ETAP R-E. SLD & COMMENTS
01	19-04-2026	STM	AS PER UPD. SLD & COMMENTS
00	25-03-2026	STM	AS PER SLD

Checked: Ahmed Abukater
Approved: Mohammad Nadeem
Date: 29-07-2026

Customer Name: NPMANJV
Project Name: 219-The Address Hotel & Service Appartments

Item Name: ESMDB-H1-B1-01
400/230V, 3Ph+N+E, 60Hz
Page Title: Schematic Diagram (Outgoing)

DWG. No. U25-2006-Q8479
Ref. No. Q8476
Job No. 3530105760
SAP Line 100
S/N 26-5760-0100-01

Item No. 10
QTY 01

=
+
Rev. No. 03
Page No. 19
Total Pages 56

The technical information contained in this document is the exclusive property of UTEC and can not be used or disclosed to third parties of any kind without its written consent.

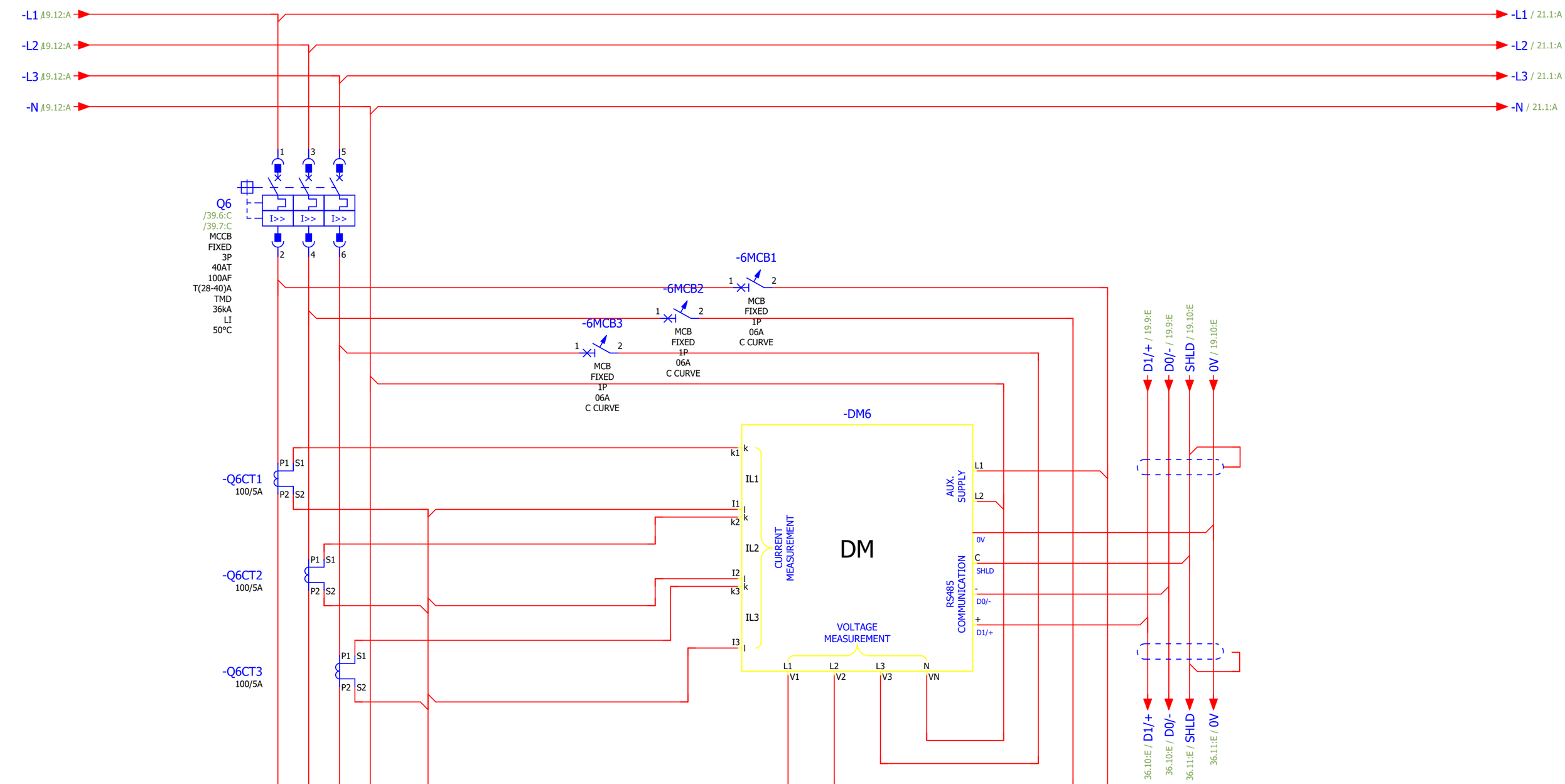

FEEDER DESCRIPTION	EDB-MV
LOAD	40A
Cable Size	4C-10mm² Cu. XLPE / SWA / LSZH + 1C 10mm² Cu./LSZH Y/G AS CPC

Rev. No.	Date	Name	Rev. Description
03	29-07-2026	STM	AS PER COMMENTS
02	18-06-2026	STM	A/P ETAP R-E. SLD & COMMENTS
01	19-04-2026	STM	AS PER UPD. SLD & COMMENTS
00	25-03-2026	STM	AS PER SLD

Checked: Ahmed Abukater
Approved: Mohammad Nadeem
Date: 29-07-2026

Customer Name: NPMANJV
Project Name: 219-The Address Hotel & Service Appartments

Item Name: ESMDB-H1-B1-01
400/230V, 3Ph+N+E, 60Hz
Page Title: Schematic Diagram (Outgoing)

DWG. No. U25-2006-Q8479
Ref. No. Q8476
Job No. 3530105760
SAP Line 100
S/N 26-5760-0100-01

Item No. 10
QTY 01

=
+
Rev. No. 03
Page No. 20
Total Pages 56

The technical information contained in this document is the exclusive property of UTEC and can not be used or disclosed to third parties of any kind without its written consent.

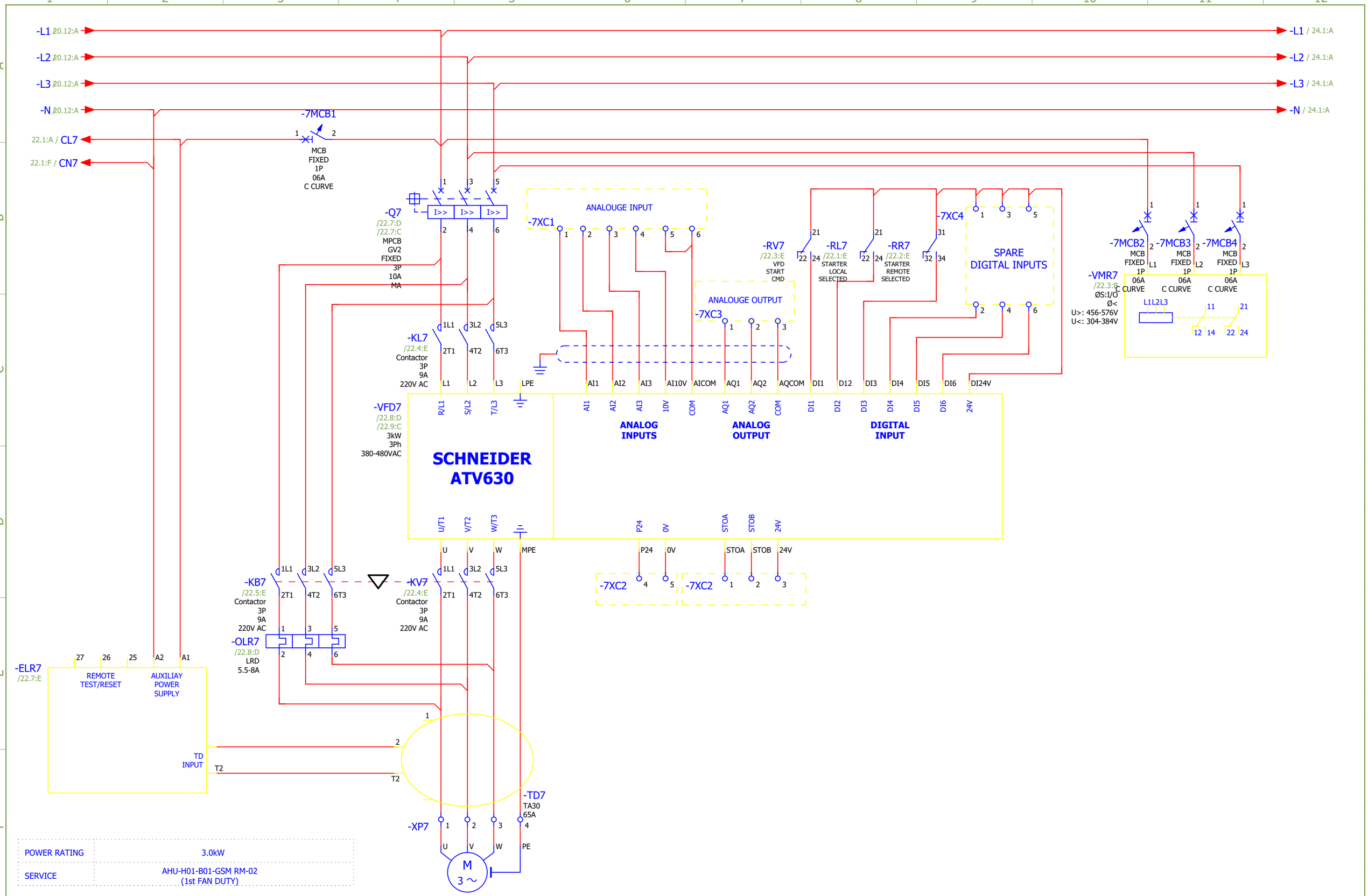

The technical information contained in this document is the exclusive property of UTEC and can not be used or disclosed to third parties of any kind without its written consent.

Rev. No.	Date	Name	Rev. Description
03	29-07-2026	STM	AS PER COMMENTS
02	18-06-2026	STM	A/P ETAP R-E. SLD & COMMENTS
01	19-04-2026	STM	AS PER UPD. SLD & COMMENTS
00	25-03-2026	STM	AS PER SLD

Checked: Ahmed Abukater
Approved: Mohammad Nadeem
Date: 29-07-2026

Customer Name: NPMANJV
Project Name: 219-The Address Hotel & Service Appartments

Item Name: ESMDB-H1-B1-01
400/230V, 3Ph+N+E, 60Hz
Page Title: Schematic Diagram (VFD Starter)

DWG. No. U25-2006-Q8479
Ref. No. Q8476
Job No. 3530105760
SAP Line 100
S/N 26-5760-0100-01

Item No. 10
QTY 01

=
+
Rev. No. 03
Page No. 21
Total Pages 56

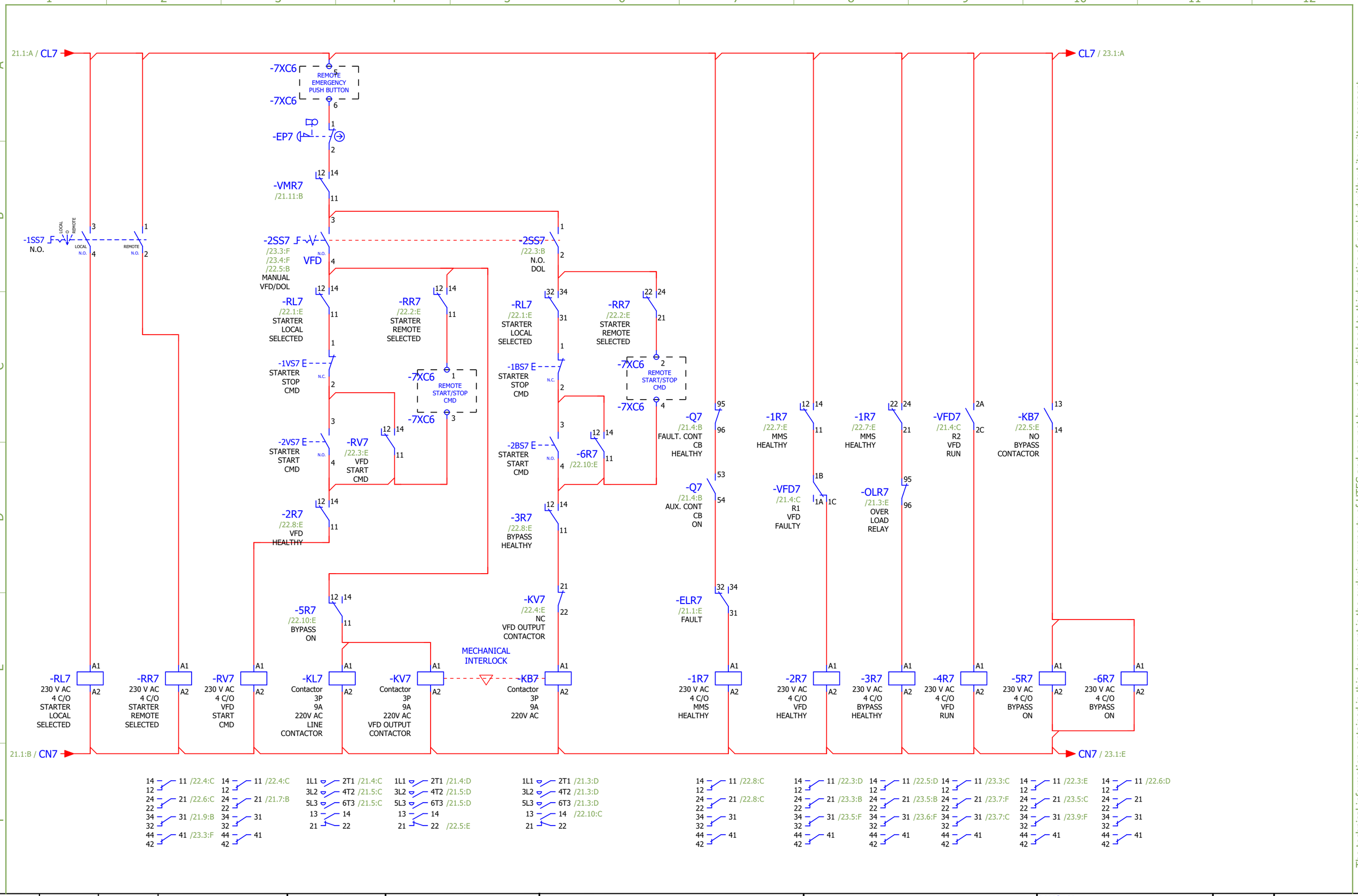

The technical information contained in this document is the exclusive property of UTEC and can not be used or disclosed to third parties of any kind without its written consent.

Rev. No.	Date	Name	Rev. Description
03	29-07-2026	STM	AS PER COMMENTS
02	18-06-2026	STM	A/P ETAP R-E. SLD & COMMENTS
01	19-04-2026	STM	AS PER UPD. SLD & COMMENTS
00	25-03-2026	STM	AS PER SLD

Checked: Ahmed Abukater
Approved: Mohammad Nadeem
Date: 29-07-2026

Customer Name: NPMANJV
Project Name: 219-The Address Hotel & Service Appartments

Item Name: ESMDB-H1-B1-01
400/230V, 3Ph+N+E, 60Hz
Page Title: Schematic Diagram (VFD Starter)

DWG. No. U25-2006-Q8479
Ref. No. Q8476
Job No. 3530105760
SAP Line 100
S/N 26-5760-0100-01

Item No. 10
QTY 01

=
+
Rev. No. 03
Page No. 22
Total Pages 56

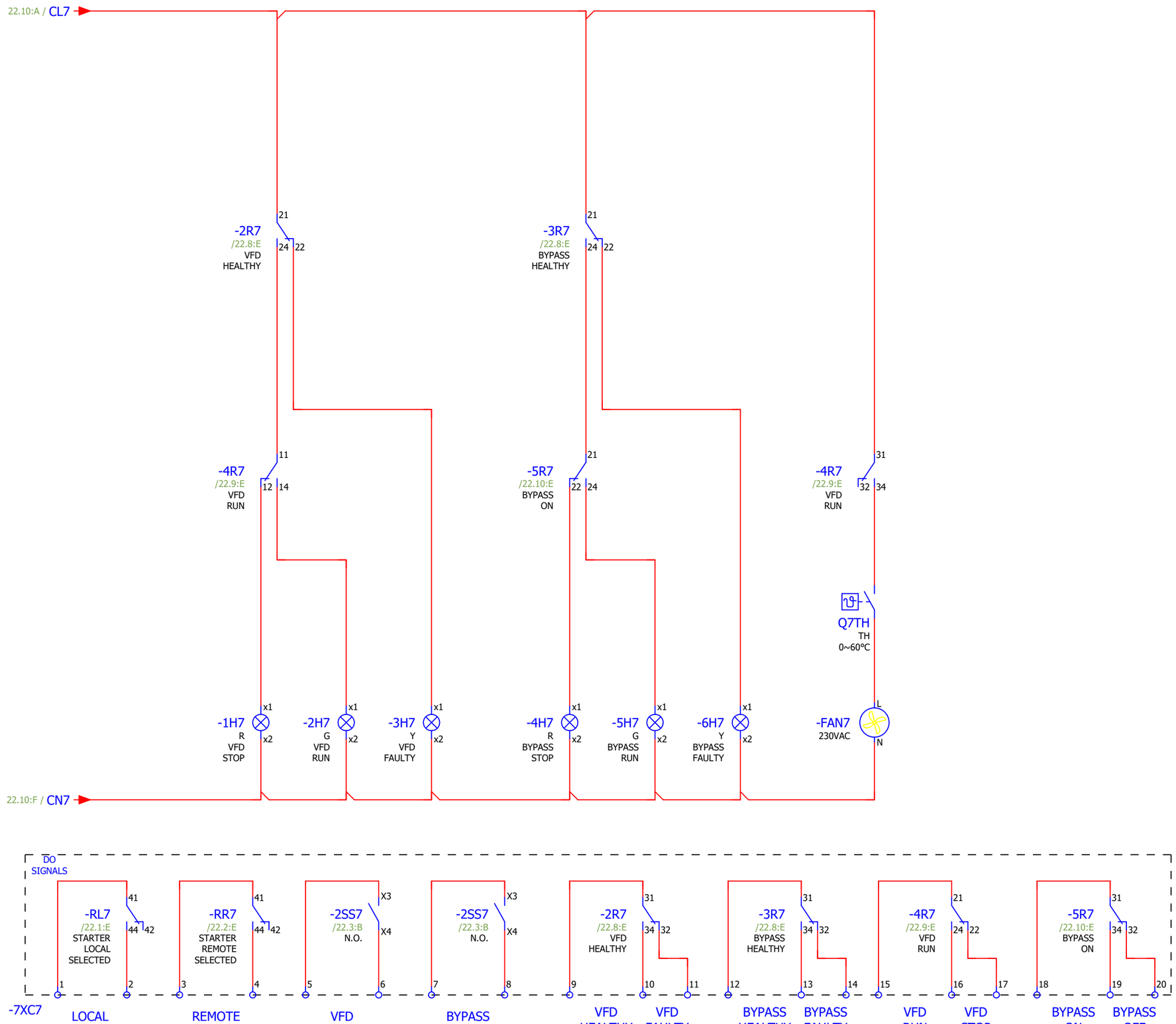

The technical information contained in this document is the exclusive property of UTEC and can not be used or disclosed to third parties of any kind without its written consent.

Rev. No.	Date	Name	Rev. Description
03	29-07-2026	STM	AS PER COMMENTS
02	18-06-2026	STM	A/P ETAP R-E. SLD & COMMENTS
01	19-04-2026	STM	AS PER UPD. SLD & COMMENTS
00	25-03-2026	STM	AS PER SLD

Checked: Ahmed Abukater
Approved: Mohammad Nadeem
Date: 29-07-2026

Customer Name: NPMANJV
Project Name: 219-The Address Hotel & Service Appartments

Item Name: ESMDB-H1-B1-01
400/230V, 3Ph+N+E, 60Hz
Page Title: Schematic Diagram (VFD Starter)

DWG. No. U25-2006-Q8479
Ref. No. Q8476
Job No. 3530105760
SAP Line 100
S/N 26-5760-0100-01

Item No. 10
QTY 01

Rev. No. 03
Page No. 23
Total Pages 56

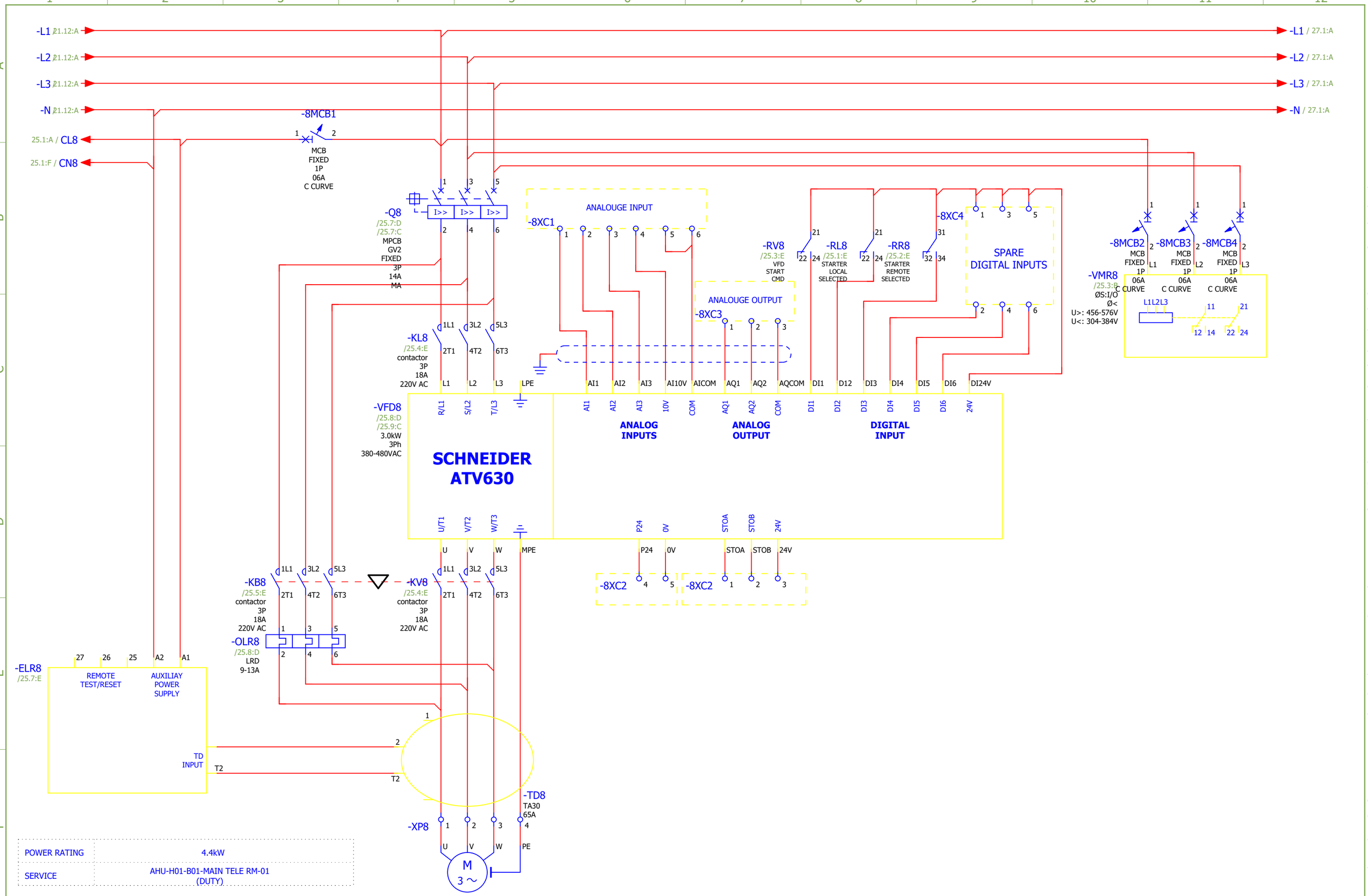

POWER RATING	4.4kW
SERVICE	AHU-H01-B01-MAIN TELE RM-01 (DUTY)

Rev. No.	Date	Name	Rev. Description
03	29-07-2026	STM	AS PER COMMENTS
02	18-06-2026	STM	A/P ETAP R-E. SLD & COMMENTS
01	19-04-2026	STM	AS PER UPD. SLD & COMMENTS
00	25-03-2026	STM	AS PER SLD

Checked: Ahmed Abukater
Approved: Mohammad Nadeem
Date: 29-07-2026

Customer Name: NPMANJV
Project Name: 219-The Address Hotel & Service Appartments

Item Name: ESMDB-H1-B1-01
400/230V, 3Ph+N+E, 60Hz
Page Title: Schematic Diagram (VFD Starter)

DWG. No. U25-2006-Q8479
Ref. No. Q8476
Job No. 3530105760
SAP Line 100
S/N 26-5760-0100-01

Item No. 10
QTY 01

=
+
Rev. No. 03
Page No. 24
Total Pages 56

The technical information contained in this document is the exclusive property of UTEC and can not be used or disclosed to third parties of any kind without its written consent.

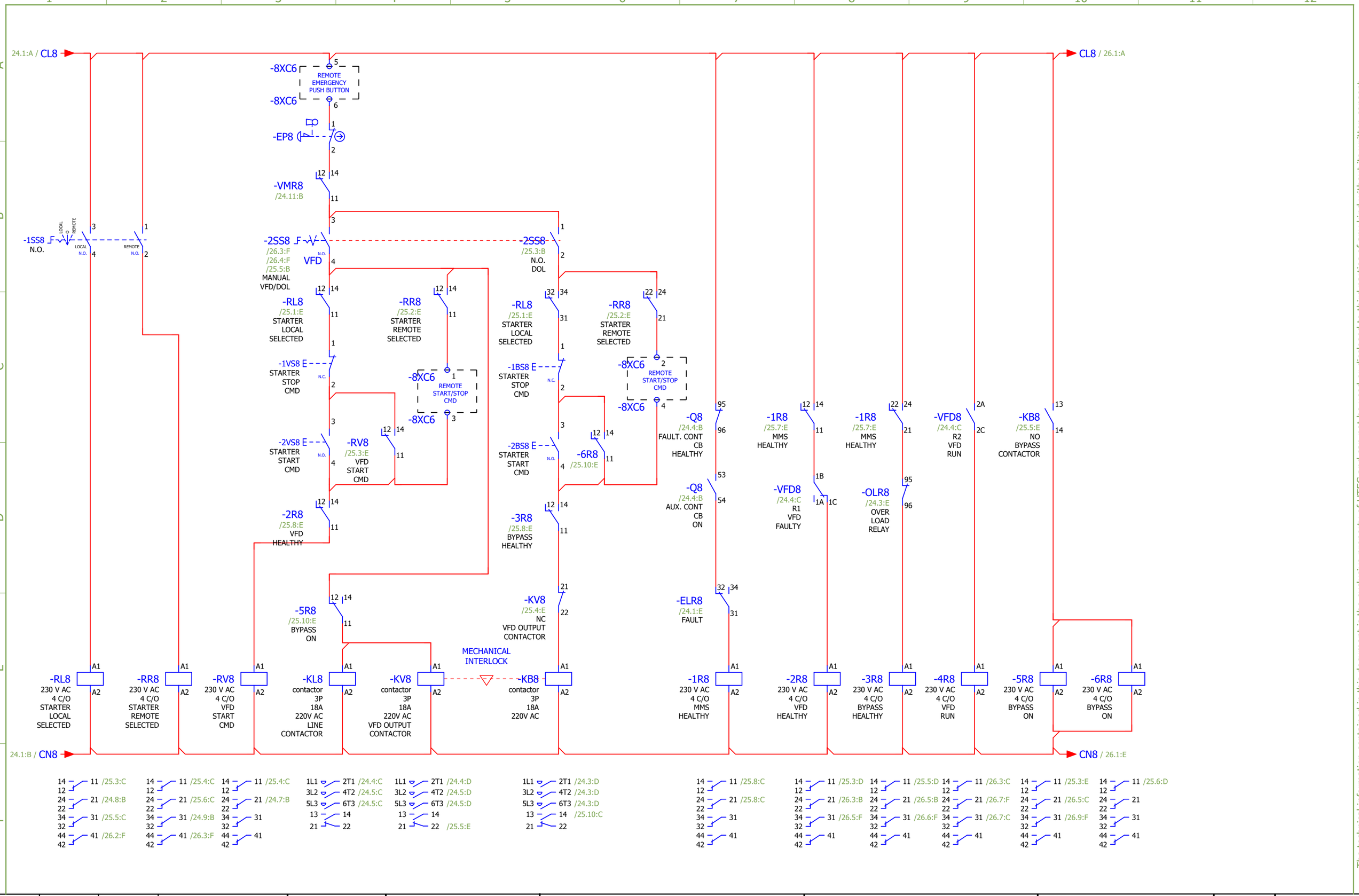

The technical information contained in this document is the exclusive property of UTEC and can not be used or disclosed to third parties of any kind without its written consent.

Rev. No.	Date	Name	Rev. Description
03	29-07-2026	STM	AS PER COMMENTS
02	18-06-2026	STM	A/P ETAP R-E. SLD & COMMENTS
01	19-04-2026	STM	AS PER UPD. SLD & COMMENTS
00	25-03-2026	STM	AS PER SLD

Checked: Ahmed Abukater
Approved: Mohammad Nadeem
Date: 29-07-2026

Customer Name: NPMANJV
Project Name: 219-The Address Hotel & Service Appartments

Item Name: ESMDB-H1-B1-01
400/230V, 3Ph+N+E, 60Hz
Page Title: Schematic Diagram (VFD Starter)

DWG. No. U25-2006-Q8479
Ref. No. Q8476
Job No. 3530105760
SAP Line 100
S/N 26-5760-0100-01

Item No. 10
QTY 01

Rev. No. 03
Page No. 25
Total Pages 56

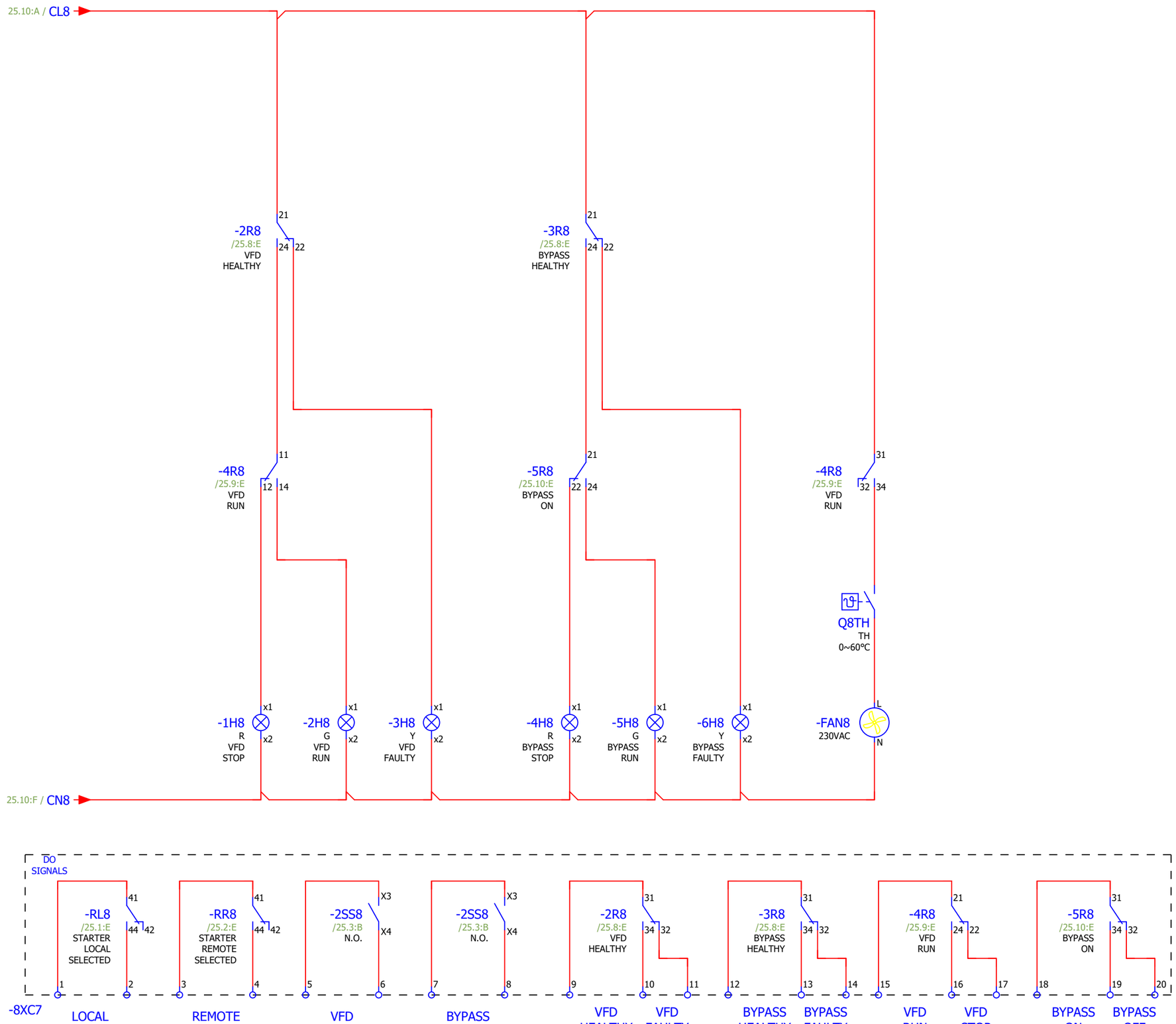

The technical information contained in this document is the exclusive property of UTEC and can not be used or disclosed to third parties of any kind without its written consent.

Rev. No.	Date	Name	Rev. Description
03	29-07-2026	STM	AS PER COMMENTS
02	18-06-2026	STM	A/P ETAP R-E. SLD & COMMENTS
01	19-04-2026	STM	AS PER UPD. SLD & COMMENTS
00	25-03-2026	STM	AS PER SLD

Checked: Ahmed Abukater
Approved: Mohammad Nadeem
Date: 29-07-2026

Customer Name: NPMANJV
Project Name: 219-The Address Hotel & Service Appartments

Item Name: ESMDB-H1-B1-01
400/230V, 3Ph+N+E, 60Hz
Page Title: Schematic Diagram (VFD Starter)

DWG. No. U25-2006-Q8479
Ref. No. Q8476
Job No. 3530105760
SAP Line 100
S/N 26-5760-0100-01

Item No. 10
QTY 01

=
+
Rev. No. 03
Page No. 26
Total Pages 56

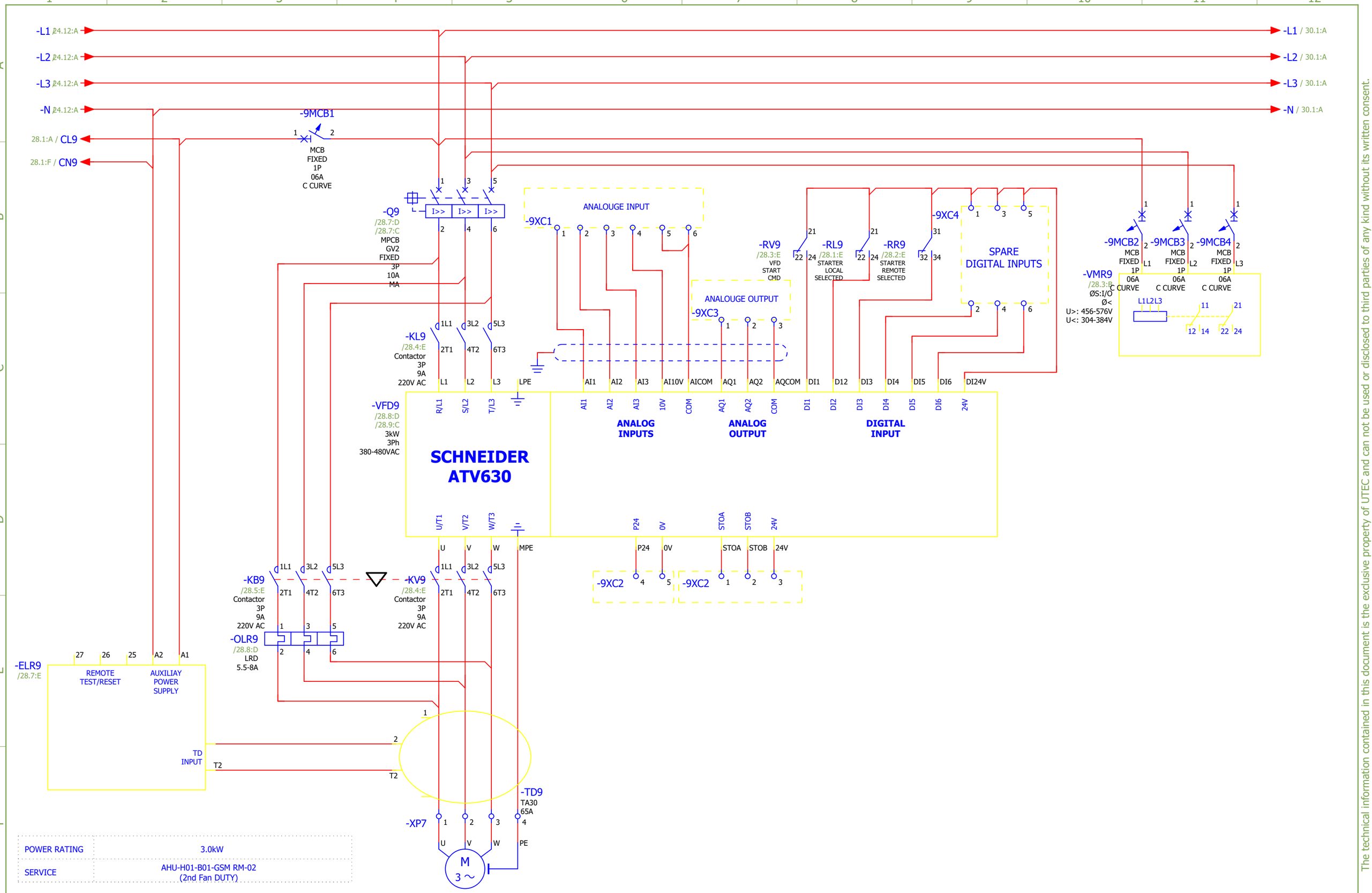

The technical information contained in this document is the exclusive property of UTEC and can not be used or disclosed to third parties of any kind without its written consent.

Rev. No.	Date	Name	Rev. Description
03	29-07-2026	STM	AS PER COMMENTS
02	18-06-2026	STM	A/P ETAP R-E. SLD & COMMENTS
01	19-04-2026	STM	AS PER UPD. SLD & COMMENTS
00	25-03-2026	STM	AS PER SLD

Checked: Ahmed Abukater
Approved: Mohammad Nadeem
Date: 29-07-2026

Customer Name: NPMANJV
Project Name: 219-The Address Hotel & Service Appartments

Item Name: ESMDB-H1-B1-01
400/230V, 3Ph+N+E, 60Hz
Page Title: Schematic Diagram (VFD Starter)

DWG. No. U25-2006-Q8479
Ref. No. Q8476
Job No. 3530105760
SAP Line 100
S/N 26-5760-0100-01

Item No. 10
QTY 01

=
+
Rev. No. 03
Page No. 27
Total Pages 56

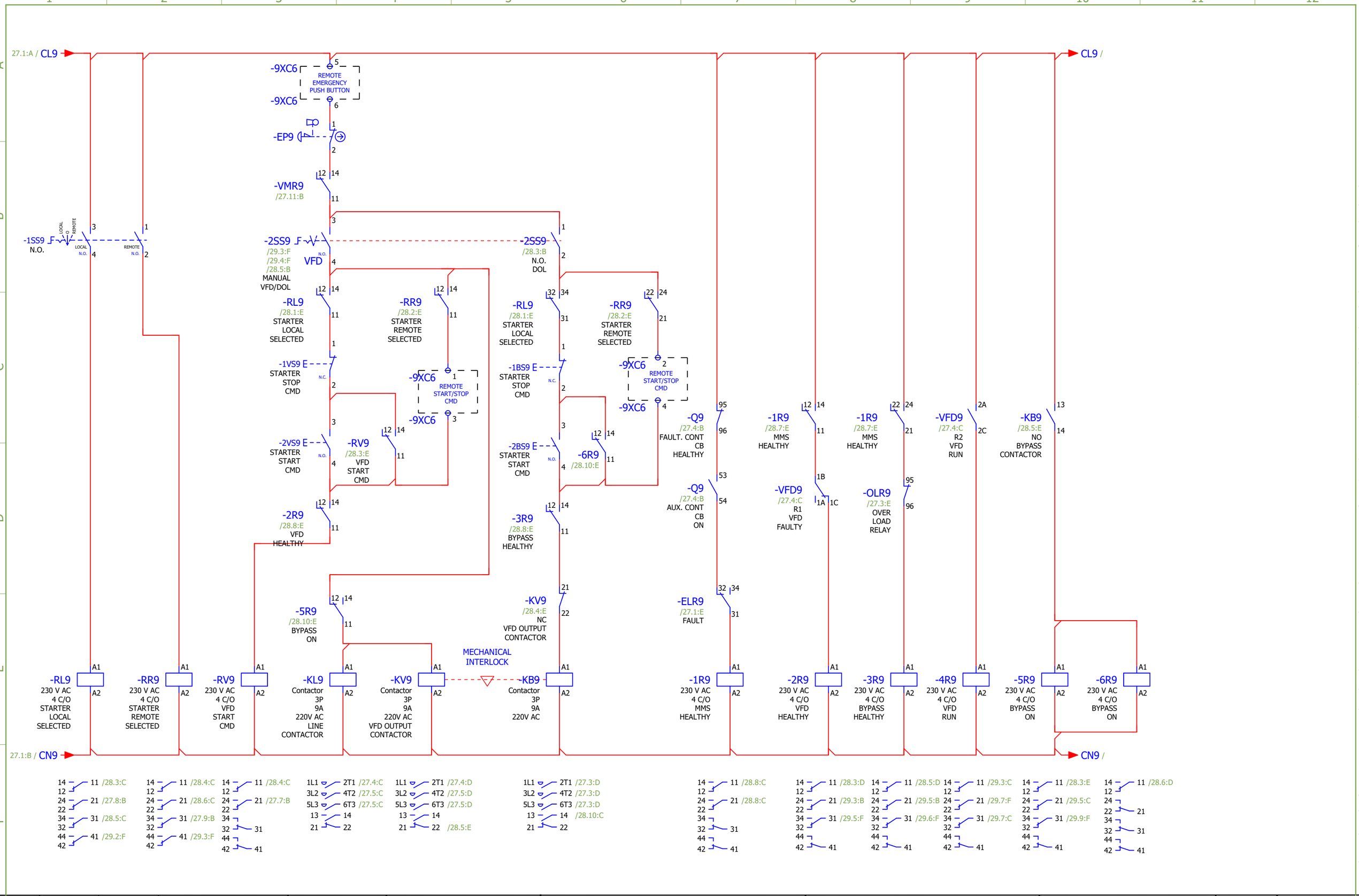

The technical information contained in this document is the exclusive property of UTEC and can not be used or disclosed to third parties of any kind without its written consent.

Rev. No.	Date	Name	Rev. Description
03	29-07-2026	STM	AS PER COMMENTS
02	18-06-2026	STM	A/P ETAP R-E. SLD & COMMENTS
01	19-04-2026	STM	AS PER UPD. SLD & COMMENTS
00	25-03-2026	STM	AS PER SLD

Checked: Ahmed Abukater
Approved: Mohammad Nadeem
Date: 29-07-2026

Customer Name: NPMANJV
Project Name: 219-The Address Hotel & Service Appartments

Item Name: ESMDB-H1-B1-01
400/230V, 3Ph+N+E, 60Hz
Page Title: Schematic Diagram (VFD Starter)

DWG. No. U25-2006-Q8479
Ref. No. Q8476
Job No. 3530105760
SAP Line 100
S/N 26-5760-0100-01

Item No. 10
QTY 01

Rev. No. 03
Page No. 28
Total Pages 56

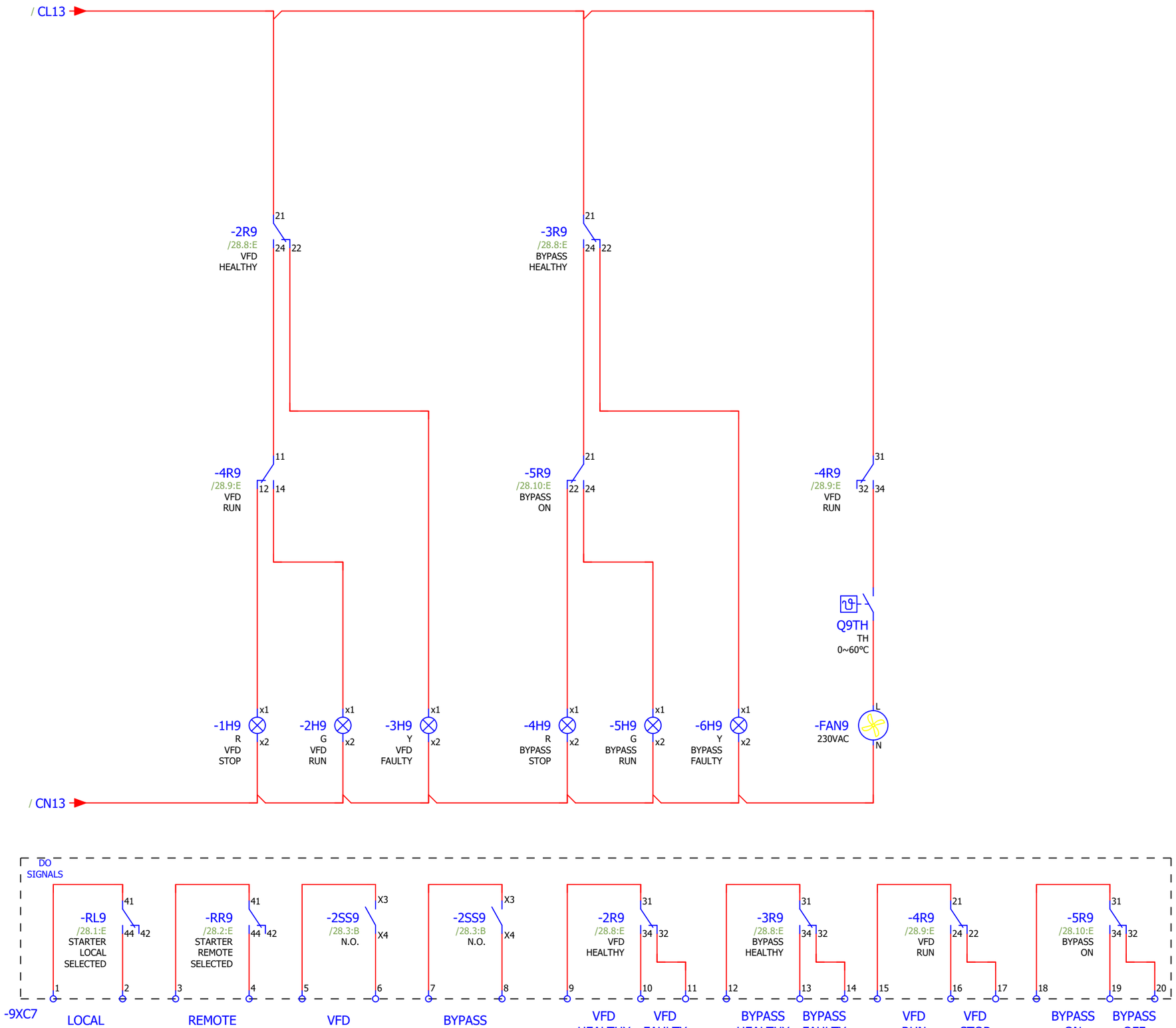

The technical information contained in this document is the exclusive property of UTEC and can not be used or disclosed to third parties of any kind without its written consent.

Rev. No.	Date	Name	Rev. Description
03	29-07-2026	STM	AS PER COMMENTS
02	18-06-2026	STM	A/P ETAP R-E. SLD & COMMENTS
01	19-04-2026	STM	AS PER UPD. SLD & COMMENTS
00	25-03-2026	STM	AS PER SLD

Checked: Ahmed Abukater
Approved: Mohammad Nadeem
Date: 29-07-2026

Customer Name: NPMANJV
Project Name: 219-The Address Hotel & Service Appartments

Item Name: ESMDB-H1-B1-01
400/230V, 3Ph+N+E, 60Hz
Page Title: Schematic Diagram (VFD Starter)

DWG. No. U25-2006-Q8479
Ref. No. Q8476
Job No. 3530105760
SAP Line 100
S/N 26-5760-0100-01

Item No. 10
QTY 01

=
+
Rev. No. 03
Page No. 29
Total Pages 56

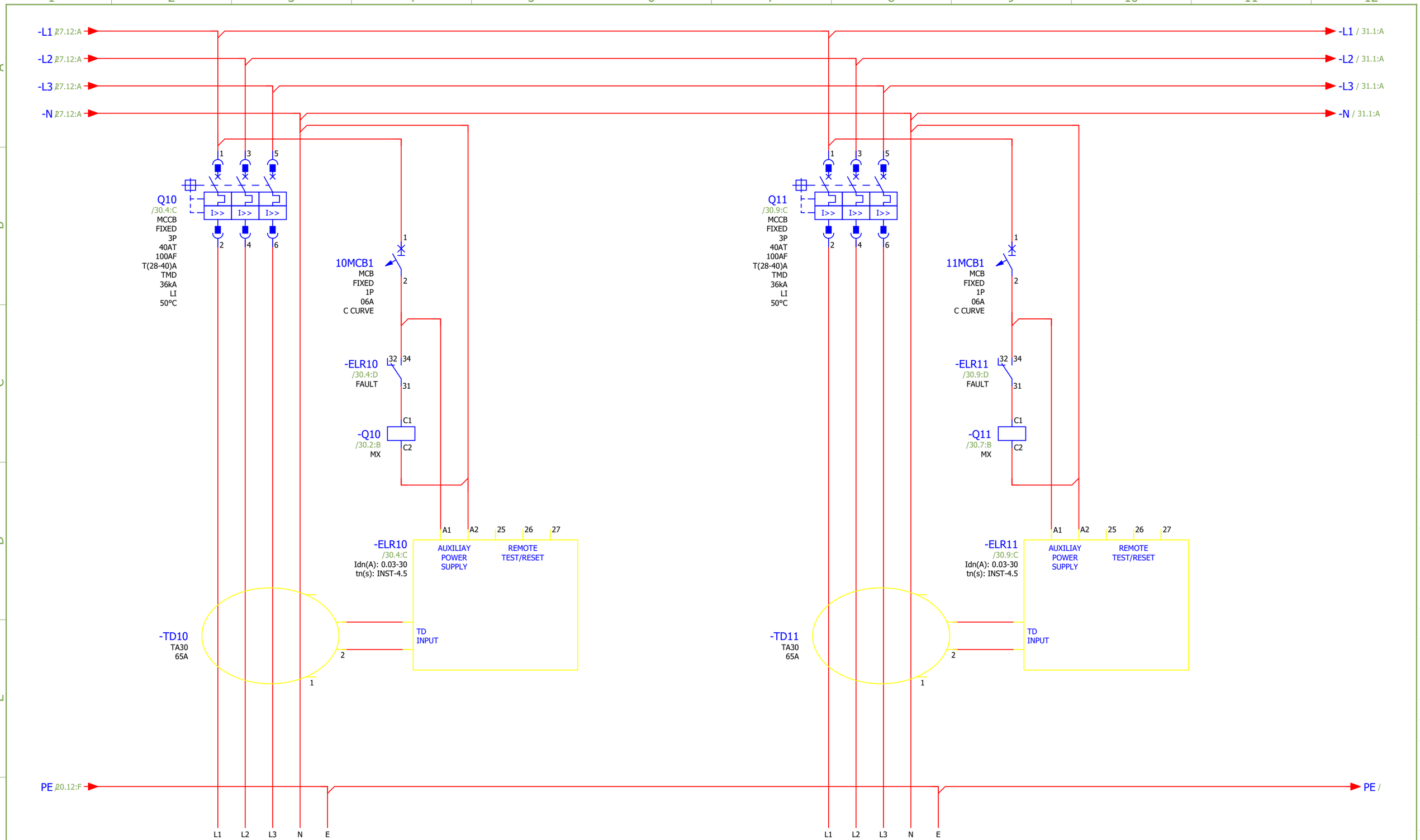

FEEDER DESCRIPTION	OU-H01-B01-02 (STANDBY)	OU-H01-B01-01 (STANDBY)
LOAD	40A	40A
Cable Size	3C 10mm² Cu./XLPE/SWA/LSZH + 1C 10mm² Cu./LSZH Y/G AS CPC	3C 10mm² Cu./XLPE/SWA/LSZH + 1C 10mm² Cu./LSZH Y/G AS CPC

The technical information contained in this document is the exclusive property of UTEC and can not be used or disclosed to third parties of any kind without its written consent.

Rev. No.	Date	Name	Rev. Description
03	29-07-2026	STM	AS PER COMMENTS
02	18-06-2026	STM	A/P ETAP R-E. SLD & COMMENTS
01	19-04-2026	STM	AS PER UPD. SLD & COMMENTS
00	25-03-2026	STM	AS PER SLD

Checked: Ahmed Abukater
Approved: Mohammad Nadeem
Date: 29-07-2026

Customer Name: NPMANJV
Project Name: 219-The Address Hotel & Service Appartments

Item Name: ESMDB-H1-B1-01
400/230V, 3Ph+N+E, 60Hz
Page Title: Schematic Diagram (Outgoing)

DWG. No. U25-2006-Q8479
Ref. No. Q8476
Job No. 3530105760
SAP Line 100
S/N 26-5760-0100-01

Item No. 10
QTY 01

=
+
Rev. No. 03
Page No. 30
Total Pages 56

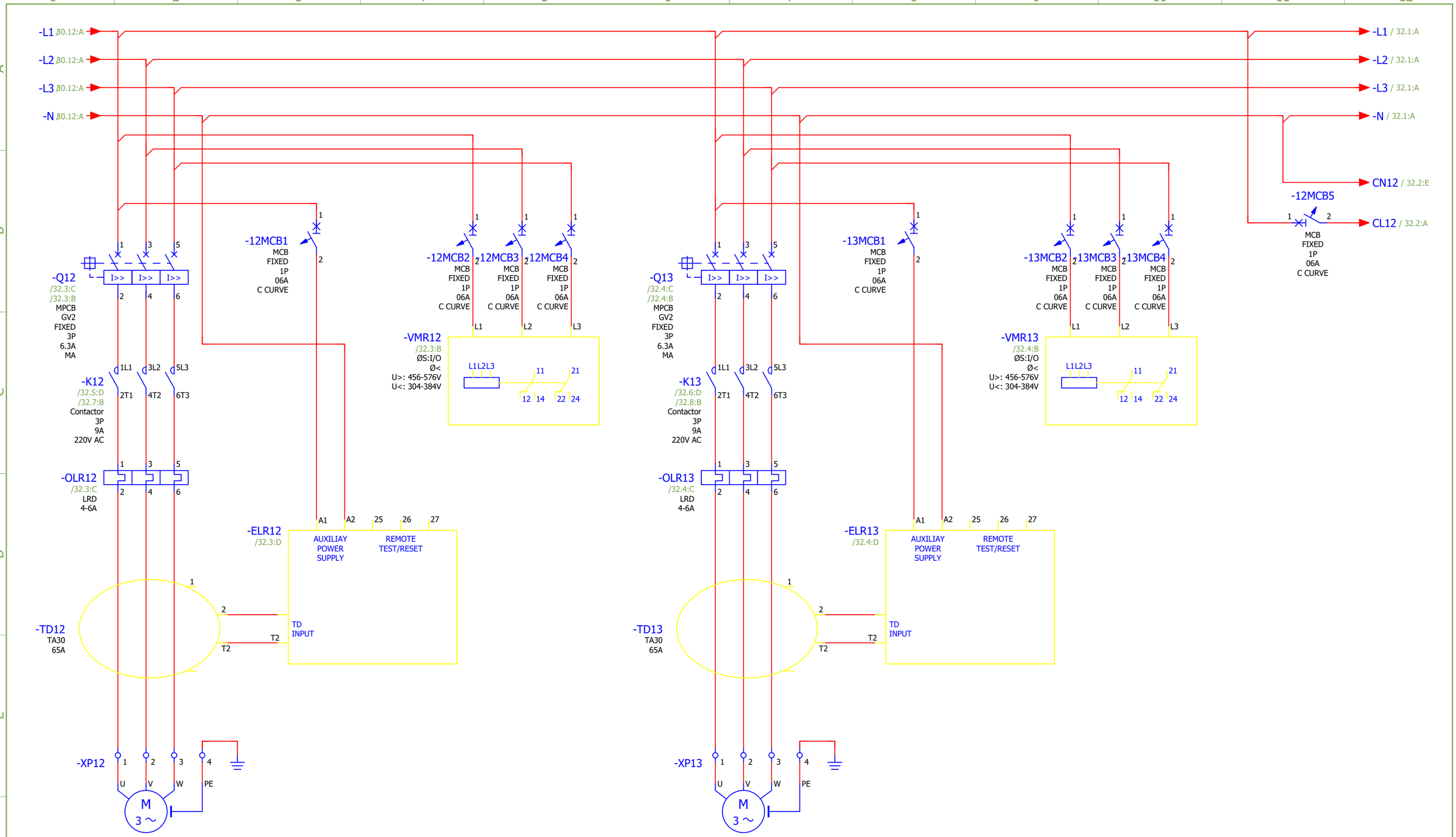

kW RATING	2.2 kW
SERVICE	AHU-H01-B01-GSM RM-02A (1ST FAN STANDBY)

kW RATING	2.2 kW
SERVICE	AHU-H01-B01-GSM RM-02A (2ND FAN STANDBY)

The technical information contained in this document is the exclusive property of UTEC and can not be used or disclosed to third parties of any kind without its written consent.

Rev. No.	Date	Name	Rev. Description
03	29-07-2026	STM	AS PER COMMENTS
02	18-06-2026	STM	A/P ETAP R-E. SLD & COMMENTS
01	19-04-2026	STM	AS PER UPD. SLD & COMMENTS
00	25-03-2026	STM	AS PER SLD

Checked: Ahmed Abukater
Approved: Mohammad Nadeem
Date: 29-07-2026

Customer Name: NPMANJV
Project Name: 219-The Address Hotel & Service Appartments

Item Name: ESMDB-H1-B1-01
400/230V, 3Ph+N+E, 60Hz
Page Title: Schematic Diagram (DOL Starter)

DWG. No. U25-2006-Q8479
Ref. No. Q8476
Job No. 3530105760
SAP Line 100
S/N 26-5760-0100-01

Item No. 10
QTY 01

Rev. No. 03
Page No. 31
Total Pages 56

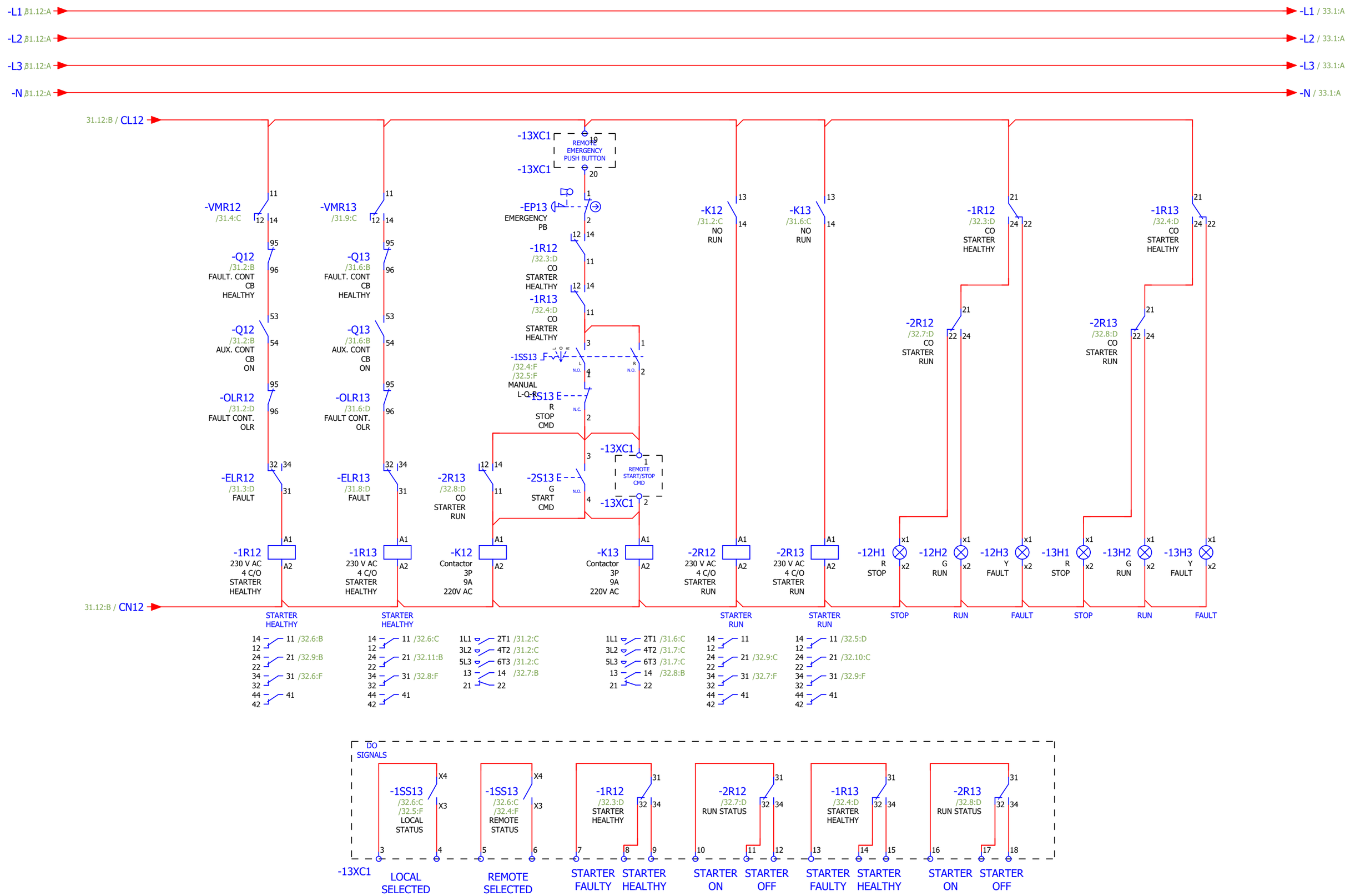

The technical information contained in this document is the exclusive property of UTEC and can not be used or disclosed to third parties of any kind without its written consent.

Rev. No.	Date	Name	Rev. Description
03	29-07-2026	STM	AS PER COMMENTS
02	18-06-2026	STM	A/P ETAP R-E. SLD & COMMENTS
01	19-04-2026	STM	AS PER UPD. SLD & COMMENTS
00	25-03-2026	STM	AS PER SLD

Checked: Ahmed Abukater
Approved: Mohammad Nadeem
Date: 29-07-2026

Customer Name: NPMANJV
Project Name: 219-The Address Hotel & Service Appartments

Item Name: ESMDB-H1-B1-01
400/230V, 3Ph+N+E, 60Hz
Page Title: Schematic Diagram (DOL Starter)

DWG. No. U25-2006-Q8479
Ref. No. Q8476
Job No. 3530105760
SAP Line 100
S/N 26-5760-0100-01

Item No. 10
QTY 01

=
+
Rev. No. 03
Page No. 32
Total Pages 56

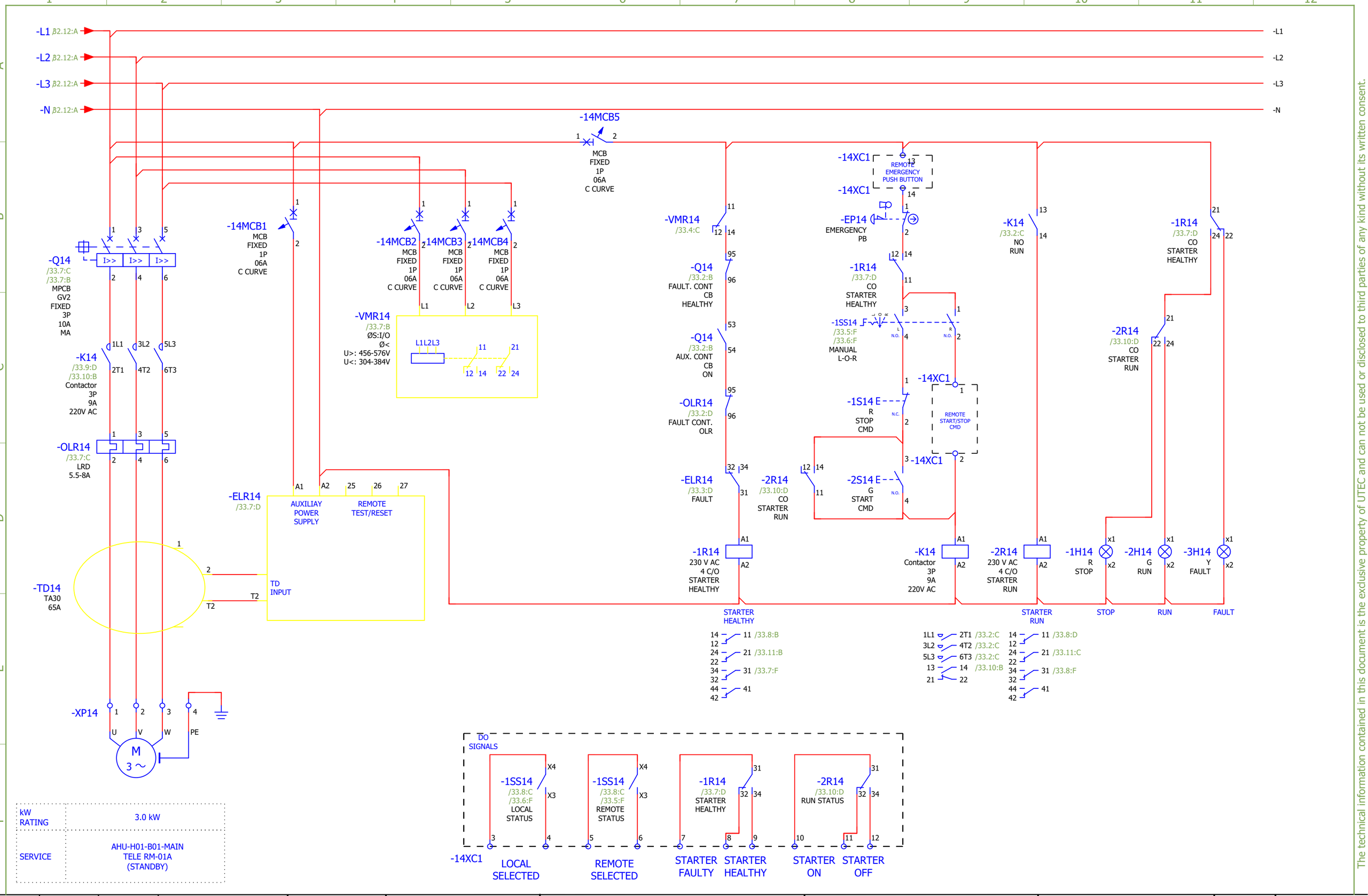

kW RATING	3.0 kW
SERVICE	AHU-H01-B01-MAIN TELE RM-01A (STANDBY)

Rev. No.	Date	Name	Rev. Description
03	29-07-2026	STM	AS PER COMMENTS
02	18-06-2026	STM	A/P ETAP R-E. SLD & COMMENTS
01	19-04-2026	STM	AS PER UPD. SLD & COMMENTS
00	25-03-2026	STM	AS PER SLD

Checked: Ahmed Abukater
Approved: Mohammad Nadeem
Date: 29-07-2026

Customer Name: NPMANJV
Project Name: 219-The Address Hotel & Service Appartments

Item Name: ESMDB-H1-B1-01
400/230V, 3Ph+N+E, 60Hz
Page Title: Schematic Diagram (DOL Starter)

DWG. No. U25-2006-Q8479
Ref. No. Q8476
Job No. 3530105760
SAP Line 100
S/N 26-5760-0100-01

Item No. 10
QTY 01

Rev. No. 03
Page No. 33
Total Pages 56

The technical information contained in this document is the exclusive property of UTEC and can not be used or disclosed to third parties of any kind without its written consent.

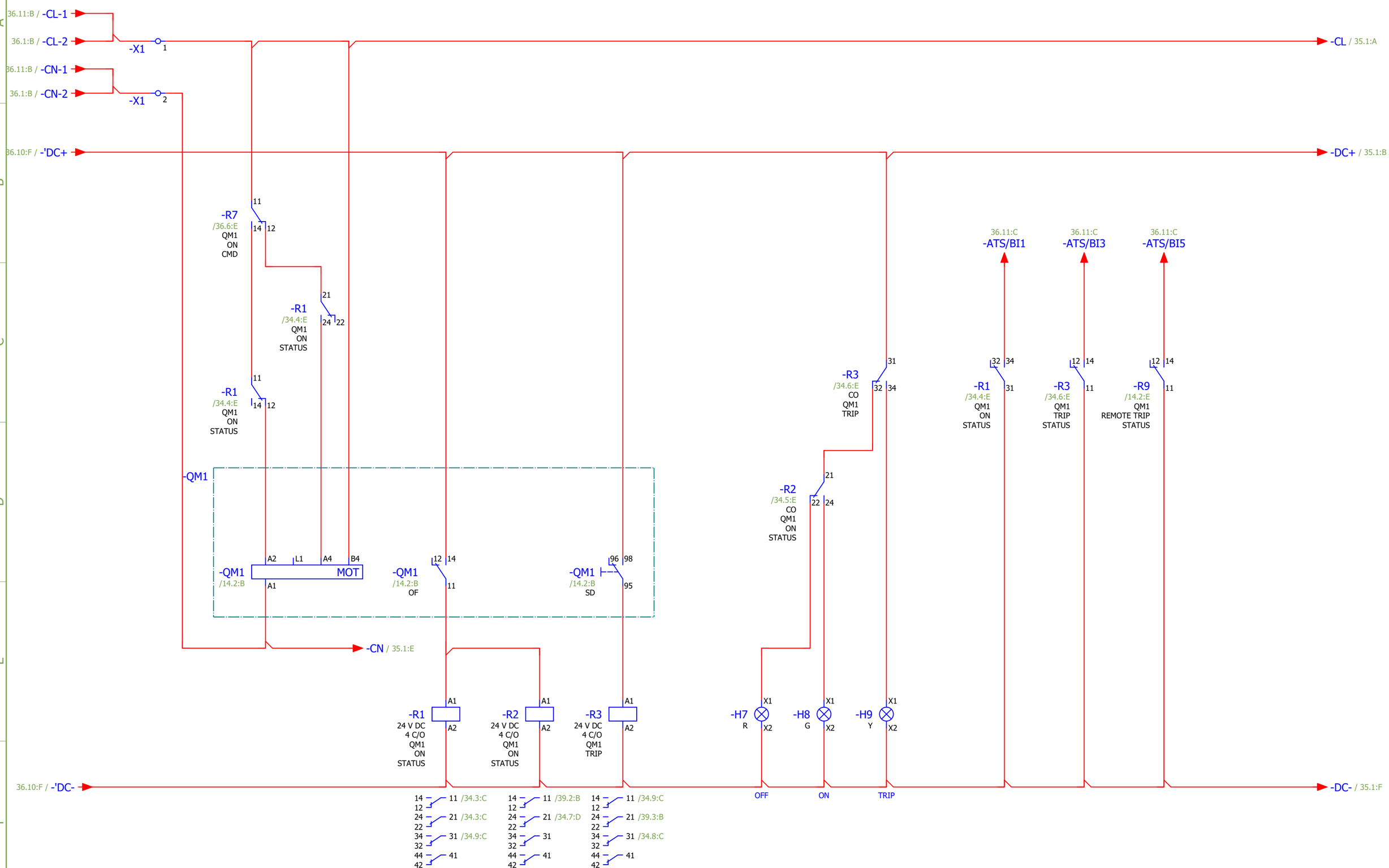

The technical information contained in this document is the exclusive property of UTEC and can not be used or disclosed to third parties of any kind without its written consent.

Rev. No.	Date	Name	Rev. Description
03	29-07-2026	STM	AS PER COMMENTS
02	18-06-2026	STM	A/P ETAP R-E. SLD & COMMENTS
01	19-04-2026	STM	AS PER UPD. SLD & COMMENTS
00	25-03-2026	STM	AS PER SLD

Checked: Ahmed Abukater
Approved: Mohammad Nadeem
Date: 29-07-2026

Customer Name: NPMANJV
Project Name: 219-The Address Hotel & Service Appartments

Item Name: ESMDB-H1-B1-01
400/230V, 3Ph+N+E, 60Hz
Page Title: Schematic Diagram (Control)

DWG. No. U25-2006-Q8479
Ref. No. Q8476
Job No. 3530105760
SAP Line 100
S/N 26-5760-0100-01

Item No. 10
QTY 01

=
+
Rev. No. 03
Page No. 34
Total Pages 56

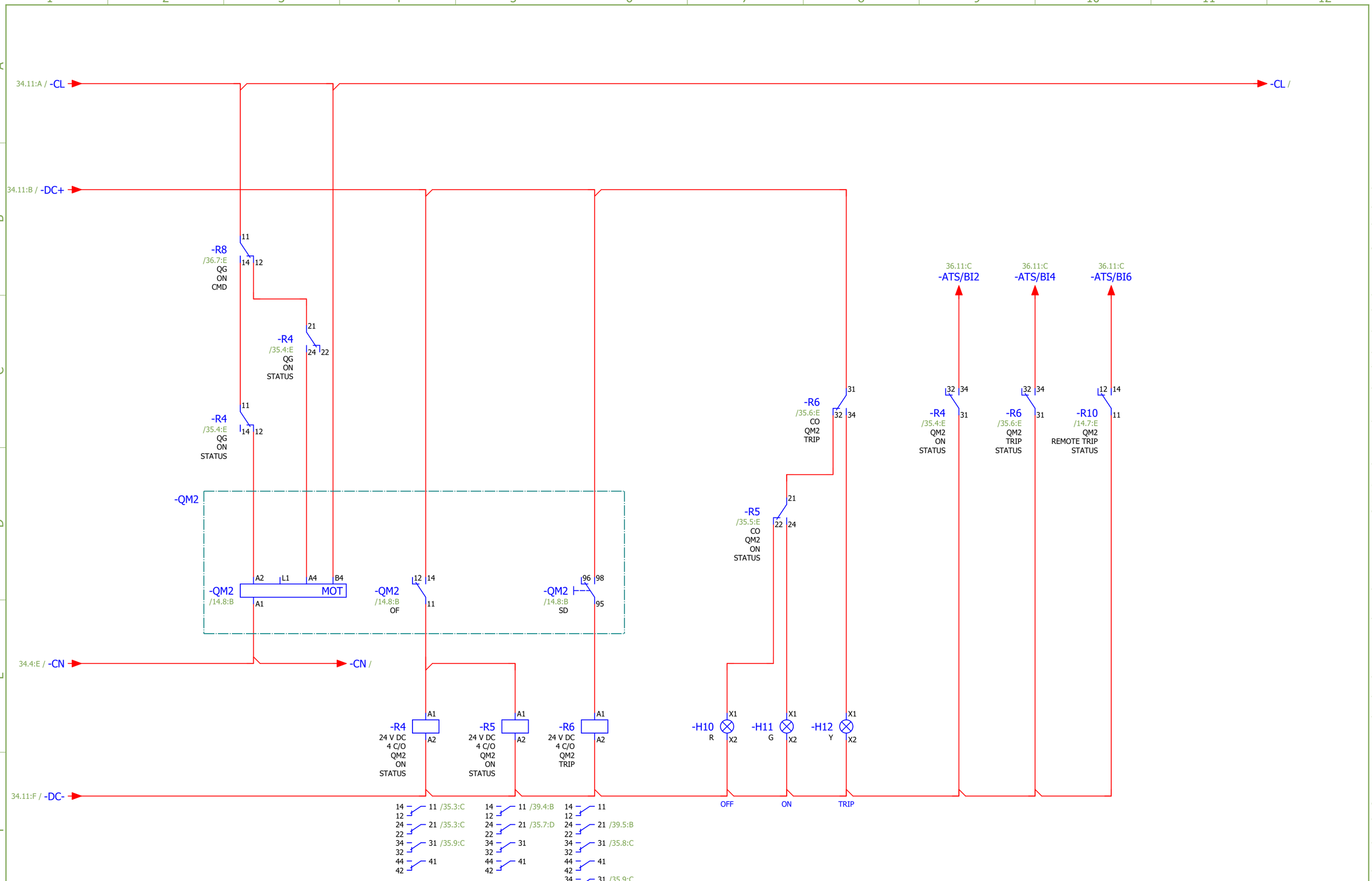

The technical information contained in this document is the exclusive property of UTEC and can not be used or disclosed to third parties of any kind without its written consent.

Rev. No.	Date	Name	Rev. Description
03	29-07-2026	STM	AS PER COMMENTS
02	18-06-2026	STM	A/P ETAP R-E. SLD & COMMENTS
01	19-04-2026	STM	AS PER UPD. SLD & COMMENTS
00	25-03-2026	STM	AS PER SLD

Checked: Ahmed Abukater
Approved: Mohammad Nadeem
Date: 29-07-2026

Customer Name: NPMANJV
Project Name: 219-The Address Hotel & Service Appartments

Item Name: ESMDB-H1-B1-01
400/230V, 3Ph+N+E, 60Hz
Page Title: Schematic Diagram (Control)

DWG. No. U25-2006-Q8479
Ref. No. Q8476
Job No. 3530105760
SAP Line 100
S/N 26-5760-0100-01

Item No. 10
QTY 01

=
+
Rev. No. 03
Page No. 35
Total Pages 56

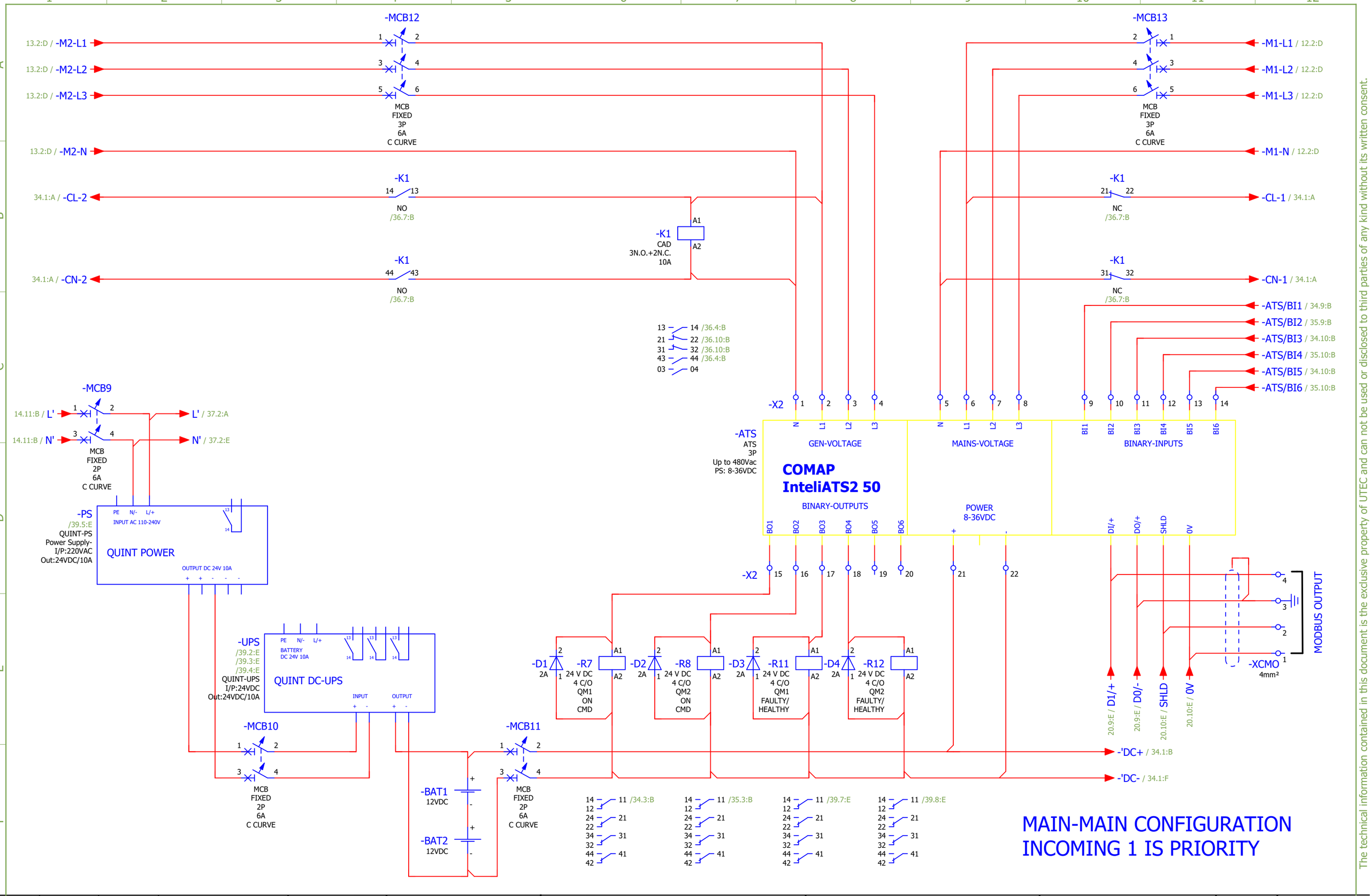

The technical information contained in this document is the exclusive property of UTEC and can not be used or disclosed to third parties of any kind without its written consent.

Rev. No.	Date	Name	Rev. Description
03	29-07-2026	STM	AS PER COMMENTS
02	18-06-2026	STM	A/P ETAP R-E. SLD & COMMENTS
01	19-04-2026	STM	AS PER UPD. SLD & COMMENTS
00	25-03-2026	STM	AS PER SLD

Checked: Ahmed Abukater
Approved: Mohammad Nadeem
Date: 29-07-2026

Customer Name: NPMANJV
Project Name: 219-The Address Hotel & Service Appartments

Item Name: ESMDB-H1-B1-01
400/230V, 3Ph+N+E, 60Hz
Page Title: Schematic Diagram (Control)

DWG. No. U25-2006-Q8479
Ref. No. Q8476
Job No. 3530105760
SAP Line 100
S/N 26-5760-0100-01

Item No. 10
QTY 01

Rev. No. 03
Page No. 36
Total Pages 56

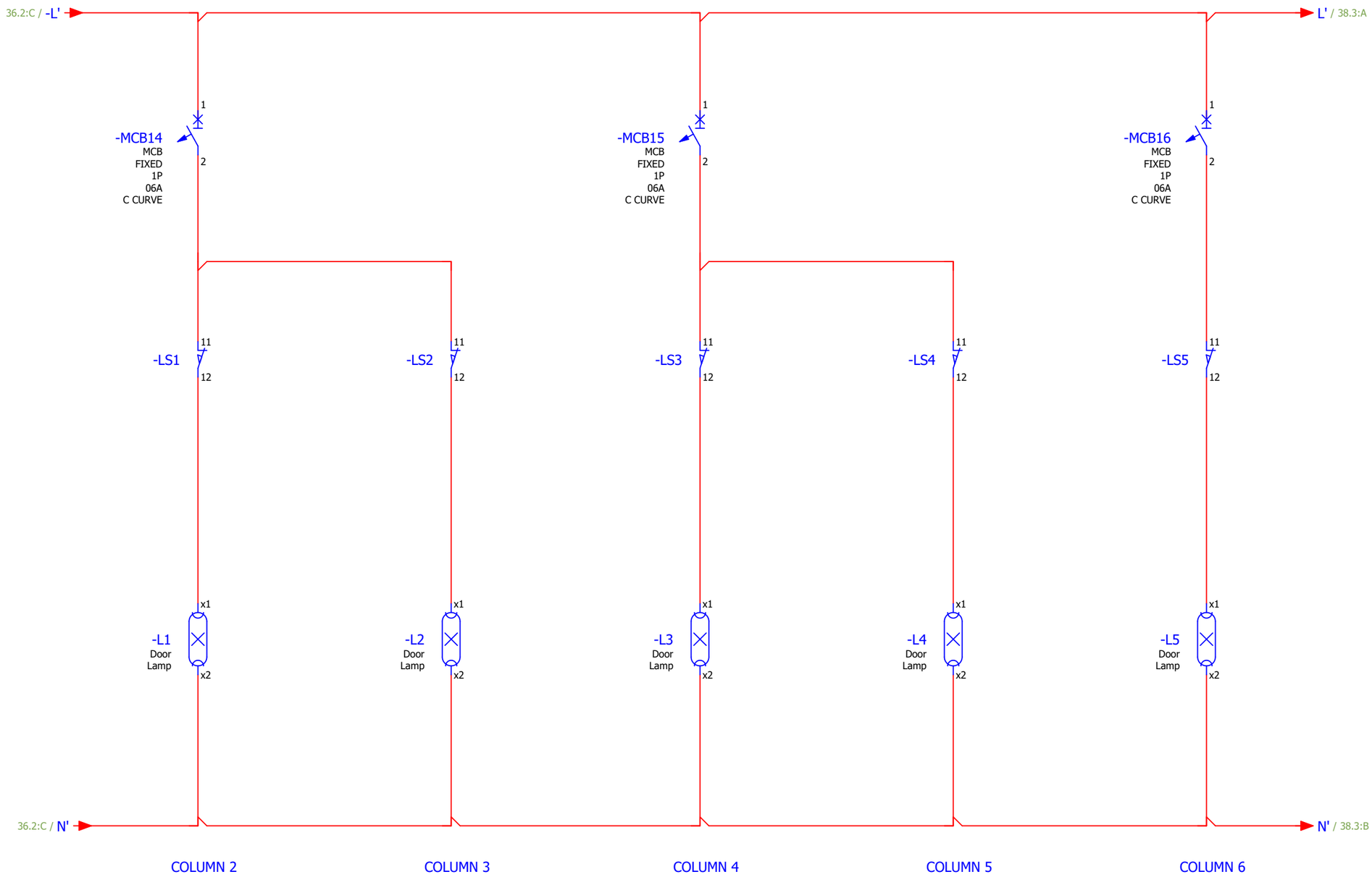

The technical information contained in this document is the exclusive property of UTEC and can not be used or disclosed to third parties of any kind without its written consent.

Rev. No.	Date	Name	Rev. Description
03	29-07-2026	STM	AS PER COMMENTS
02	18-06-2026	STM	A/P ETAP R-E. SLD & COMMENTS
01	19-04-2026	STM	AS PER UPD. SLD & COMMENTS
00	25-03-2026	STM	AS PER SLD

Checked: Ahmed Abukater
Approved: Mohammad Nadeem
Date: 29-07-2026

Customer Name: NPMANJV
Project Name: 219-The Address Hotel & Service Appartments

Item Name: ESMDB-H1-B1-01
400/230V, 3Ph+N+E, 60Hz
Page Title: Schematic Diagram (Door Limit Switch)

DWG. No. U25-2006-Q8479
Ref. No. Q8476
Job No. 3530105760
SAP Line 100
S/N 26-5760-0100-01

Item No. 10
QTY 01

=
+
Rev. No. 03
Page No. 37
Total Pages 56

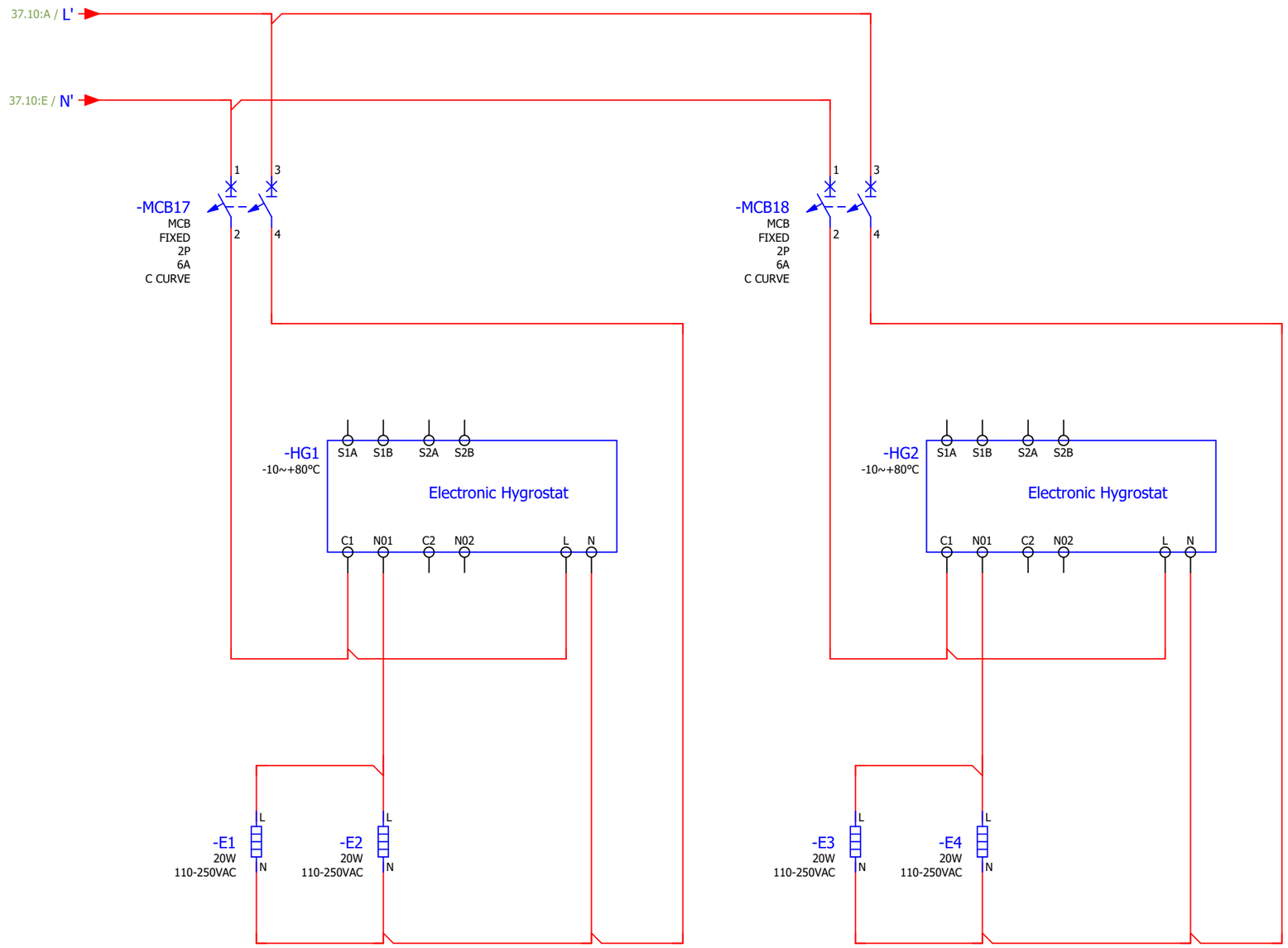

Rev. No.	Date	Name	Rev. Description
03	29-07-2026	STM	AS PER COMMENTS
02	18-06-2026	STM	A/P ETAP R-E. SLD & COMMENTS
01	19-04-2026	STM	AS PER UPD. SLD & COMMENTS
00	25-03-2026	STM	AS PER SLD

Checked: Ahmed Abukater
Approved: Mohammad Nadeem
Date: 29-07-2026

Customer Name: NPMANJV
Project Name: 219-The Address Hotel & Service Appartments

Item Name: ESMDB-H1-B1-01
400/230V, 3Ph+N+E, 60Hz
Page Title: Schematic Diagram (Heater)

DWG. No. U25-2006-Q8479
Ref. No. Q8476
Job No. 3530105760
SAP Line 100
S/N 26-5760-0100-01

Item No. 10
QTY 01

=
+
Rev. No. 03
Page No. 38
Total Pages 56

The technical information contained in this document is the exclusive property of UTEC and can not be used or disclosed to third parties of any kind without its written consent.

BMS STATUS SIGNALS

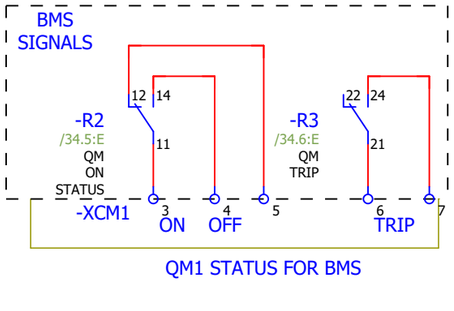

QM1 STATUS FOR BMS

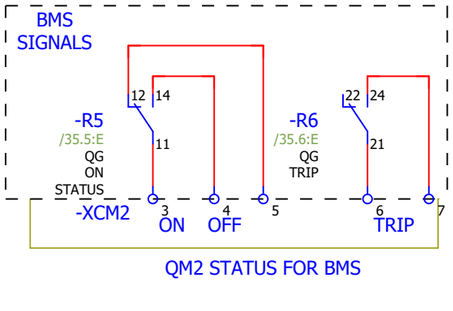

QM2 STATUS FOR BMS

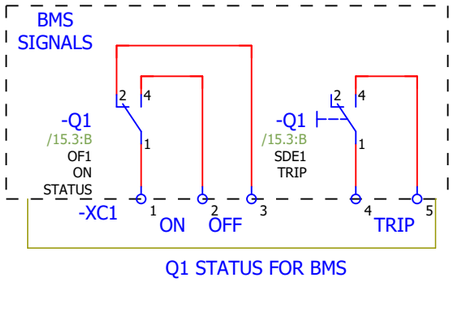

Q1 STATUS FOR BMS

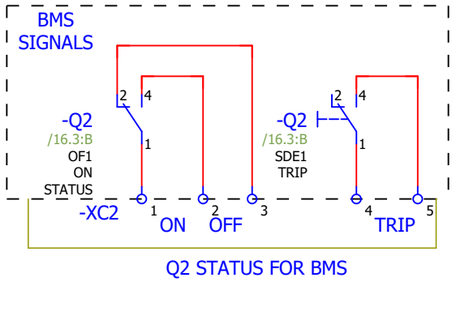

Q2 STATUS FOR BMS

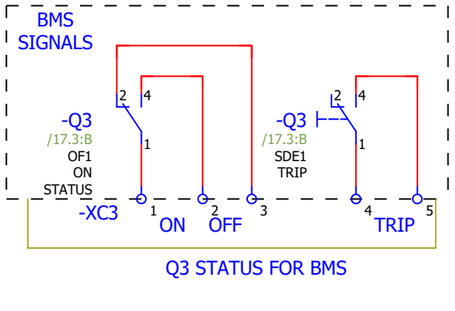

Q3 STATUS FOR BMS

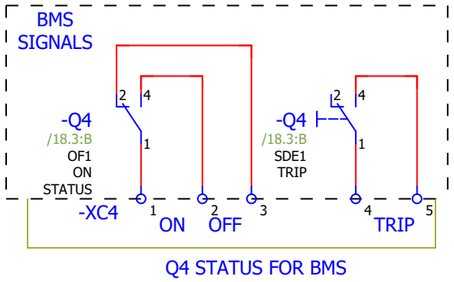

Q4 STATUS FOR BMS

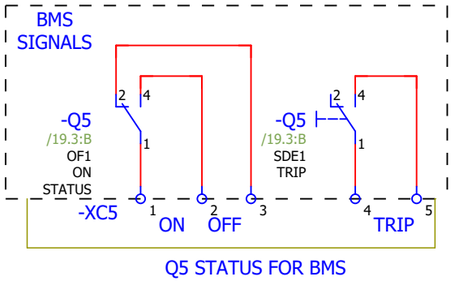

Q5 STATUS FOR BMS

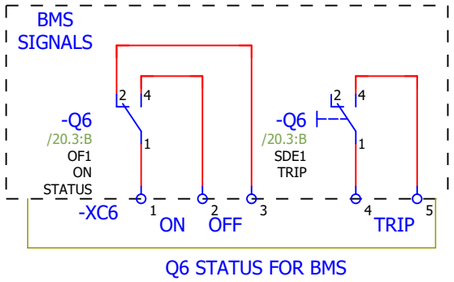

Q6 STATUS FOR BMS

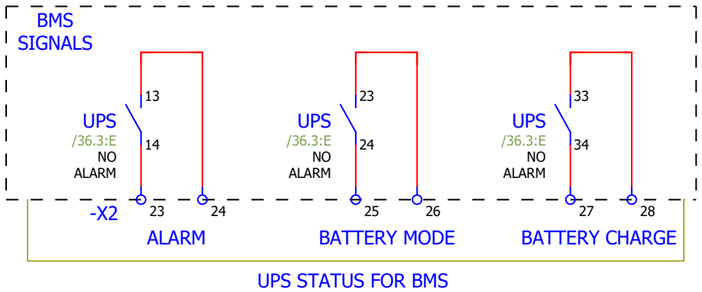

UPS STATUS FOR BMS

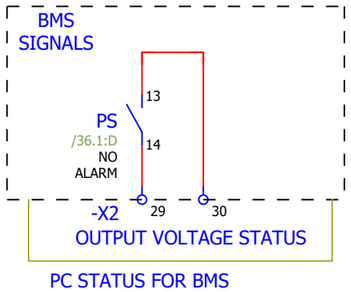

PC STATUS FOR BMS

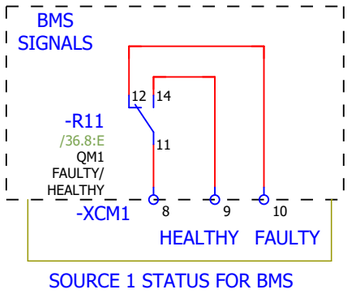

SOURCE 1 STATUS FOR BMS

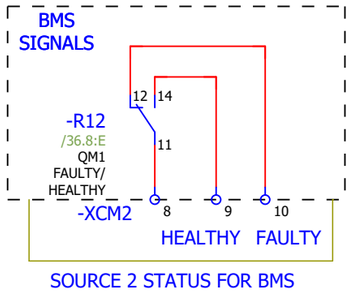

SOURCE 2 STATUS FOR BMS

The technical information contained in this document is the exclusive property of UTEC and can not be used or disclosed to third parties of any kind without its written consent.

Rev. No.	Date	Name	Rev. Description
03	29-07-2026	STM	AS PER COMMENTS
02	18-06-2026	STM	A/P ETAP R-E. SLD & COMMENTS
01	19-04-2026	STM	AS PER UPD. SLD & COMMENTS
00	25-03-2026	STM	AS PER SLD

Checked: Ahmed Abukater
Approved: Mohammad Nadeem
Date: 29-07-2026

Customer Name: NPMANJV
Project Name: 219-The Address Hotel & Service Appartments

Item Name: ESMDB-H1-B1-01
400/230V, 3Ph+N+E, 60Hz
Page Title: Schematic Diagram (BMS Signals)

DWG. No. U25-2006-Q8479
Ref. No. Q8476
Job No. 3530105760
SAP Line 100
S/N 26-5760-0100-01

Item No. 10
QTY 01

Rev. No. 03
Page No. 39
Total Pages 56

Terminal diagram

Strip: =ESMDB-H1-B1-01+-X1

External targets						Internal targets			
Target designation	Wiring	Jumper		SD	Jumper	Wiring	Target designation	Placement	Function text
-R7:11			1				-K1:22	/36.10:B	AC CONTROL CIRCUIT - LINE
-QM1:A1			2				-K1:32	/36.10:B	AC CONTROL CIRCUIT - NEUTRAL

Strip: =ESMDB-H1-B1-01+-X2

External targets						Internal targets			
Target designation	Wiring	Jumper		SD	Jumper	Wiring	Target designation	Placement	Function text
-ATS			1				-K1:A2	/36.7:B	ATS CONTROLLER - GENERATOR NEUTRAL
-ATS			2				-MCB12:2;-K1:A1	/36.4:A;/36.7:B	ATS CONTROLLER - GENERATOR L1
-ATS			3				-MCB12:4	/36.4:A	ATS CONTROLLER - GENERATOR L2
-ATS			4				-MCB12:6	/36.4:A	ATS CONTROLLER - GENERATOR L3
-ATS			5				-K1:31	/36.10:B	ATS CONTROLLER - MAIN NEUTRAL
-ATS			6				-MCB13:2;-K1:21	/36.11:A;/36.10:B	ATS CONTROLLER - MAIN L1
-ATS			7				-MCB13:4	/36.11:A	ATS CONTROLLER - MAIN L2
-ATS			8				-MCB13:6	/36.11:A	ATS CONTROLLER - MAIN L3
-ATS			9				-R1:34	/34.9:C	ATS CONTROLLER - BINARY INPUT-1 QM1 ON
-ATS			10				-R4:34	/35.9:C	ATS CONTROLLER - BINARY INPUT-2 QM2 ON
-ATS			11				-R3:14	/34.9:C	ATS CONTROLLER - BINARY INPUT-3 QM1 FAULT
-ATS			12				-R6:34	/35.9:C	ATS CONTROLLER - BINARY INPUT-4 QM2 FAULT
-ATS			13				-R9:14	/34.10:C	=
-ATS			14				-R10:14	/35.10:C	=
-R7:A1			15				-ATS	/36.8:C	ATS CONTROLLER - BINARY OUTPUT-1
-R8:A1			16				-ATS	/36.8:C	ATS CONTROLLER - BINARY OUTPUT-2
-R11:A1			17				-ATS	/36.8:C	ATS CONTROLLER - BINARY OUTPUT-3
-D4:2			18				-ATS	/36.8:C	ATS CONTROLLER - BINARY OUTPUT-4
			19				-ATS	/36.8:C	ATS CONTROLLER - BINARY OUTPUT-5
			20				-ATS	/36.8:C	ATS CONTROLLER - BINARY OUTPUT-6
-MCB11:2			21				-ATS	/36.8:C	ATS CONTROLLER - POWER INPUT (DC+)
-R12:A2			22				-ATS	/36.8:C	ATS CONTROLLER - POWER INPUT (DC-)
			23				-UPS:14	/39.2:E	UPS STATUS - ALARM - 1ST POINT
			24				-UPS:13	/39.2:E	UPS STATUS - ALARM -2ND POINT
			25				-UPS:24	/39.3:E	UPS STATUS - BATTERY MODE - 1ST POINT
			26				-UPS:23	/39.3:E	UPS STATUS - BATTERY MODE - 2ND POINT
			27				-UPS:34	/39.4:E	UPS STATUS - BATTERY CHARGE - 1ST POINT
			28				-UPS:33	/39.4:E	UPS STATUS - BATTERY CHARGE - 2ND POINT

The technical information contained in this document is the exclusive property of UTEC and can not be used or disclosed to third parties of any kind without its written consent.

Rev. No.	Date	Name	Rev. Description	Checked	Approved	Date

Customer Name: NPMANJV	Item Name: ESMDB-H1-B1-01	DWG. No. U25-2006-Q8479	Item No. 10	=	
		Ref. No. Q8476		+	
		Job No. 3530105760	QTY	Rev. No.	
Project Name: 219-The Address Hotel & Service Appartments	Page Title: Terminal diagram	SAP Line 100		Page No. 40	
		S/N 26-5760-0100-01		Total Pages 56	

Terminal diagram

Strip: =ESMDB-H1-B1-01+-X2

External targets				Internal targets				
Target designation	Wiring	Jumper	SD	Jumper	Wiring	Target designation	Placement	Function text
			29			-PS:14	/39.5:E	POWER SUPPLY O/P VOLTAGE STATUS - 1ST POINT
			30			-PS:13	/39.5:E	POWER SUPPLY O/P VOLTAGE STATUS - 2ND POINT

Strip: =ESMDB-H1-B1-01+-XC1

External targets				Internal targets				
Target designation	Wiring	Jumper	SD	Jumper	Wiring	Target designation	Placement	Function text
			1			-Q1:1	/39.6:B	QM - REMOTE INDICATION - STATUS - COM
			2			-Q1:4	/39.6:B	QM - REMOTE INDICATION - STATUS - ON
			3			-Q1:2	/39.6:B	QM - REMOTE INDICATION - STATUS - OFF
			4			-Q1:1	/39.7:B	QM - REMOTE INDICATION - TRIP - 1ST POINT
			5			-Q1:4	/39.7:B	QM - REMOTE INDICATION - TRIP - 2ND POINT

Strip: =ESMDB-H1-B1-01+-XC2

External targets				Internal targets				
Target designation	Wiring	Jumper	SD	Jumper	Wiring	Target designation	Placement	Function text
			1			-Q2:1	/39.8:B	QM - REMOTE INDICATION - STATUS - COM
			2			-Q2:4	/39.8:B	QM - REMOTE INDICATION - STATUS - ON
			3			-Q2:2	/39.8:B	QM - REMOTE INDICATION - STATUS - OFF
			4			-Q2:1	/39.9:B	QM - REMOTE INDICATION - TRIP - 1ST POINT
			5			-Q2:4	/39.9:B	QM - REMOTE INDICATION - TRIP - 2ND POINT

Strip: =ESMDB-H1-B1-01+-XC3

External targets				Internal targets				
Target designation	Wiring	Jumper	SD	Jumper	Wiring	Target designation	Placement	Function text
			1			-Q3:1	/39.11:B	QM - REMOTE INDICATION - STATUS - COM
			2			-Q3:4	/39.11:B	QM - REMOTE INDICATION - STATUS - ON
			3			-Q3:2	/39.11:B	QM - REMOTE INDICATION - STATUS - OFF
			4			-Q3:1	/39.12:B	QM - REMOTE INDICATION - TRIP - 1ST POINT
			5			-Q3:4	/39.12:B	QM - REMOTE INDICATION - TRIP - 2ND POINT

The technical information contained in this document is the exclusive property of UTEC and can not be used or disclosed to third parties of any kind without its written consent.

Terminal diagram

Strip: =ESMDB-H1-B1-01+-XC4

External targets						Internal targets			
Target designation	Wiring	Jumper		SD	Jumper	Wiring	Target designation	Placement	Function text
			1				-Q4:1	/39.1:C	QM - REMOTE INDICATION - STATUS - COM
			2				-Q4:4	/39.1:C	QM - REMOTE INDICATION - STATUS - ON
			3				-Q4:2	/39.1:C	QM - REMOTE INDICATION - STATUS - OFF
			4				-Q4:1	/39.2:C	QM - REMOTE INDICATION - TRIP - 1ST POINT
			5				-Q4:4	/39.2:C	QM - REMOTE INDICATION - TRIP - 2ND POINT

Strip: =ESMDB-H1-B1-01+-XC5

External targets						Internal targets			
Target designation	Wiring	Jumper		SD	Jumper	Wiring	Target designation	Placement	Function text
			1				-Q5:1	/39.4:C	QM - REMOTE INDICATION - STATUS - COM
			2				-Q5:4	/39.4:C	QM - REMOTE INDICATION - STATUS - ON
			3				-Q5:2	/39.4:C	QM - REMOTE INDICATION - STATUS - OFF
			4				-Q5:1	/39.5:C	QM - REMOTE INDICATION - TRIP - 1ST POINT
			5				-Q5:4	/39.5:C	QM - REMOTE INDICATION - TRIP - 2ND POINT

Strip: =ESMDB-H1-B1-01+-XC6

External targets						Internal targets			
Target designation	Wiring	Jumper		SD	Jumper	Wiring	Target designation	Placement	Function text
			1				-Q6:1	/39.6:C	QM - REMOTE INDICATION - STATUS - COM
			2				-Q6:4	/39.6:C	QM - REMOTE INDICATION - STATUS - ON
			3				-Q6:2	/39.6:C	QM - REMOTE INDICATION - STATUS - OFF
			4				-Q6:1	/39.7:C	QM - REMOTE INDICATION - TRIP - 1ST POINT
			5				-Q6:4	/39.7:C	QM - REMOTE INDICATION - TRIP - 2ND POINT

Strip: =ESMDB-H1-B1-01+-7XC1

External targets						Internal targets			
Target designation	Wiring	Jumper		SD	Jumper	Wiring	Target designation	Placement	Function text
			1				-VFD7:AI1	/21.4:C	SPEED CONTROL - ANALOUGE INPUT - 2nd POINT
			2				-VFD7:AI2	/21.4:C	ANALOUGE SENSOR INPUT - 2nd POINT
			3				-VFD7:AI3	/21.4:C	SPEED CONTROL - ANALOUGE INPUT - 2nd POINT
			4				-VFD7:AI10V	/21.4:C	=
			5						SPEED CONTROL - ANALOUGE INPUT COMMON - 1st POINT
			6				-VFD7:AICOM	/21.4:C	SPEED CONTROL - ANALOUGE INPUT FOR PTC - 1st POINT

The technical information contained in this document is the exclusive property of UTEC and can not be used or disclosed to third parties of any kind without its written consent.

Terminal diagram

Strip: =ESMDB-H1-B1-01+-7XC1

External targets				Internal targets				
Target designation	Wiring	Jumper	SD	Jumper	Wiring	Target designation	Placement	Function text

Strip: =ESMDB-H1-B1-01+-7XC2

External targets				Internal targets				
Target designation	Wiring	Jumper	SD	Jumper	Wiring	Target designation	Placement	Function text
			1			-VFD7:STOA	/21.4:C	SAFETY FUNCTION INPUT- 2nd POINT
			2			-VFD7:STOB	/21.4:C	=
			3			-VFD7:24V	/21.4:C	SAFETY FUNCTION INPUT COMMON - 1st POINT
			4			-VFD7:P24	/21.4:C	EXTERNAL 24V INPUT SUPPLY
			5			-VFD7:0V	/21.4:C	0V FOR P24

Strip: =ESMDB-H1-B1-01+-7XC3

External targets				Internal targets				
Target designation	Wiring	Jumper	SD	Jumper	Wiring	Target designation	Placement	Function text
			1			-VFD7:AQ1	/21.4:C	ANALOUGE OUTPUT-1 - 2nd POINT
			2			-VFD7:AQ2	/21.4:C	ANALOUGE OUTPUT-2 - 2nd POINT
			3			-VFD7:AQCOM	/21.4:C	ANALOUGE OUTPUT COMMON - 1st POINT

Strip: =ESMDB-H1-B1-01+-7XC4

External targets				Internal targets				
Target designation	Wiring	Jumper	SD	Jumper	Wiring	Target designation	Placement	Function text
			1	•		-RR7:31	/21.9:B	COMMON FOR DIGITAL INPUT
			2			-VFD7:DI4	/21.4:C	DIGITAL INPUT - SPARE - 2nd POINT
			3	•				COMMON FOR DIGITAL INPUT
			4			-VFD7:DI5	/21.4:C	DIGITAL INPUT - SPARE - 2nd POINT
			5	•		-VFD7:DI24V	/21.4:C	COMMON FOR DIGITAL INPUT
			6			-VFD7:DI6	/21.4:C	DIGITAL INPUT - SPARE - 2nd POINT

Strip: =ESMDB-H1-B1-01+-7XC6

External targets				Internal targets				
Target designation	Wiring	Jumper	SD	Jumper	Wiring	Target designation	Placement	Function text
			1			-RR7:11	/22.4:C	STARTER1 - VFD - START/STOP CMD - 1ST POINT

The technical information contained in this document is the exclusive property of UTEC and can not be used or disclosed to third parties of any kind without its written consent.

Rev. No.	Date	Name	Rev. Description

Checked

Approved

Date

Customer Name: NPMANJV

Project Name: 219-The Address Hotel & Service Appartments

Item Name: ESMDB-H1-B1-01

Page Title: Terminal diagram

DWG. No. U25-2006-Q8479
Ref. No. Q8476
Job No. 3530105760
SAP Line 100
S/N 26-5760-0100-01

Item No. 10

QTY

=
+
Rev. No.
Page No. 43
Total Pages 56

Terminal diagram

Strip: =ESMDB-H1-B1-01+-7XC6

External targets						Internal targets			
Target designation	Wiring	Jumper		SD	Jumper	Wiring	Target designation	Placement	Function text
			2				-RR7:21	/22.6:C	STARTER1 - BYPASS - START/STOP CMD - 1ST POINT
			5				-1SS7:1;-Q7:95	/22.1:B;/22.7:C	REMOTE EMERGENCY PUSH BUTTON - 1ST POINT
			3				-RV7:11	/22.4:C	STARTER1 - VFD - START/STOP CMD - 2ND POINT
			4				-6R7:11	/22.6:D	STARTER1 - BYPASS - START/STOP CMD - 2ND POINT
			6				-EP7:1	/22.3:A	REMOTE EMERGENCY PUSH BUTTON - 2ND POINT

Strip: =ESMDB-H1-B1-01+-7XC7

External targets						Internal targets			
Target designation	Wiring	Jumper		SD	Jumper	Wiring	Target designation	Placement	Function text
			1				-RL7:41	/23.2:F	STARTER - LOCAL SELECTED - 1ST POINT
			2				-RL7:44	/23.2:F	STARTER - LOCAL SELECTED - 2ND POINT
			3				-RR7:41	/23.3:F	STARTER - REMOTE SELECTED - 1ST POINT
			4				-RR7:44	/23.3:F	STARTER - REMOTE SELECTED - 2ND POINT
			5				-2SS7:X3	/23.3:F	VFD SELECTED - 1ST POINT
			6				-2SS7:X4	/23.3:F	VFD SELECTED - 2ND POINT
			7				-2SS7:X3	/23.4:F	BYPASS SELECTED - 1ST POINT
			8				-2SS7:X4	/23.4:F	BYPASS SELECTED - 2ND POINT
			9				-2R7:31	/23.5:F	VFD HEALTHY/FAULTY - COMMON POINT
			10				-2R7:34	/23.5:F	VFD HEALTHY
			11				-2R7:32	/23.5:F	VFD FAULTY
			12				-3R7:31	/23.6:F	BYPASS HEALTHY/FAULTY - COMMON POINT
			13				-3R7:34	/23.6:F	BYPASS HEALTHY
			14				-3R7:32	/23.6:F	BYPASS FAULTY
			15				-4R7:21	/23.7:F	VFD RUN/STOP - COMMON POINT
			16				-4R7:24	/23.7:F	VFD RUN
			17				-4R7:22	/23.7:F	VFD STOP
			18				-5R7:31	/23.9:F	BYPASS RUN/STOP - COMMON POINT
			19				-5R7:34	/23.9:F	BYPASS RUN
			20				-5R7:32	/23.9:F	BYPASS STOP

Strip: =ESMDB-H1-B1-01+-8XC1

External targets						Internal targets			
Target designation	Wiring	Jumper		SD	Jumper	Wiring	Target designation	Placement	Function text
			1				-VFD8:AI1	/24.4:C	SPEED CONTROL - ANALOUGE INPUT - 2nd POINT

The technical information contained in this document is the exclusive property of UTEC and can not be used or disclosed to third parties of any kind without its written consent.

Rev. No.	Date	Name	Rev. Description

Checked
Approved
Date

Customer Name: NPMANJV
Project Name: 219-The Address Hotel & Service Appartments
Item Name: ESMDB-H1-B1-01
Page Title: Terminal diagram
DWG. No. U25-2006-Q8479
Ref. No. Q8476
Job No. 3530105760
SAP Line 100
S/N 26-5760-0100-01
Item No. 10
QTY
=
+
Rev. No.
Page No. 44
Total Pages 56

Terminal diagram

Strip: =ESMDB-H1-B1-01+-8XC1

External targets				Internal targets				
Target designation	Wiring	Jumper	SD	Jumper	Wiring	Target designation	Placement	Function text
			2			-VFD8:AI2	/24.4:C	ANALOUGE SENSOR INPUT - 2nd POINT
			3			-VFD8:AI3	/24.4:C	SPEED CONTROL - ANALOUGE INPUT - 2nd POINT
			4			-VFD8:AI10V	/24.4:C	=
			5					SPEED CONTROL - ANALOUGE INPUT COMMON - 1st POINT
			6			-VFD8:AICOM	/24.4:C	SPEED CONTROL - ANALOUGE INPUT FOR PTC - 1st POINT

Strip: =ESMDB-H1-B1-01+-8XC2

External targets				Internal targets				
Target designation	Wiring	Jumper	SD	Jumper	Wiring	Target designation	Placement	Function text
			1			-VFD8:STOA	/24.4:C	SAFETY FUNCTION INPUT- 2nd POINT
			2			-VFD8:STOB	/24.4:C	=
			3			-VFD8:24V	/24.4:C	SAFETY FUNCTION INPUT COMMON - 1st POINT
			4			-VFD8:P24	/24.4:C	EXTERNAL 24V INPUT SUPPLY
			5			-VFD8:0V	/24.4:C	0V FOR P24

Strip: =ESMDB-H1-B1-01+-8XC3

External targets				Internal targets				
Target designation	Wiring	Jumper	SD	Jumper	Wiring	Target designation	Placement	Function text
			1			-VFD8:AQ1	/24.4:C	ANALOUGE OUTPUT-1 - 2nd POINT
			2			-VFD8:AQ2	/24.4:C	ANALOUGE OUTPUT-2 - 2nd POINT
			3			-VFD8:AQCOM	/24.4:C	ANALOUGE OUTPUT COMMON - 1st POINT

Strip: =ESMDB-H1-B1-01+-8XC4

External targets				Internal targets				
Target designation	Wiring	Jumper	SD	Jumper	Wiring	Target designation	Placement	Function text
			1			-RR8:31	/24.9:B	COMMON FOR DIGITAL INPUT
			2			-VFD8:DI4	/24.4:C	DIGITAL INPUT - SPARE - 2nd POINT
			3					COMMON FOR DIGITAL INPUT
			4			-VFD8:DI5	/24.4:C	DIGITAL INPUT - SPARE - 2nd POINT
			5			-VFD8:DI24V	/24.4:C	COMMON FOR DIGITAL INPUT
			6			-VFD8:DI6	/24.4:C	DIGITAL INPUT - SPARE - 2nd POINT

The technical information contained in this document is the exclusive property of UTEC and can not be used or disclosed to third parties of any kind without its written consent.

Terminal diagram

Strip: =ESMDB-H1-B1-01+-8XC4

External targets				Internal targets				
Target designation	Wiring	Jumper	SD	Jumper	Wiring	Target designation	Placement	Function text

Strip: =ESMDB-H1-B1-01+-8XC6

External targets				Internal targets				
Target designation	Wiring	Jumper	SD	Jumper	Wiring	Target designation	Placement	Function text
			1			-RR8:11	/25.4:C	STARTER1 - VFD - START/STOP CMD - 1ST POINT
			2			-RR8:21	/25.6:C	STARTER1 - BYPASS - START/STOP CMD - 1ST POINT
			5			-1SS8:1;-Q8:95	/25.1:B;/25.7:C	REMOTE EMERGENCY PUSH BUTTON - 1ST POINT
			3			-RV8:11	/25.4:C	STARTER1 - VFD - START/STOP CMD - 2ND POINT
			4			-6R8:11	/25.6:D	STARTER1 - BYPASS - START/STOP CMD - 2ND POINT
			6			-EP8:1	/25.3:A	REMOTE EMERGENCY PUSH BUTTON - 2ND POINT

Strip: =ESMDB-H1-B1-01+-8XC7

External targets				Internal targets				
Target designation	Wiring	Jumper	SD	Jumper	Wiring	Target designation	Placement	Function text
			1			-RL8:41	/26.2:F	STARTER - LOCAL SELECTED - 1ST POINT
			2			-RL8:44	/26.2:F	STARTER - LOCAL SELECTED - 2ND POINT
			3			-RR8:41	/26.3:F	STARTER - REMOTE SELECTED - 1ST POINT
			4			-RR8:44	/26.3:F	STARTER - REMOTE SELECTED - 2ND POINT
			5			-2SS8:X3	/26.3:F	VFD SELECTED - 1ST POINT
			6			-2SS8:X4	/26.3:F	VFD SELECTED - 2ND POINT
			7			-2SS8:X3	/26.4:F	BYPASS SELECTED - 1ST POINT
			8			-2SS8:X4	/26.4:F	BYPASS SELECTED - 2ND POINT
			9			-2R8:31	/26.5:F	VFD HEALTHY/FAULTY - COMMON POINT
			10			-2R8:34	/26.5:F	VFD HEALTHY
			11			-2R8:32	/26.5:F	VFD FAULTY
			12			-3R8:31	/26.6:F	BYPASS HEALTHY/FAULTY - COMMON POINT
			13			-3R8:34	/26.6:F	BYPASS HEALTHY
			14			-3R8:32	/26.6:F	BYPASS FAULTY
			15			-4R8:21	/26.7:F	VFD RUN/STOP - COMMON POINT
			16			-4R8:24	/26.7:F	VFD RUN
			17			-4R8:22	/26.7:F	VFD STOP
			18			-5R8:31	/26.9:F	BYPASS RUN/STOP - COMMON POINT
			19			-5R8:34	/26.9:F	BYPASS RUN
			20			-5R8:32	/26.9:F	BYPASS STOP

The technical information contained in this document is the exclusive property of UTEC and can not be used or disclosed to third parties of any kind without its written consent.

Terminal diagram

Strip: =ESMDB-H1-B1-01+-8XC7

External targets				Internal targets				
Target designation	Wiring	Jumper	SD	Jumper	Wiring	Target designation	Placement	Function text

Strip: =ESMDB-H1-B1-01+-9XC1

External targets				Internal targets				
Target designation	Wiring	Jumper	SD	Jumper	Wiring	Target designation	Placement	Function text
			1			-VFD9:AI1	/27.4:C	SPEED CONTROL - ANALOUGE INPUT - 2nd POINT
			2			-VFD9:AI2	/27.4:C	ANALOUGE SENSOR INPUT - 2nd POINT
			3			-VFD9:AI3	/27.4:C	SPEED CONTROL - ANALOUGE INPUT - 2nd POINT
			4			-VFD9:AI10V	/27.4:C	=
			5					SPEED CONTROL - ANALOUGE INPUT COMMON - 1st POINT
			6			-VFD9:AICOM	/27.4:C	SPEED CONTROL - ANALOUGE INPUT FOR PTC - 1st POINT

Strip: =ESMDB-H1-B1-01+-9XC2

External targets				Internal targets				
Target designation	Wiring	Jumper	SD	Jumper	Wiring	Target designation	Placement	Function text
			1			-VFD9:STOA	/27.4:C	SAFETY FUNCTION INPUT- 2nd POINT
			2			-VFD9:STOB	/27.4:C	=
			3			-VFD9:24V	/27.4:C	SAFETY FUNCTION INPUT COMMON - 1st POINT
			4			-VFD9:P24	/27.4:C	EXTERNAL 24V INPUT SUPPLY
			5			-VFD9:0V	/27.4:C	0V FOR P24

Strip: =ESMDB-H1-B1-01+-9XC3

External targets				Internal targets				
Target designation	Wiring	Jumper	SD	Jumper	Wiring	Target designation	Placement	Function text
			1			-VFD9:AQ1	/27.4:C	ANALOUGE OUTPUT-1 - 2nd POINT
			2			-VFD9:AQ2	/27.4:C	ANALOUGE OUTPUT-2 - 2nd POINT
			3			-VFD9:AQCOM	/27.4:C	ANALOUGE OUTPUT COMMON - 1st POINT

Strip: =ESMDB-H1-B1-01+-9XC4

External targets				Internal targets				
Target designation	Wiring	Jumper	SD	Jumper	Wiring	Target designation	Placement	Function text
			1			-RR9:31	/27.9:B	COMMON FOR DIGITAL INPUT

The technical information contained in this document is the exclusive property of UTEC and can not be used or disclosed to third parties of any kind without its written consent.

Rev. No.	Date	Name	Rev. Description

Checked

Approved

Date

Customer Name: NPMANJV

Project Name: 219-The Address Hotel & Service Appartments

Item Name: ESMDB-H1-B1-01

Page Title: Terminal diagram

DWG. No. U25-2006-Q8479
Ref. No. Q8476
Job No. 3530105760
SAP Line 100
S/N 26-5760-0100-01

Item No. 10

QTY

=
+
Rev. No.
Page No. 47
Total Pages 56

Terminal diagram

Strip: =ESMDB-H1-B1-01+-9XC4

External targets					Internal targets			
Target designation	Wiring	Jumper	SD	Jumper	Wiring	Target designation	Placement	Function text
			2			-VFD9:DI4	/27.4:C	DIGITAL INPUT - SPARE - 2nd POINT
			3					COMMON FOR DIGITAL INPUT
			4			-VFD9:DI5	/27.4:C	DIGITAL INPUT - SPARE - 2nd POINT
			5			-VFD9:DI24V	/27.4:C	COMMON FOR DIGITAL INPUT
			6			-VFD9:DI6	/27.4:C	DIGITAL INPUT - SPARE - 2nd POINT

Strip: =ESMDB-H1-B1-01+-9XC6

External targets					Internal targets			
Target designation	Wiring	Jumper	SD	Jumper	Wiring	Target designation	Placement	Function text
			1			-RR9:11	/28.4:C	STARTER1 - VFD - START/STOP CMD - 1ST POINT
			2			-RR9:21	/28.6:C	STARTER1 - BYPASS - START/STOP CMD - 1ST POINT
			5			-1SS9:1;-Q9:95	/28.1:B;/28.7:C	=
			3			-RV9:11	/28.4:C	STARTER1 - VFD - START/STOP CMD - 2ND POINT
			4			-6R9:11	/28.6:D	STARTER1 - BYPASS - START/STOP CMD - 2ND POINT
			6			-EP9:1	/28.3:A	=

Strip: =ESMDB-H1-B1-01+-9XC7

External targets					Internal targets			
Target designation	Wiring	Jumper	SD	Jumper	Wiring	Target designation	Placement	Function text
			1			-RL9:41	/29.2:F	STARTER - LOCAL SELECTED - 1ST POINT
			2			-RL9:44	/29.2:F	STARTER - LOCAL SELECTED - 2ND POINT
			3			-RR9:41	/29.3:F	STARTER - REMOTE SELECTED - 1ST POINT
			4			-RR9:44	/29.3:F	STARTER - REMOTE SELECTED - 2ND POINT
			5			-2SS9:X3	/29.3:F	VFD SELECTED - 1ST POINT
			6			-2SS9:X4	/29.3:F	VFD SELECTED - 2ND POINT
			7			-2SS9:X3	/29.4:F	BYPASS SELECTED - 1ST POINT
			8			-2SS9:X4	/29.4:F	BYPASS SELECTED - 2ND POINT
			9			-2R9:31	/29.5:F	VFD HEALTHY/FAULTY - COMMON POINT
			10			-2R9:34	/29.5:F	VFD HEALTHY
			11			-2R9:32	/29.5:F	VFD FAULTY
			12			-3R9:31	/29.6:F	BYPASS HEALTHY/FAULTY - COMMON POINT
			13			-3R9:34	/29.6:F	BYPASS HEALTHY
			14			-3R9:32	/29.6:F	BYPASS FAULTY
			15			-4R9:21	/29.7:F	VFD RUN/STOP - COMMON POINT

The technical information contained in this document is the exclusive property of UTEC and can not be used or disclosed to third parties of any kind without its written consent.

Rev. No.	Date	Name	Rev. Description

Checked
Approved
Date

Customer Name: NPMANJV
Project Name: 219-The Address Hotel & Service Appartments
Item Name: ESMDB-H1-B1-01
Page Title: Terminal diagram

DWG. No. U25-2006-Q8479
Ref. No. Q8476
Job No. 3530105760
SAP Line 100
S/N 26-5760-0100-01

Item No. 10
QTY

=
+
Rev. No.
Page No. 48
Total Pages 56

Terminal diagram

Strip: =ESMDB-H1-B1-01+-9XC7

External targets				Internal targets			
Target designation	Wiring	Jumper	SD	Jumper	Wiring	Target designation	Placement	Function text
			16			-4R9:24	/29.7:F	VFD RUN
			17			-4R9:22	/29.7:F	VFD STOP
			18			-5R9:31	/29.9:F	BYPASS RUN/STOP - COMMON POINT
			19			-5R9:34	/29.9:F	BYPASS RUN
			20			-5R9:32	/29.9:F	BYPASS STOP

Strip: =ESMDB-H1-B1-01+-13XC1

External targets				Internal targets			
Target designation	Wiring	Jumper	SD	Jumper	Wiring	Target designation	Placement	Function text
			1			-1SS13:2;-2S13:3	/32.6:C;/32.6:D	REMOTE START/STOP CMD - 1ST POINT
			2			-K13:A1;-2S13:4	/32.6:D;/32.6:D	REMOTE START/STOP CMD - 2ND POINT
			3			-1SS13:X4	/32.4:F	STARTER - LOCAL SELECTED - 1ST POINT
			4			-1SS13:X3	/32.4:F	STARTER - LOCAL SELECTED - 2ND POINT
			5			-1SS13:X4	/32.5:F	STARTER - REMOTE SELECTED - 1ST POINT
			6			-1SS13:X3	/32.5:F	STARTER - REMOTE SELECTED - 2ND POINT
			7			-1R12:31	/32.6:F	STARTER HEALTHY/FAULTY - COMMON POINT
			8			-1R12:32	/32.6:F	STARTER HEALTHY
			9			-1R12:34	/32.6:F	STARTER FAULTY
			10			-2R12:31	/32.7:F	STARTER ON/OFF - COMMON POINT
			11			-2R12:32	/32.7:F	STARTER ON
			12			-2R12:34	/32.7:F	STARTER OFF
			13			-1R13:31	/32.8:F	STARTER HEALTHY/FAULTY - COMMON POINT
			14			-1R13:32	/32.8:F	STARTER HEALTHY
			15			-1R13:34	/32.8:F	STARTER FAULTY
			16			-2R13:31	/32.9:F	STARTER ON/OFF - COMMON POINT
			17			-2R13:32	/32.9:F	STARTER ON
			18			-2R13:34	/32.9:F	STARTER OFF
			19			-VMR13:11;-K12:13	/32.4:B;/32.7:B	REMOTE EMERGENCY PUSH BUTTON - 1ST POINT
			20			-EP13:1	/32.6:B	REMOTE EMERGENCY PUSH BUTTON - 2ND POINT

Strip: =ESMDB-H1-B1-01+-14XC1

External targets				Internal targets			
Target designation	Wiring	Jumper	SD	Jumper	Wiring	Target designation	Placement	Function text
			1			-1SS14:2	/33.8:C	REMOTE START/STOP CMD - 1ST POINT

The technical information contained in this document is the exclusive property of UTEC and can not be used or disclosed to third parties of any kind without its written consent.

Rev. No.	Date	Name	Rev. Description

Checked

Approved

Date

Customer Name: NPMANJV

Project Name: 219-The Address Hotel & Service Appartments

Item Name: ESMDB-H1-B1-01

Page Title: Terminal diagram

DWG. No. U25-2006-Q8479
Ref. No. Q8476
Job No. 3530105760
SAP Line 100
S/N 26-5760-0100-01

Item No. 10

QTY

=
+
Rev. No.
Page No. 49
Total Pages 56

Terminal diagram

Strip: =ESMDB-H1-B1-01+-14XC1

External targets						Internal targets			
Target designation	Wiring	Jumper	SD		Jumper	Wiring	Target designation	Placement	Function text
			2				-K14:A1;-2S14:4	/33.9:D;/33.8:D	REMOTE START/STOP CMD - 2ND POINT
			3				-1SS14:X4	/33.5:F	STARTER - LOCAL SELECTED - 1ST POINT
			4				-1SS14:X3	/33.5:F	STARTER - LOCAL SELECTED - 2ND POINT
			5				-1SS14:X4	/33.6:F	STARTER - REMOTE SELECTED - 1ST POINT
			6				-1SS14:X3	/33.6:F	STARTER - REMOTE SELECTED - 2ND POINT
			7				-1R14:31	/33.7:F	STARTER HEALTHY/FAULTY - COMMON POINT
			8				-1R14:32	/33.7:F	STARTER HEALTHY
			9				-1R14:34	/33.7:F	STARTER FAULTY
			10				-2R14:31	/33.8:F	STARTER ON/OFF - COMMON POINT
			11				-2R14:32	/33.8:F	STARTER ON
			12				-2R14:34	/33.8:F	STARTER OFF
			13				-VMR14:11;-K14:13	/33.7:B;/33.10:B	REMOTE EMERGENCY PUSH BUTTON - 1ST POINT
			14				-EP14:1	/33.8:B	REMOTE EMERGENCY PUSH BUTTON - 2ND POINT

Strip: =ESMDB-H1-B1-01+-XCM1

External targets						Internal targets			
Target designation	Wiring	Jumper	SD		Jumper	Wiring	Target designation	Placement	Function text
			3				-R2:11	/39.2:B	QG - REMOTE INDICATION - STATUS - COM
			4				-R2:14	/39.2:B	QG - REMOTE INDICATION - STATUS - ON
			5				-R2:12	/39.2:B	QG - REMOTE INDICATION - STATUS - OFF
			6				-R3:21	/39.3:B	QG - REMOTE INDICATION - TRIP - 1ST POINT
			7				-R3:24	/39.3:B	QG - REMOTE INDICATION - TRIP - 2ND POINT
			8				-R11:11	/39.7:E	QG - REMOTE INDICATION - STATUS - COM
			9				-R11:14	/39.7:E	REMOTE INDICATION - SOURCE 1 HEALTHY
			10				-R11:12	/39.7:E	REMOTE INDICATION - SOURCE 1 FAULTY
			1				-MCB7:1	/14.2:D	REMOTE START/STOP CMD - 1ST POINT
			2				-R9:A1	/14.2:E	REMOTE START/STOP CMD - 2ND POINT

Strip: =ESMDB-H1-B1-01+-XCM2

External targets						Internal targets			
Target designation	Wiring	Jumper	SD		Jumper	Wiring	Target designation	Placement	Function text
			3				-R5:11	/39.4:B	QG - REMOTE INDICATION - STATUS - COM

The technical information contained in this document is the exclusive property of UTEC and can not be used or disclosed to third parties of any kind without its written consent.

Rev. No.	Date	Name	Rev. Description

Checked
Approved
Date

Customer Name: NPMANJV
Project Name: 219-The Address Hotel & Service Appartments
Item Name: ESMDB-H1-B1-01
Page Title: Terminal diagram
DWG. No. U25-2006-Q8479
Ref. No. Q8476
Job No. 3530105760
SAP Line 100
S/N 26-5760-0100-01
Item No. 10
QTY
=
+
Rev. No.
Page No. 50
Total Pages 56

Terminal diagram

Strip: =ESMDB-H1-B1-01+-XCM2

External targets				Internal targets			
Target designation	Wiring	Jumper	SD	Jumper	Wiring	Target designation	Placement	Function text
			4			-R5:14	/39.4:B	QG - REMOTE INDICATION - STATUS - ON
			5			-R5:12	/39.4:B	QG - REMOTE INDICATION - STATUS - OFF
			6			-R6:21	/39.5:B	QG - REMOTE INDICATION - TRIP - 1ST POINT
			7			-R6:24	/39.5:B	QG - REMOTE INDICATION - TRIP - 2ND POINT
			8			-R12:11	/39.8:E	QG - REMOTE INDICATION - STATUS - COM
			9			-R12:14	/39.8:E	REMOTE INDICATION - SOURCE 2 HEALTHY
			10			-R12:12	/39.8:E	REMOTE INDICATION - SOURCE 2 FAULTY
			1			-MCB8:1	/14.7:D	REMOTE START/STOP CMD - 1ST POINT
			2			-R10:A1	/14.7:E	REMOTE START/STOP CMD - 2ND POINT

Strip: =ESMDB-H1-B1-01+-XCMI

External targets				Internal targets			
Target designation	Wiring	Jumper	SD	Jumper	Wiring	Target designation	Placement	Function text
			1			-ATS;-XCMO:4;-DM6	/36.8:C;/36.12:D;/2	MODBUS - OUTPUT TERMINAL
			2			-ATS;-XCMO:3;-DM6	/36.8:C;/36.12:E;/20	MODBUS - OUTPUT TERMINAL
			3			-ATS;-XCMO:2;-DM1	/36.8:C;/36.12:E;/15	=
			4			-ATS;-XCMO:1	/36.8:C;/36.12:E	=

Strip: =ESMDB-H1-B1-01+-XCMO

External targets				Internal targets			
Target designation	Wiring	Jumper	SD	Jumper	Wiring	Target designation	Placement	Function text
			1			-XCMI:4	/12.10:A	
			2			-XCMI:3;-M1DM:C;-	/12.10:A;/12.8:A;/13	
			3			-XCMI:2;-M1DM:-;-M	/12.9:A;/12.8:A;/13.	
			4			-XCMI:1;-M1DM:+;-	/12.9:A;/12.8:A;/13.	

Strip: =ESMDB-H1-B1-01+-XM1

External targets				Internal targets			
Target designation	Wiring	Jumper	SD	Jumper	Wiring	Target designation	Placement	Function text
-M1DM:k1			1			-M1CT1:S1	/12.2:A	RED PHASE - TO METER
-M1DM:I1			2					RED PHASE - GROUND

The technical information contained in this document is the exclusive property of UTEC and can not be used or disclosed to third parties of any kind without its written consent.

Rev. No.	Date	Name	Rev. Description

Checked

Approved

Date

Customer Name: NPMANJV

Project Name: 219-The Address Hotel & Service Appartments

Item Name: ESMDB-H1-B1-01

Page Title: Terminal diagram

DWG. No. U25-2006-Q8479
Ref. No. Q8476
Job No. 3530105760
SAP Line 100
S/N 26-5760-0100-01

Item No. 10

QTY

=
+
Rev. No.
Page No. 51
Total Pages 56

Terminal diagram

Strip: =ESMDB-H1-B1-01+-XM1

External targets					Internal targets			
Target designation	Wiring	Jumper	SD	Jumper	Wiring	Target designation	Placement	Function text
-M1DM:k2			3			-M1CT2:S1	/12.3:B	YELLOW PHASE - TO METER
-M1DM:I2			4					YELLOW PHASE - GROUND
-M1DM:k3			5			-M1CT3:S1	/12.3:C	BLUE PHASE - TO METER
-M1DM:I3			6					BLUE PHASE - GROUND
			7					COMMON GROUNDING
-M1CT3:S2			8				/12.4:C	EARTH LINK

Strip: =ESMDB-H1-B1-01+-XM2

External targets					Internal targets			
Target designation	Wiring	Jumper	SD	Jumper	Wiring	Target designation	Placement	Function text
-M2DM:k1			1			-M2CT1:S1	/13.2:A	RED PHASE - TO METER
-M2DM:I1			2					RED PHASE - GROUND
-M2DM:k2			3			-M2CT2:S1	/13.3:B	YELLOW PHASE - TO METER
-M2DM:I2			4					YELLOW PHASE - GROUND
-M2DM:k3			5			-M2CT3:S1	/13.3:C	BLUE PHASE - TO METER
-M2DM:I3			6					BLUE PHASE - GROUND
			7					COMMON GROUNDING
-M2CT3:S2			8				/13.4:C	EARTH LINK

Strip: =ESMDB-H1-B1-01+-XP7

External targets					Internal targets			
Target designation	Wiring	Jumper	SD	Jumper	Wiring	Target designation	Placement	Function text
			1			-KV7:2T1;-OLR7:2	/21.4:D;/21.3:E	
			1			-KV9:2T1;-OLR9:2	/27.4:D;/27.3:E	
			2			-KV7:4T2;-OLR7:4	/21.5:D;/21.3:E	
			2			-KV9:4T2;-OLR9:4	/27.5:D;/27.3:E	
			3			-KV7:6T3;-OLR7:6	/21.5:D;/21.3:E	
			3			-KV9:6T3;-OLR9:6	/27.5:D;/27.3:E	
			4			-VFD7:MPE	/21.4:C	
			4			-VFD9:MPE	/27.4:C	

The technical information contained in this document is the exclusive property of UTEC and can not be used or disclosed to third parties of any kind without its written consent.

Rev. No.	Date	Name	Rev. Description

Checked
Approved
Date

Customer Name: NPMANJV
Project Name: 219-The Address Hotel & Service Appartments
Item Name: ESMDB-H1-B1-01
Page Title: Terminal diagram

DWG. No. U25-2006-Q8479
Ref. No. Q8476
Job No. 3530105760
SAP Line 100
S/N 26-5760-0100-01

Item No. 10
QTY

=
+
Rev. No.
Page No. 52
Total Pages 56

Terminal diagram

Strip: =ESMDB-H1-B1-01+-XP8

External targets					Internal targets			
Target designation	Wiring	Jumper		SD	Jumper	Wiring	Target designation	Placement	Function text
			1				-KV8:2T1;-OLR8:2	/24.4:D;/24.3:E	
			2				-KV8:4T2;-OLR8:4	/24.5:D;/24.3:E	
			3				-KV8:6T3;-OLR8:6	/24.5:D;/24.3:E	
			4				-VFD8:MPE	/24.4:C	

Strip: =ESMDB-H1-B1-01+-XP12

External targets					Internal targets			
Target designation	Wiring	Jumper		SD	Jumper	Wiring	Target designation	Placement	Function text
			1				-OLR12:2	/31.2:D	MOTOR U POWER TERMINAL
			2				-OLR12:4	/31.2:D	
			3				-OLR12:6	/31.2:D	
			4						

Strip: =ESMDB-H1-B1-01+-XP13

External targets					Internal targets			
Target designation	Wiring	Jumper		SD	Jumper	Wiring	Target designation	Placement	Function text
			1				-OLR13:2	/31.6:D	MOTOR U POWER TERMINAL
			2				-OLR13:4	/31.6:D	
			3				-OLR13:6	/31.6:D	
			4						

Strip: =ESMDB-H1-B1-01+-XP14

External targets					Internal targets			
Target designation	Wiring	Jumper		SD	Jumper	Wiring	Target designation	Placement	Function text
			1				-OLR14:2	/33.2:D	MOTOR U POWER TERMINAL
			2				-OLR14:4	/33.2:D	
			3				-OLR14:6	/33.2:D	
			4						

The technical information contained in this document is the exclusive property of UTEC and can not be used or disclosed to third parties of any kind without its written consent.

Rev. No.	Date	Name	Rev. Description

Checked
Approved
Date

Customer Name: NPMANJV
Project Name: 219-The Address Hotel & Service Appartments
Item Name: ESMDB-H1-B1-01
Page Title: Terminal diagram

DWG. No. U25-2006-Q8479
Ref. No. Q8476
Job No. 3530105760
SAP Line 100
S/N 26-5760-0100-01

Item No. 10
QTY

=
+
Rev. No.
Page No. 53
Total Pages 56

BILL OF MATERIALS

S/N	DEVICE TAG	PART NO.	DESCRIPTION	QTY.	MAKE
1	Q1CT1...Q1CT3;Q2CT1...Q2CT3;Q3CT1...Q3CT3;Q4CT1...Q4CT3 Q5CT1...Q5CT3;Q6CT1...Q6CT3	METSECT5CC010	current transformer tropicalised DIN mount 100 5 for cables d. 21, Class 0.5 at 2 VA, Class 1 at 2.5 VA, Class 3 at 3.5 VA	18	SCHNEIDER
2	ATS	InteliATS2-50	ATS CONTROLLER_InteliATS2 50_COMAP	1	COMAP
3	ATS	CM-RS232-485	Communication modul for configuration and monitoring InteliConfig and InteliSCADA.	1	COMAP
4	BAT1;BAT2	MB12-7	LEAD ACID BATTERY_7Ah_12VDC	2	MAKPOWER
5	1BS7...1BS9;1S13;1S14;1VS7...1VS9	XA2EA42	PUSH BUTTON-RED-1N.C.	8	SCHNEIDER
6	2BS7...2BS9;2S13;2S14;2VS7...2VS9	XA2EA31	PUSH BUTTON-GREEN-1N.O.	8	SCHNEIDER
7	D1...D4	990-0002A-DIODE	DIODE_2A	4	REPUTED
8	DM1...DM6;M1DM;M2DM	METSEPM2130	EasyLogic PM2130, Power & Energy meter, up to the 31st harmonic, LED display, RS485, class 0.5S	8	SCHNEIDER
9	E1...E4	NSYCR20WU2	ClimaSys PTC heating resistance 20W, 110-250V	4	SCHNEIDER
10	ELR7...ELR14	56173	Earth-leakage relay RH99M with manual reset - 0.03..30 A - 0..4.5 s - 240 V	8	SCHNEIDER
11	EP7...EP9;EP13;EP14	XB4BS9445	Emergency stop push button, Harmony XB4, metal, red mushroom, 40mm, 22mm, trigger latching key release, 1NO+1NC	5	SCHNEIDER
12	FAN7...FAN9	NSYCAG223LPF	outlet grille plast cut out 223x223mm ext dim 268x248mm IP54	3	SCHNEIDER
13	FAN7...FAN9	NSYCVF165M230PF	ClimaSys CV_FAN WITH OUTLET GRILLE AND FILTER G2_CUT-OUT 223X223mm_IP54_230VAC_50/60Hz	3	SCHNEIDER
14	1H7...1H9;1H14;4H7...4H9;12H1;13H1;H1;H4	XA2EVM4LC	Pilot light ,220V AC, Red	11	SCHNEIDER
15	3H7...3H9;3H14;6H7...6H9;12H3;13H3;H2;H5	XA2EVM8LC	Pilot light ,220V AC, Yellow	11	SCHNEIDER
16	H3;H6	XA2EVM6LC	Pilot light ,220V AC, Blue	2	SCHNEIDER
17	H7;H10	XA2EVB4LC	Pilot light, plastic, red, Ø 22 mm, with integral LED, 24 V AC/DC	2	SCHNEIDER
18	H8;H11	XA2EVB3LC	Pilot light, plastic, green, Ø 22 mm, with integral LED, 24 V AC/DC	2	SCHNEIDER
19	H9;H12	XA2EVB8LC	Pilot light, plastic, yellow, Ø 22 mm, with integral LED, 24 V AC/DC	2	SCHNEIDER
20	2H7...2H9;2H14;5H7...5H9;12H2;13H2	XA2EVM3LC	Pilot light ,220V AC, Green	9	SCHNEIDER
21	HG1;HG2	NSYCCOHYT230VID	Climasys CC - electronic hygrotherm - 200â€¦240 V - temp -40â€¦80 C - Hr 20â€¦80%	2	SCHNEIDER
22	K1	CAD32M7	CAD32_3N.O. + 2N.C._COIL-220 Vac_10A	1	SCHNEIDER
23	K12...K14;KB7;KB9;KL7;KL9;KV7;KV9	LC1D09M7	Contactor, TeSys Deca, 3P(3NO), AC-3/AC-3e, <=440V, 9A, 220V AC 50/60Hz coil, screw clamp terminals	9	SCHNEIDER
24	KB8;KL8;KV8	LC1D18M7	TeSys Deca contactor - 3P(3 NO) - AC-3/AC-3e - <= 440 V 18 A - 220 V AC coil	3	SCHNEIDER
25	KV7...KV9	LAD9V2	MECHANICAL INTERLOCK	3	SCHNEIDER
26	L1...L5	15-12-073-5W-LT-WH	LED TUBE LIGHT W/HOLDER_5W_LISTOCASA(door lamp)	5	REPUTED
27	M1CT1...M1CT3;M2CT1...M2CT3	METSECT5MA025	Current transformer tropicalised, PowerLogic, DIN mount 250 5 cables d. 27 - bars 10x32 15x25, Class 0.5 at 6 VA, Class 1 at 8 VA	6	SCHNEIDER

The technical information contained in this document is the exclusive property of UTEC and can not be used or disclosed to third parties of any kind without its written consent.

Rev. No.	Date	Name	Rev. Description

Checked
Approved
Date

Customer Name: NPMANJV
Project Name: 219-The Address Hotel & Service Appartments
Item Name: ESMDB-H1-B1-01
Page Title: Material List
DWG. No. U25-2006-Q8479
Ref. No. Q8476
Job No. 3530105760
SAP Line 100
S/N 26-5760-0100-01
Item No. 10
QTY
=
+
Rev. No.
Page No. 54
Total Pages 56

BILL OF MATERIALS

S/N	DEVICE TAG	PART NO.	DESCRIPTION	QTY.	MAKE
28	1MCB1...1MCB3;2MCB1...2MCB3;3MCB1...3MCB3;4MCB1...4MCB3 5MCB1...5MCB3;6MCB1...6MCB3;7MCB1...7MCB4;8MCB1...8MCB4 9MCB1...9MCB4;10MCB1;11MCB1;12MCB1...12MCB5;13MCB1...13MCB4 14MCB1...14MCB5;MCB1...MCB8;MCB14...MCB16	A9F44106	Acti9 iC60N 1P 6A C Miniature Circuit breaker	57	SCHNEIDER
29	MCB9...MCB11;MCB17;MCB18	A9F44206	ACTI9 IC60N 2P 6A C Miniature Circuit breaker	5	SCHNEIDER
30	MCB12;MCB13	A9F44306	MCB_3P_06A	2	SCHNEIDER
31	OLR7;OLR9;OLR14	LRD12	TeSys Deca, thermal overload relay, 5.5 to 8 A, class 10A	3	SCHNEIDER
32	OLR8	LRD16	TeSys Deca, thermal overload relay, 9 to 13 A, class 10A	1	SCHNEIDER
33	OLR12;OLR13	LRD10	TeSys Deca, thermal overload relay, 4 to 6 A, class 10A	2	SCHNEIDER
34	PS	QUINT4-PS/1AC/24DC/10	QUINT POWER power supply with free choice of output characteristic curve, SFB (selective fuse breaking) technology, and NFC interface, input: 1-phase, output: 24 V DC/10 A	1	PHOENIX CONTACT
35	Q1;Q2;Q5;Q6;Q10;Q11	C10F3TM040C	MCCB 3P3D TMD NSX100F COMPACT 50°C	6	SCHNEIDER
36	Q1...Q6;Q10;Q11	LV429289	Plug-in kit, Compact NSX 100/160/250, 3 poles	8	SCHNEIDER
37	Q1...Q6;Q10;Q11;QM1;QM2	29450	1 AUX.SWITCH C/O CONTACT OF/SDE/SDV(NS80	20	SCHNEIDER
38	Q1...Q6;Q10;Q11;QM1;QM2	LV429275	1 SUPPORT FOR 2 MOVING CONNECTORS, NSX 100/160/250, SE;	10	SCHNEIDER
39	Q1...Q6;Q10;Q11;QM1;QM2	LV429274	9 WIRE MOVING CONNECTOR FOR BREAKER, NSX 100/160/250, SE;	12	SCHNEIDER
40	Q1...Q6;Q10;Q11;QM1;QM2	LV429273	9 WIRE FIXED CONNECTOR FOR BASE, NSX 100/160/250/400/630, SE;	12	SCHNEIDER
41	Q3;Q4	C10F3TM063C	MCCB 3P3D TMD NSX100F COMPACT 50°C	2	SCHNEIDER
42	Q7;Q9;Q14	GV2L14	Motor circuit breaker, TeSys GV2, 3P, 10 A, magnetic, rotary handle, screw clamp terminals	3	SCHNEIDER
43	Q7...Q9;Q12...Q14	GVAD0110	AUX 690V 1-NO AUX + 1-NC FAULT GV2+GV3 ACCESSORY	6	SCHNEIDER
44	Q7...Q9;Q12...Q14	GV2APN01	Extended rotary handle kit,TeSys Deca Fram 2,IP54,black handle,with trip indication,for GV2L/GV2P	6	SCHNEIDER
45	Q7TH;Q8TH;Q9TH	NSYCCOTHO	ClimaSys CC - simple thermostat 250V - range of temperature 0...60°C - NO - °C	3	SCHNEIDER
46	Q8	GV2L16	Motor circuit breaker, TeSys GV2, 3P, 14 A, magnetic, rotary handle, screw clamp terminals	1	SCHNEIDER
47	Q10;Q11;QM1;QM2	LV429387	MX Shunt Release, ComPact NSX, Rated Voltage 220/240 VAC 50/60 Hz, 208/277 VAC 60 Hz, Screwless Spring Terminal Connections	4	SCHNEIDER
48	Q12;Q13	GV2L10	Motor circuit breaker, TeSys GV2, 3P, 6.3 A, magnetic, rotary handle, screw clamp terminals	2	SCHNEIDER
49	QM1;QM2	C25F4TM200C	MCCB 4P4D TMD 200A NSX250F COMPACT 50°C	2	SCHNEIDER
50	QM1;QM2	LV431541	standard motor mechanism module MT250, ComPact NSX250, 220/240 VAC 50/60 Hz, 208/277 VAC 60 Hz	2	SCHNEIDER
51	QM1;QM2	LV429290	plug-in kit, ComPact NSX100/160/250, 4 poles	2	SCHNEIDER
52	QM1	29349	mechanical interlocking by base plate, ComPact NSX100/160/250	1	SCHNEIDER
53	R1...R8;R11;R12	RXM4AB1BD	PLUG-IN RELAY_Vs: 24 V DC_4 C/O (SPDT)_6A	10	SCHNEIDER

The technical information contained in this document is the exclusive property of UTEC and can not be used or disclosed to third parties of any kind without its written consent.

BILL OF MATERIALS

S/N	DEVICE TAG	PART NO.	DESCRIPTION	QTY.	MAKE
54	1R7...1R9;1R12...1R14;2R7...2R9;2R12...2R14;3R7...3R9;4R7...4R9 5R7...5R9;6R7...6R9;R1...R12;RL7...RL9;RR7...RR9;RV7...RV9	RXZE2M114M	SKT < 250 V AC, 10 A	45	SCHNEIDER
55	1R7...1R9;1R12...1R14;2R7...2R9;2R12...2R14;3R7...3R9;4R7...4R9 5R7...5R9;6R7...6R9;R9;R10;RL7...RL9;RR7...RR9;RV7...RV9	RXM4AB1P7	PLUG-IN RELAY_Vs: 230 V AC-50/60Hz_4 C/O (SPDT)_6A	35	SCHNEIDER
56	1SS7...1SS9;1SS13;1SS14;2SS7...2SS9	XB4BD33	SELECTOR SWITCH - STANDARD HANDLE, BLACK - 2NO	8	SCHNEIDER
57	1SS13;1SS14;2SS7...2SS9	ZBE101	AUXILIARY CONTACT 1N.O.	10	SCHNEIDER
58	TD7...TD14	50437	Closed toroid A type, VigiPacT, Vigilohm, TA30, inner diameter 30mm, rated current 65A	8	SCHNEIDER
59	UPS	QUINT-UPS/ 24DC/ 24DC/10	QUINT-UPS/ 24DC/ 24DC/10 - Uninterruptible power supply - DIN rail mounting, input: 24 V DC, output: 24 V DC/10 A	1	PHOENIX CONTACT
60	VFD7;VFD9	ATV630U30N4	ATV630 VFD, 3kW, 3Ph, 60Hz. 380-480VAC	2	SCHNEIDER
61	VFD7...VFD9	VW3A1112	door mounting kit, Altivar, for remote graphic terminal, IP65	3	SCHNEIDER
62	VFD7...VFD9	VW3A1104R30	remote cable, Altivar, for graphic display terminal, 3 meters	3	SCHNEIDER
63	VFD8	ATV630U55N4	ATV630 VFD, 3.0kW, 3Ph, 60Hz. 380-480VAC	1	SCHNEIDER
64	VMR7...VMR9;VMR12...VMR14	RM22TR33	VMR_PH SEQ SW_PH FAIL_OV(V): 3x 456-576 V a.c_UV(V): 3x 304-384 V a.c_Tv(s): ON&OFF DELAY 0.1-30s ADJ_2C.O._8A@AC1-250V_SCREW TER	6	SCHNEIDER
65	X1;XCM1;XCM2;XCMI;XCMO	41-01-05-C1A1A	ELMEX TB-4MM W/O COVER_GREY_KUT4	14	ELMEX
66	X1;XCM1;XCM2;XCMI;XCMO;XM1;XM2;XP12...XP14	41-01-05-U3A0A2	ELMEX TB-END COVER FOR 4/6/10MM_GREY_KPX	10	ELMEX
67	7XC1...7XC4;7XC6;7XC7;8XC1...8XC4;8XC6;8XC7;9XC1...9XC4;9XC6;9XC7 13XC1;14XC1;X1;X2;XC1...XC6;XCM1;XCM2;XCMI;XCMO;XM1;XM2;XP7;XP8 XP12...XP14	41-01-04-0400A	ONKA TB-STOPPER_GREY_MRK-D	89	ONKA
68	7XC1...7XC4;7XC6;7XC7;8XC1...8XC4;8XC6;8XC7;9XC1...9XC4;9XC6;9XC7 13XC1;14XC1;X2;XC1...XC6;XCM1;XCM2	41-01-05-B1A1A	ELMEX TB-2.5MM W/O COVER_GREY_KUT2.5	253	ELMEX
69	7XC1...7XC4;7XC6;7XC7;8XC1...8XC4;8XC6;8XC7;9XC1...9XC4;9XC6;9XC7 13XC1;14XC1;X2;XC1...XC6;XCM1;XCM2;XP7;XP8	41-01-05-U2A0A2	ELMEX TB-END COVER FOR KUT-2.5MM_GREY_KP	36	ELMEX
70	XM1;XM2	41-01-05-OAT6DTS	ELMEX_TB TEST & DISCONNECT_6MM_OAT6DTS	16	ELMEX
71	XP7;XP8;XP12...XP14	41-01-05-E1A1A2	ELMEX TB-10MM W/O COVER_GREY_KUT10	18	ELMEX

The technical information contained in this document is the exclusive property of UTEC and can not be used or disclosed to third parties of any kind without its written consent.

Rev. No.	Date	Name	Rev. Description	Checked	Approved	Date

Customer Name: NPMANJV
Project Name: 219-The Address Hotel & Service Appartments
Item Name: ESMDB-H1-B1-01
Page Title: Material List
DWG. No. U25-2006-Q8479
Ref. No. Q8476
Job No. 3530105760
SAP Line 100
S/N 26-5760-0100-01
Item No. 10
QTY
Rev. No.
Page No. 56
Total Pages 56