COMP2611

COMP2611 Computer Organization
Spring 2018, HKUST
Notes by **Gerald Liu**
wliuax@connect.ust.hk

COMP2611
- Digital Logic
  - Combinational Logic
  - Sequential Logic
- Data Representation
  - Integer
  - Floating Point
  - Character
- ISA
  - Syntax
  - Registers
  - Instruction Encoding
    - R-format
    - I-format
    - J-format
- Computer Arithmetic
  - 2's Complement Arithmetic
  - Arithmetic Logic Unit
  - Multiplication and Division
- Processor
  - ALU Controls
  - Controls
  - Hazards
    - Structural Hazards
    - Data Hazards
    - Control Hazards
- Memory
  - Hierarchy
  - Cache

Digital Logic

Gates: AND, OR, NOT, NAND, NOR, XOR

1-bit half adder: $S = A \oplus B$, $C = A \cdot B$

Combinational Logic

Multiplexor (Selector): 2^n data inputs, n selection inputs (1-bit), 1 output

Decoder: 1 n-bit input, 2^n 1-bit outputs

Canonical forms: $D = \sum m_i = \prod M_i \rightarrow$ simplify with Boolean Algebra or K-map (cells following Grey code)

Sequential Logic

S-R latch (R,S): latch (0,0) / reset to 0 (1,0) / set to 1 (0,1) / invalid (1,1)

D latch (D, WE): latch (WE = 0) / set to D (WE = 1)

Register: a collection of D latches controlled by a common WE

D Flip-flop: output updates on clock edges (falling / rising)

Data Representation

Integer

Unsigned integer: $[000...00_2, 111...11_2] = [0, 2^k-1]$

Signed integer: $[100...00_2, 011...11_2] = [-2^{k-1}, 2^{k-1}-1]$
Positive to negative (in 2's complement):

- e.g. $+6 = 0110_2$
- Invert bits: $-7 = 1001_2$
- Add 1: $-6 = 1010_2$

Zero extension: bitwise logical operations, unsigned int
Signed extension: signed int

Floating Point

S	Exponent (biased)	Significand
1	8 (single) / 11 (double)	23 (single) / 52 (double)
0/1	Exponent + Bias = Exponent + $2^{k-1}-1$	after an implicit 1 (hidden bit)

Exponent Significand	0 (denormalized)	$[1, 2^k-2]$ (normalized)	2^k-1 (special cases)
0	0	$(-1)^S \times 1.F \times 2^{E-Bias}$	$(-1)^S \times \infty$
$\neq$ **0**	$(-1)^S \times 0.F \times 2^{-126}$	$(-1)^S \times 1.F \times 2^{E-Bias}$	NaN

Character

unsigned byte (8 bits) following the ASCII standard.

ISA

Syntax

```
# Data segment
.data
h: .word 1 2 3 4    # h is an array of size 4, each element is a word (32 bit)
s: .word 5

# Program begins
.text
.globl __start
__start:

add     $rd, $rs, $rt   # $rd = $rs + $rt
sub     $rd, $rs, $rt   # $rd = $rs - $rt
addi    $rt, $rs, imm   # $rt = $rs + imm
addu    $rd, $rs, $rt   # $rd = $rs + $rt, ignoring overflow
subu    $rd, $rs, $rt   # $rd = $rs - $rt, ignoring overflow
addiu   $rt, $rs, imm   # $rt = $rs + imm(sign-extended), ignoring overflow

mult    $rs, $rt        # Hi, Lo = $rs * $rt
multu   $rs, $rt
# overflow ignored, no overflow if Hi is 0 for multu or the replicated sign of Lo for mult

div     $rs, $rt        # Lo = $rs / $rt; Hi = $rs % $rt
divu    $rs, $rt

mflo    $rd             # $rd = Lo
mfhi    $rd             # $rd = Hi

li      $rd, 100        # $rd = 100
move    $rd, $rs        # $rd = $rs
la      $rd, label      # $rd = addr(label)

and     $rd, $rs, $rt   # $rd = $rs & $rt; AND
or      $rd, $rs, $rt   # $rd = $rs | $rt; OR
nor     $rd, $rs, $rt   # $rd = ~($rs | $rt); NOR
nor     $rd, $rs, $0    # $rd = ~$rs; NOT
xor     $rd, $rs, $rt   # $rd = $rs ^ $rt; XOR
andi    $rt, $rs, 100   # $rt = $rs & 100
ori     $rt, $rs, 100   # $rt = $rs | 100

sll     $rd, $rt, 3     # $s1 = $s2 << 2 = $s2 * 2^2; Shift left by constant
srl     $rd, $rt, 3     # $s1 = $s2 >> 2 = $s2 / 2^3; Shift right by constant
sllv    $rd, $rt, $rs   # $rd = $rt << $rs
srlv    $rd, $rt, $rs   # $rd = $rt >> $rs

# Data transfer
# Big-endian: the end of a word matches a bigger address
lw      $rt, 100($rs)   # $rt = mem[$rs+100]; load word to reg from mem
sw      $rt, 100($rs)   # Memory[$rs+100] = $rt; store word from reg to mem


lb      $rt, 100($rs)   # load byte, sign extended to 32 bits in $rt
```

```
lbu     $rt, 100($rs)   # load byte unsigned, zero extended to 32 bits in $rt
sb      $rt, 100($rs)   # store rightmost byte in $rt


# if-else statement
    beq $s3, $s4, If
    beq $s3, $s1, ElseIf
    j Else
If: add $s0, $s1, $s2
    j exit
ElseIf: sub $s0, $s1, $s2
    j exit
Else: add $s0, $s1, $s4
    exit:

# while loop
Loop: bne $t0, $s2, Exit     # go to Exit if $t0 != $s2
    # ...
    addi $s1, $s1, 1        # $s1 = $s1 + 1
    j Loop
Exit:

# Branch comparison
slt     $rd, $rs, $rt   # $rd gets 1 if $rs < $rt
bne     $rs, $0, Label  # go to L if $rs != 0
# slti $rt, $rs, 10

# unsigned comparison
sltu    $rd, $rs, $rt
sltiu   $rt, $rs, imm   # imm is sign-extended

# blt (‘branch on less than’)
# ble (‘branch on less than or equal’)
# bgt (‘branch on greater than’)
# bge (‘branch on greater than or equal’)
# Branch comparison with zero
bgez $s, label  # if ($s >= 0)
bgtz $s, label  # if ($s > 0)
blez $s, label  # if ($s <= 0)
bltz $s, label  # if ($s < 0)

# Nested procedures
    jal proc1   #20 # [jump] $ra = PC + 4 = 24; [and link] PC = addr(proc1) = 60
    ...         #24
proc1: push     #60 # addi $sp, $sp, -4; sw $ra, 0($sp)
    ...         #64
    jal proc2   #68 # [jump] $ra = PC + 4 = 72; [and link] PC = addr(proc2) = 80
    pop         #72 # lw $ra, 0($sp); addi $sp, $sp, 4;
    jr $ra      #76 # return to #24
    ...
proc2: push     #80 # addi $sp, $sp, -4; sw $ra, 0($sp)
    ...         #84

    pop         #88 # lw $ra, 0($sp); addi $sp, $sp, 4;
```

```
    jr $ra      #76 # return to #72

# load a 32-bit constant 0x003D0900
lui $s0, 61         # load upper immediate as 61 = 0x003D
# $s0 = 0000 0000 0011 1101 0000 0000 0000 0000
ori $s0, $s0, 2304  # set the lower 16 bits from 0s to 2304 = 0000 1001 0000 0000
```

Registers

Name	Number	Use	Preserved on Call?
$zero	$0	constant 0	N/A
$at	$1	assembler temporary	N/A
$v0–$v1	$2–$3	function returns and expression evaluation	No
$a0–$a3	$4–$7	function arguments	No
$t0–$t7	$8–$15	temporaries	No
$s0–$s7	$16–$23	saved temporaries	Yes
$t8–$t9	$24–$25	temporaries	No
$k0–$k1	$26–$27	reserved for OS kernel	N/A
$gp	$28	global pointer	Yes
$sp	$29	stack pointer	Yes
$fp	$30	frame pointer	Yes
$ra	$31	return address	Yes

Program counter (PC) : holds the address of current instruction
updated after executing: PC = PC + 4 or PC = branch target address

Instruction Encoding

R-format

op	rs	rt	rd	shamt	funct
6 bits	5 bits	5 bits	5 bits	5 bits	6 bits
opcode	1st register source	2nd register source	register destination	shift amount	function code

usage: `add, sub, and, or, sll, srl`

I-format

op	rs	rt	const / address
6 bits	5 bits	5 bits	16 bits
opcode	base register	register source / destination	const: $[-2^{15}, 2^{15}-1]$ address: offset on base address

usage: `andi, ... , lw, sw`

Conditional branches: PC-relative addressing

- Branch Address = PC + 4 + Branch Offset × 4 (Branch Offset is described in number of **words**)
- Branching range: [-128KB, 128KB-1] = 2^{16}B

J-format

op	const
6 bits	26 bits

Pseudo-direct Addressing:

- Jump Address = const concatenated with the upper 4 bits of PC
- Jump Range: 256MB = 2^{26}B

Computer Arithmetic

2's Complement Arithmetic

Overflow condition:

Operation	Sign of X	Sign of Y	Sign of Result
X + Y	0	0	1
X + Y	1	1	0
X - Y	0	1	1
X - Y	1	0	0

Control jumps to a predefined address (code) to handle the exception.
The interrupted address is saved to EPC (Exception Program Counter) – return to it via `jr`

Arithmetic Logic Unit

Processor = Control Unit + ALU (arithmetic and logical operations) + Registers & Cache

Adder:

- 1-bit half adder: $C = ab$, $S = a \oplus b$
- 1-bit full adder: $C_{out} = (a+b)C_{in} + ab$, $S = a \oplus b \oplus C_{in} = (a\bar{b} + \bar{a}b)\overline{C_{in}} + (ab + \bar{a}\bar{b})C_{in}$

1-bit ALU: AND, OR, Addition, and Subtraction

1-bit ALU for bits #0 to #30	**1-bit ALU for bit #31 (MSB)**
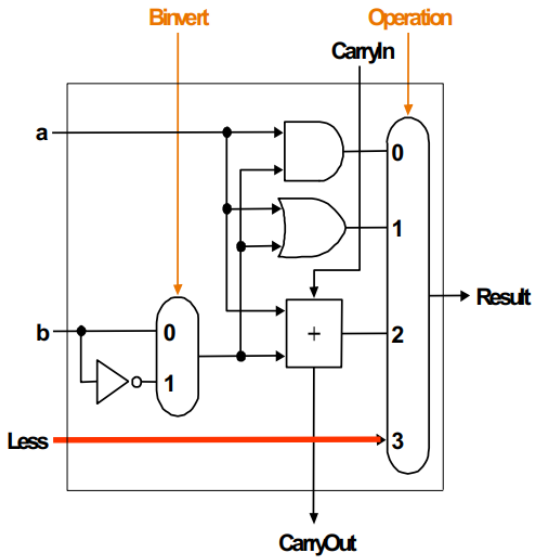	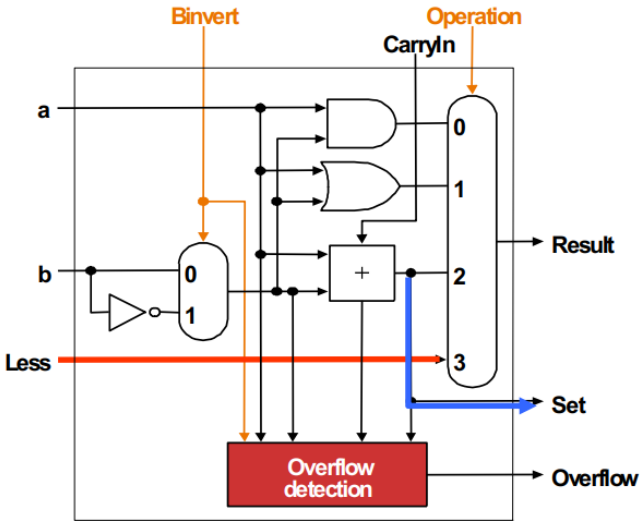

- Connect 32 1-bit ALU to form a 32-bit ALU
- `sub`: Invert (**Binvert** = 1), add 1 (**ALU0's CarryIn** = 1)
- `slt`: copy **Set** = Bit #31 of ($rs - $rt), to the Bit #0 of `slt`'s output = **Less** of the Bit #0
- `beq`: $rs - $rt == 0, all bits are 0 ⇔ NAND(Results0, 1, ... , 31) = 1
- For ALU0, Binvert and CarryIn are both 0 for `add`, `and`, `or`, and both 1 for `sub` ⇒ combine

32-bit ALU	Symbol
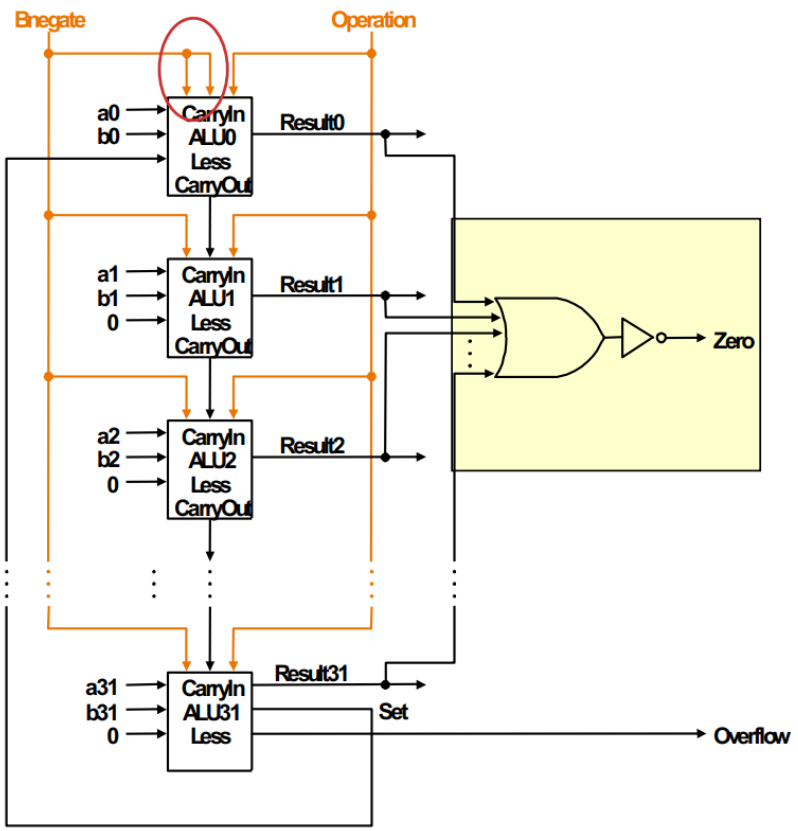	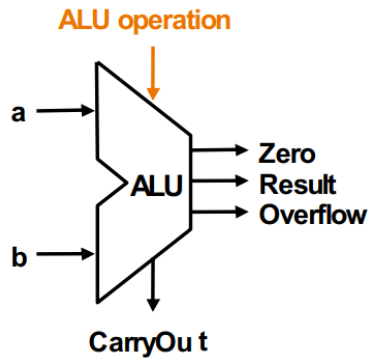

Carry-lookahead: for $C_{out} = (a+b)C_{in} + ab$,

- A Bit position generates a Carry iff both inputs are 1: $G_i = a_i + b_i$
- A Bit position propagates a Carry if exactly one input is 1: $P_i = a_i \cdot b_i$
- $C_{i+1} = G_i + P_i C_i = \sum_{j=0}^{i} (G_i \prod_{k=j+1}^{i-j} P_k) + C_0 \prod_{k=0}^{i} P_k$

  e.g. $C_4 = G_3 + G_2 P_3 + G_1 P_2 P_3 + G_0 P_1 P_2 P_3 + C_0 P_0 P_1 P_2 P_3$

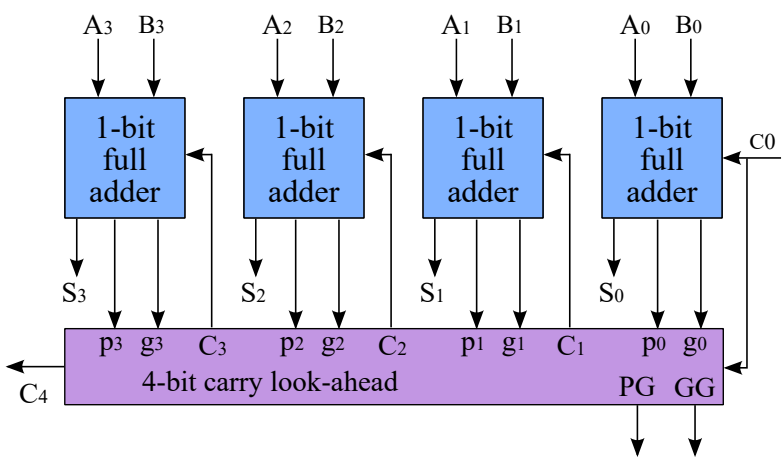

Multiplication and Division

(Example: 4-bit multiplication and division)

Unsigned multiplication:

```
Right(P) = Multiplier
while repetitions < 4
    if Product[0] = 1
        Left(P) = Left(P) + M
    P = P >> 1
```

Signed multiplication: Booth's algorithm

```
Right(P) = Multiplier
while repetitions < 4
    if Product[0] = 1 and Product[-1] = 0
        Left(P) = Left(P) - M
    else if Product[0] = 0 and Product[-1] = 1
        Left(P) = Left(P) + M
    P = P >> 1
```

Unsigned division:

```
Right(R) = Dividend
R = R << 1

while repetitions < 4
    Left(R) = Left(R) - D
    if R[7] = 1
        Left(R) = Left(R) + D
        R = R << 1
        R[0] = 0
    else
        R = R << 1
        R[0] = 1

Left(R) = Left(R) >> 1
```

Unsigned Multiplication

Multiplier

Multiplicand (M)	Product (P)	Remark
0110	0000 0011	Initial state
	0110 0011	Left(P) = Left(P) + M
	0011 0001	P = P >> 1
	1001 0001	Left(P) = Left(P) + M
	0100 1000	P = P >> 1
	0100 1000	No operation
	0010 0100	P = P >> 1
	0010 0100	No operation
	0001 0010	P = P >> 1

Signed Multiplication

Multiplier

Multiplicand (M)	Product (P)	Remark
0010	0000 0110 0	Initial state
	0000 0110 0	No operation
	0000 0011 0	P = P >> 1
	1110 0011 0	Left(P) = Left(P) - M
	1111 0001 1	P = P >> 1
	1111 0001 1	No operation
	1111 1000 1	P = P >> 1
	0001 1000 1	Left(P) = Left(P) + M
	0000 1100 0	P = P >> 1

Unsigned Division

Divisor (D)	Remainder (R)	Remark
0011	0000 0111	Initial state
	0000 1110	R = R << 1
	1101 1110	Left(R) = Left(R) – D
	0000 1110	Undo
	0001 1100	R = R << 1, R_0 = 0
	1110 1100	Left(R) = Left(R) – D
	0001 1100	Undo
	0011 1000	R = R << 1, R_0 = 0
	0000 1000	Left(R) = Left(R) – D
	0001 0001	R = R << 1, R_0 = 1
	1110 0001	Left(R) = Left(R) – D
	0001 0001	Undo
	0010 0010	R = R << 1, R_0 = 0
	0001 0010	Left(R) = Left(R) >> 1

Remainder — correction — Quotient

Signed division:

- **different signs** on dividend and divisor: **result should be negated**
- **remainder: same sign as the dividend**

Processor

ALU Controls

Truth Table

ALUOp		Function code						Operation	
ALUOp1	ALUOp0	F5	F4	F3	F2	F1	F0		
0	0	X	X	X	X	X	X	0010	lw, sw
X	1	X	X	X	X	X	X	0110	beq
1	X	X	X	0	0	0	0	0010	R-type Instr.
1	X	X	X	0	0	1	0	0110	
1	X	X	X	0	1	0	0	0000	
1	X	X	X	0	1	0	1	0001	
1	X	X	X	1	0	1	0	0111	

Implementation

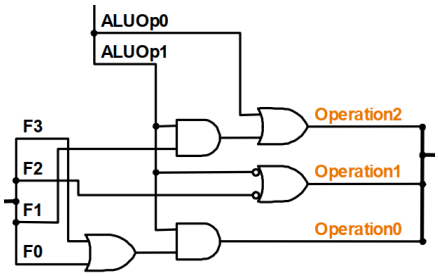

Controls

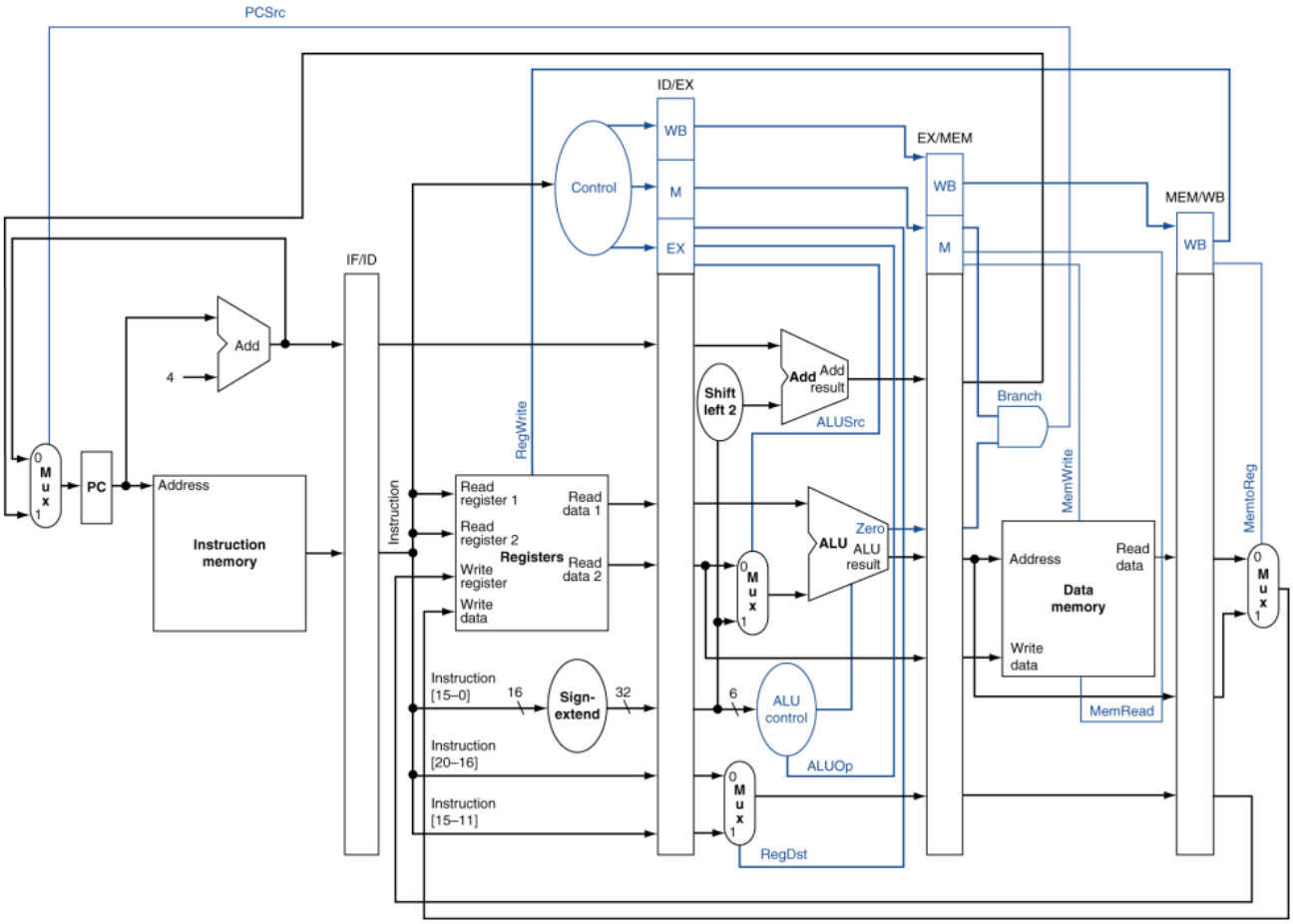

Instructions	EX				MEM			WB	
	RegDst	ALUOp1	ALUOp2	ALUSrc	Branch	MemRead	MemWrite	RegWrite	MemToReg
R-format	1	1	0	0	0	0	0	1	0
lw	0	0	0	1	0	1	0	1	1
sw	X	0	0	1	0	0	1	0	X
beq	X	0	1	0	1	0	0	0	X

Signal name	Effect when deasserted	Effect when asserted
RegDst	The register destination number for the Write register comes from **rt** field (bits 20-16)	The register destination number for the Write register comes from **rd** field (bits 15-11)
RegWrite	None	Enable data write to the register specified by the register destination number
ALUSrc	The second ALU operand comes from the second register file output (Read data port 2).	The second ALU operand is the sign-extended, lower 16 bits of the instruction
PCSrc	The next PC picks up the output of the adder that computes PC+4	The next PC picks up the output of the adder that computes the branch target
MemRead	None	Enable read from memory. Memory contents designated by the address are put on the Read data output
MemWrite	None	Enable write to memory. Overwrite the memory contents designated by the address with the value on the Write data input
MemtoReg	Feed the Write data input of the register file with output from ALU	Feed the Write data input of the register file with output from memory

Hazards

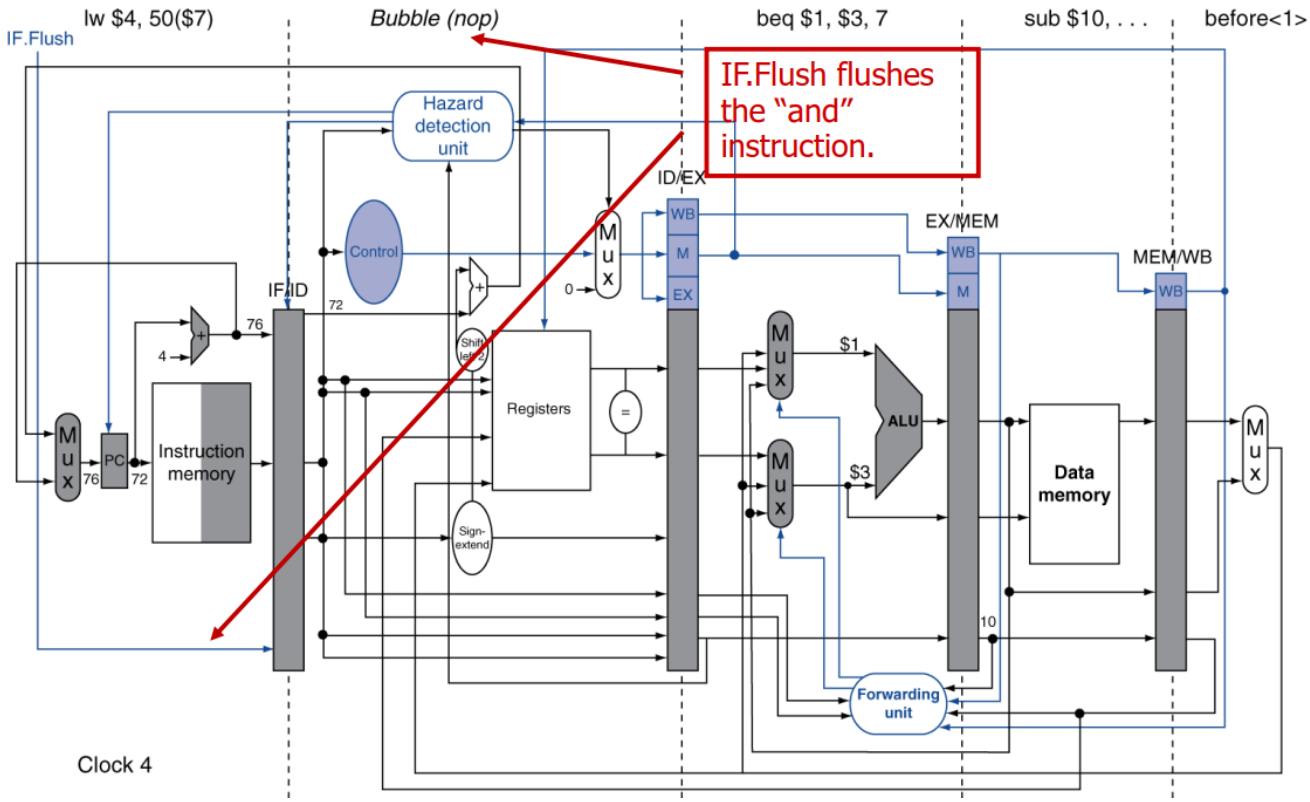

Structural Hazards

- **separate instruction and data** memory/cache
- write in the 1st half (WB, MEM), read in the 2nd half (ID, IF) → **read & write in one clock** cycle

Data Hazards

EX hazard

- EX/MEM.**RegWrite** and (EX/MEM.**Rd ≠ 0**) and (**EX/MEM.Rd = ID/EX.Rs/Rt**)
- Forward A/B = 10

MEM hazard

- MEM/WB.**RegWrite** and (MEM/WB.**Rd ≠ 0**) and (**MEM/WB.Rd = ID/EX.Rs/Rt**) and (**not EX hazard**)
- Forward A/B = 01

Load-Use hazard

- **ID/EX.Rt = IF/ID.Rs/Rt**
- stall and insert bubble: force control values in **ID/EX to 0**, **no update of PC and IF/ID**

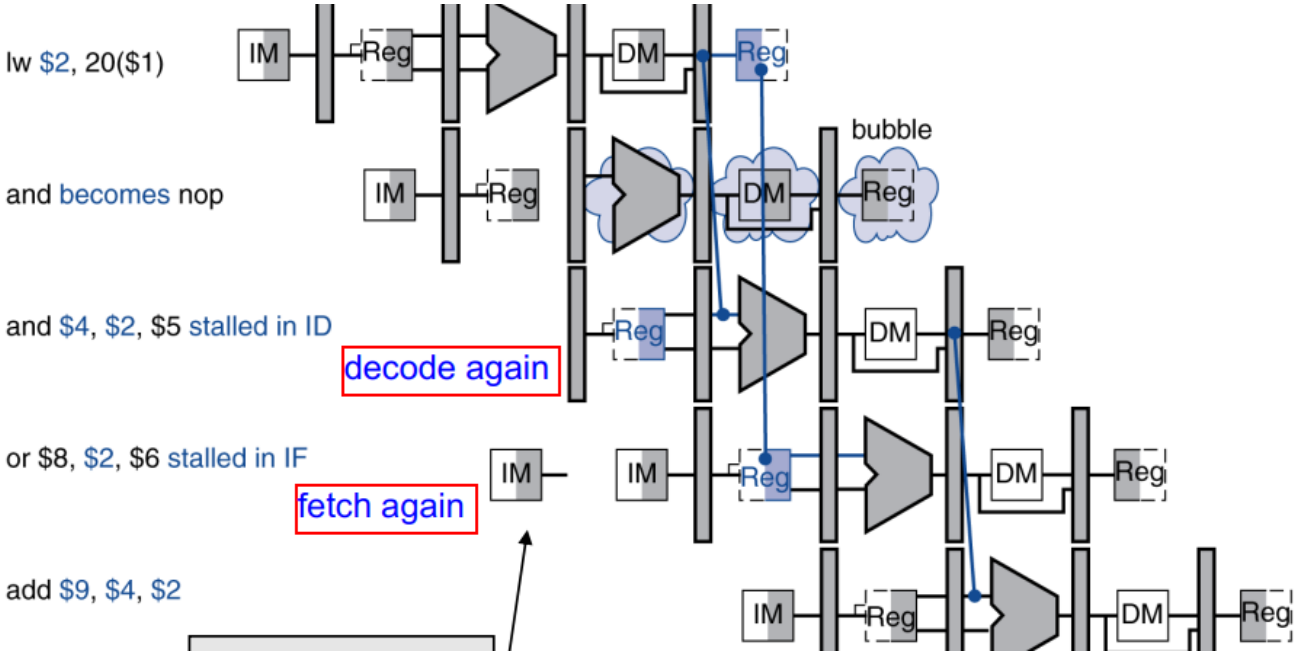

Control Hazards

Branch hazards:

- can make decision: flush the ongoing subsequent instructions, branch to the correct one
- cannot make decision: forwarding and stalls
  - forwarding from ALU: EX/MEM to ID/EX; from load: MEM/WB to ID/EX
  - from preceding ALU or 2nd preceding load: 1 stall
  - from preceding load: 2 stall

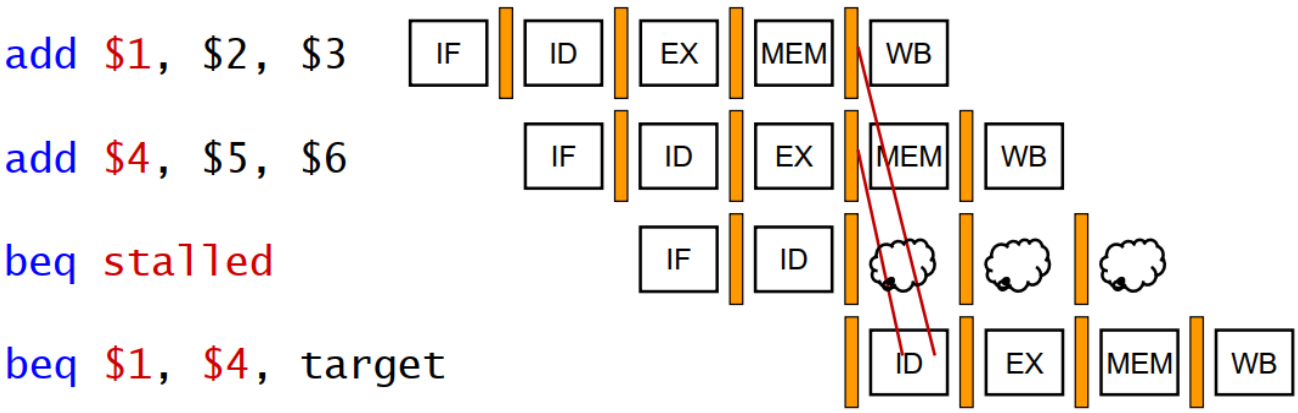

Memory

Hierarchy

SRAM

- Fastest
- Static: read is not destructive
- no need to periodically refresh
- transistors only

DRAM

- Dynamic: **read is destructive**
- need to recharge the capacitors periodically
- data stored in capacitors, read/write enabled in transistors

Disk: non-volatile, rotating magnetic storage

- **Average Read Time**
  = seek time + rotational latency + transfer time + controller delay
  = **seek time + 0.5 / (rpm/60) + sector size / transfer rate + controller overhead**
  = 4ms + 0.5 / (15000/60) + 512B / (100MB/s) + 0.2ms = 6.2ms

Flash: non-volatile, semiconductor storage

Cache

- hit rate = 1 - miss rate
- cache hit time = time to **determine hit/miss** + time to **access the cache**
- cache miss penalty = time to bring a block from lower level to upper level >> cache hit time

Direct-mapped

- **block address** = floor(**memory address / bytes per block**) = tag × number of blocks + index
- index = block address **mod** number of blocks = low-order m bits (if block address is 2^m)
- tag = high-order bits
- memory (byte) address = **tag** (zero-extended) + **index** + **data**
- e.g. 8 cache frames for 8-word (2^5 bytes) blocks: 00 10 110 10001
- **Cache Size**: (e.g. 16KB of data, 8-word blocks, 32-bit address)
  - = **number of blocks × (bits of data per block + bits per tag + 1 valid bit)**
  - number of blocks = **data size / bytes per block** = 16KB / (32 B/block) = 2^9
  - bits of data per block = **8 bit/B × 32 B/block** = 256
  - bits per index = $\log_2$(number of blocks) = 9
  - bits per data = $\log_2$(32 B/block × 1 block) = 5
  - bits per tag = **bits per address - bits per index - bits per data** = 32 - 9 - 5 = 18
  - = 2^9 × (256 + 9 + 5 + 1) = 140800 (bits) = 17.1875 KB
- Average **Memory Access Latency** = **hit time$_1$ + miss rate$_1$ × miss penalty$_1$** = hit time$_1$ + miss rate$_1$ × (hit time$_2$ + miss rate$_2$ × miss penalty$_2$) = hit time$_1$ + miss rate$_1$ × hit time$_2$ + miss rate$_1$ × miss rate$_2$ × miss penalty$_2$ + ...

N-Way Set associative: trade-off between hit rate and hit time

- Each block can be placed in a certain number (N) of cache locations
- Parallel lookup in one cache set

Block address	Cache index	Hit/miss	Cache content after access			
			Set 0		Set 1	
0	0	miss	**Mem[0]**			
8	0	miss	Mem[0]	**Mem[8]**		
0	0	hit	**Mem[0]**	Mem[8]		
6	0	miss	Mem[0]	**Mem[6]**		
8	0	miss	**Mem[8]**	Mem[6]		