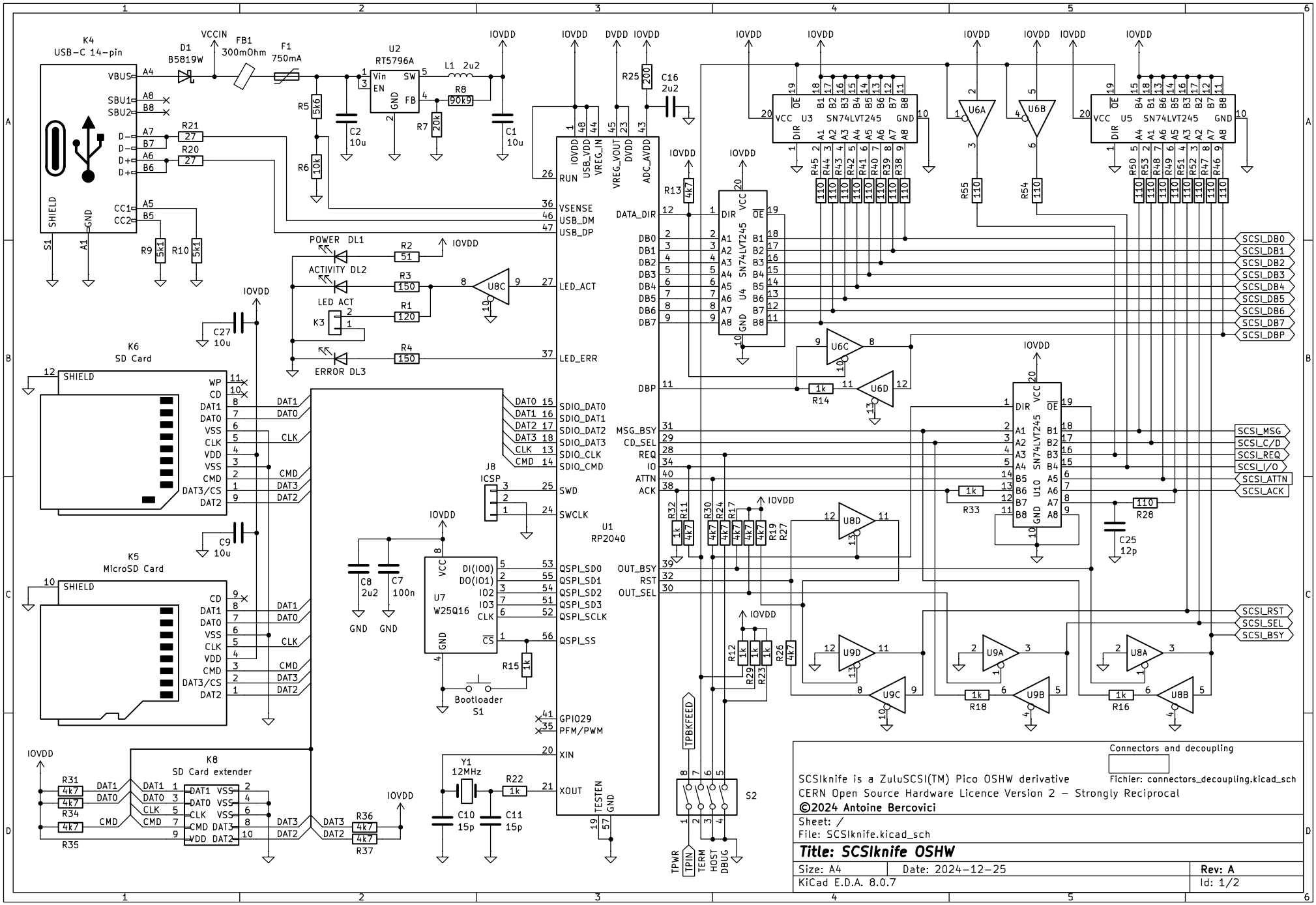
K4
USB-C 14-pin
D1
B5819W
VCCIN
FB1
300mOhm
F1
750mA
U2
RT5796A
L1 2u2
R8 90k9
R7 20k
R5 5k6
R6 10k
C2 10u
C1 10u
R25 200
C16 2u2
IOVDD
DVDD
R21 27
R20 27
R9 5k1
R10 5k1
POWER DL1
R2 51
ACTIVITY DL2
R3 150
LED ACT
R1 120
K3
ERROR DL3
R4 150
U8C
C27 10u
K6
SD Card
C9 10u
K5
MicroSD Card
J8
ICSP
U1
RP2040
U7
W25Q16
C8 2u2
C7 100n
GND
R15 1k
Bootloader
S1
Y1
12MHz
R22 1k
C10 15p
C11 15p
K8
SD Card extender
R31 4k7
R34 4k7
R35 4k7
R36 4k7
R37 4k7
U3 SN74LVT245
U5 SN74LVT245
U4 SN74LVT245
U10 SN74LVT245
U6A
U6B
U6C
U6D
U8D
U9D
U9C
U9A
U9B
U8A
U8B
R45 110
R44 110
R43 110
R42 110
R41 110
R40 110
R39 110
R38 110
R50 110
R53 110
R48 110
R49 110
R51 110
R52 110
R47 110
R46 110
R55 110
R54 110
R13 4k7
R14 1k
R33 1k
R28 110
C25 12p
R32 1k
R11 4k7
R30 4k7
R24 4k7
R17 4k7
R19 4k7
R27
R12 1k
R29 1k
R23 1k
R26 4k7
R18 1k
R16 1k
TPBKFEED
S2
TPWR
TPIN
TERM
HOST
DBUG
SCSI_DB0
SCSI_DB1
SCSI_DB2
SCSI_DB3
SCSI_DB4
SCSI_DB5
SCSI_DB6
SCSI_DB7
SCSI_DBP
SCSI_MSG
SCSI_C/D
SCSI_REQ
SCSI_I/O
SCSI_ATTN
SCSI_ACK
SCSI_RST
SCSI_SEL
SCSI_BSY
Connectors and decoupling
SCSIknife is a ZuluSCSI(TM) Pico OSHW derivative
CERN Open Source Hardware Licence Version 2 – Strongly Reciprocal
©2024 Antoine Bercovici
Fichier: connectors_decoupling.kicad_sch
Sheet: /
File: SCSIknife.kicad_sch
Title: SCSIknife OSHW
Size: A4
Date: 2024-12-25
Rev: A
KiCad E.D.A. 8.0.7
Id: 1/2

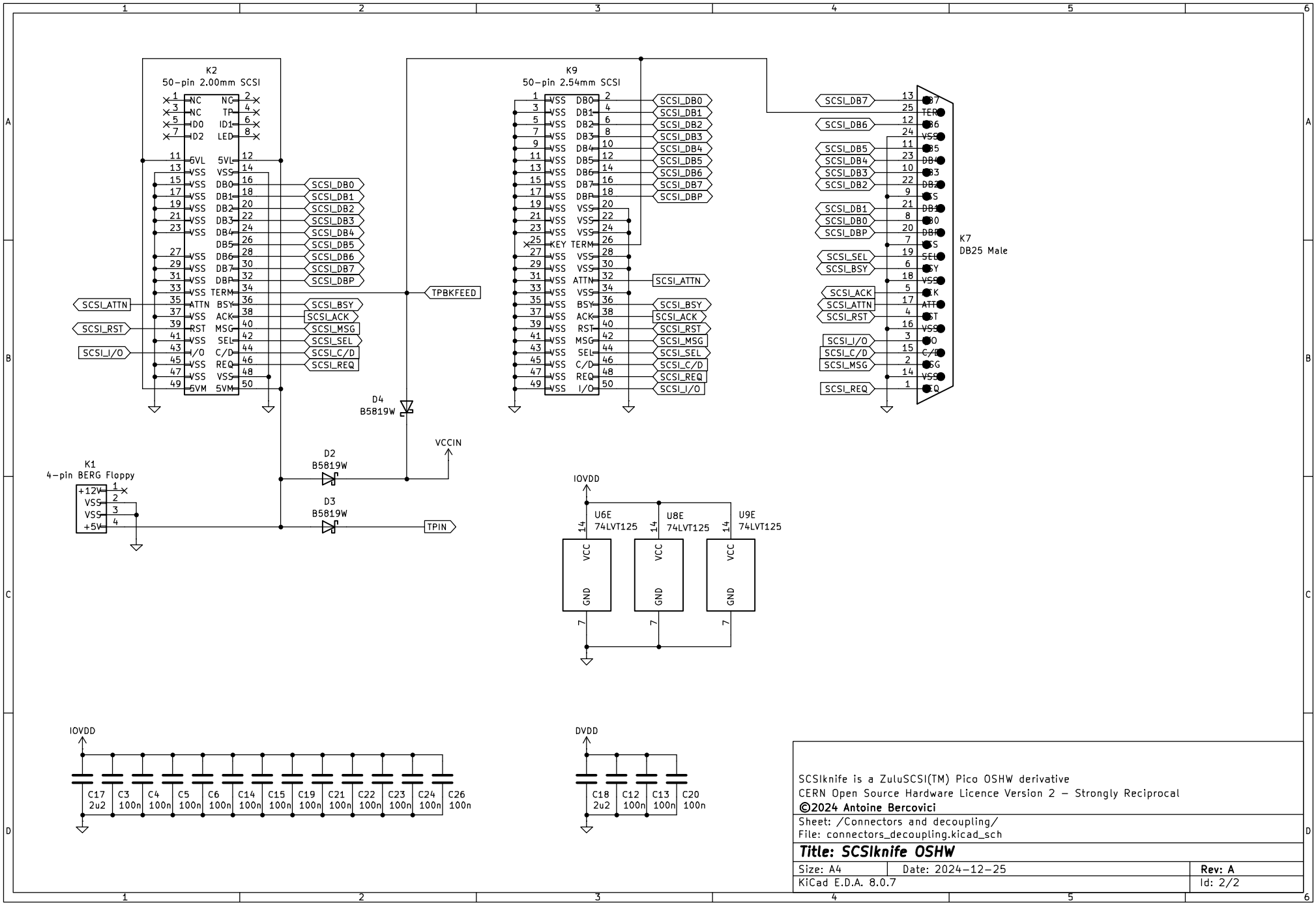

SCSIknife is a ZuluSCSI(TM) Pico OSHW derivative
CERN Open Source Hardware Licence Version 2 – Strongly Reciprocal
©2024 Antoine Bercovici

Sheet: /Connectors and decoupling/
File: connectors_decoupling.kicad_sch

Title: SCSIknife OSHW

Size: A4	Date: 2024-12-25	**Rev: A**
KiCad E.D.A. 8.0.7		Id: 2/2