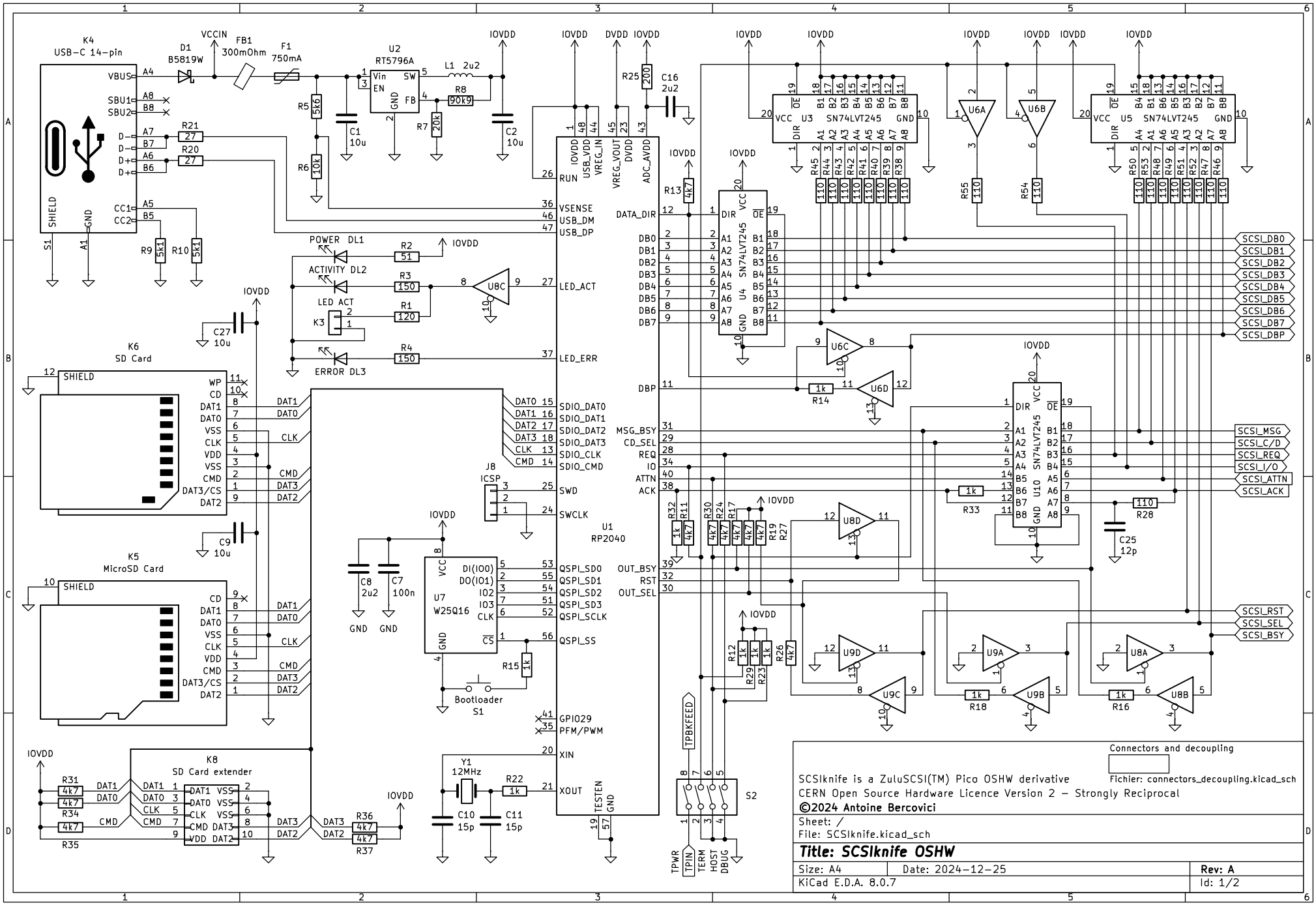
K4
USB-C 14-pin
D1
B5819W
VCCIN
FB1
300mOhm
F1
750mA
U2
RT5796A
L1 2u2
R5 5k6
R6 10k
R7 20k
R8 90k9
C1 10u
C2 10u
R21 27
R20 27
R9 5k1
R10 5k1
IOVDD
DVDD
R25 200
C16 2u2
U3 SN74LVT245
U4 SN74LVT245
U5 SN74LVT245
U10 SN74LVT245
U6A
U6B
U6C
U6D
U8A
U8B
U8C
U8D
U9A
U9B
U9C
U9D
R45 R44 R43 R42 R41 R40 R39 R38
R50 R53 R48 R49 R51 R52 R47 R46
R55
R54
R13 4k7
DATA_DIR
DB0
DB1
DB2
DB3
DB4
DB5
DB6
DB7
DBP
MSG_BSY
CD_SEL
REQ
IO
ATTN
ACK
OUT_BSY
RST
OUT_SEL
SCSI_DB0
SCSI_DB1
SCSI_DB2
SCSI_DB3
SCSI_DB4
SCSI_DB5
SCSI_DB6
SCSI_DB7
SCSI_DBP
SCSI_MSG
SCSI_C/D
SCSI_REQ
SCSI_I/O
SCSI_ATTN
SCSI_ACK
SCSI_RST
SCSI_SEL
SCSI_BSY
R14 1k
R33 1k
R28 110
C25 12p
R32 1k
R11 4k7
R30 4k7
R24 4k7
R17 4k7
R19 4k7
R27
R12 1k
R29 1k
R23 1k
R26 4k7
R18 1k
R16 1k
POWER DL1
R2 51
ACTIVITY DL2
R3 150
LED ACT
R1 120
K3
ERROR DL3
R4 150
LED_ACT
LED_ERR
C27 10u
K6
SD Card
SHIELD
WP
CD
DAT1
DAT0
VSS
CLK
VDD
VSS
CMD
DAT3/CS
DAT2
C9 10u
K5
MicroSD Card
SDIO_DAT0
SDIO_DAT1
SDIO_DAT2
SDIO_DAT3
SDIO_CLK
SDIO_CMD
J8
ICSP
SWD
SWCLK
U1
RP2040
C8 2u2
C7 100n
GND
U7
W25Q16
DI(IO0)
DO(IO1)
IO2
IO3
CS
QSPI_SD0
QSPI_SD1
QSPI_SD2
QSPI_SD3
QSPI_SCLK
QSPI_SS
R15 1k
Bootloader
S1
GPIO29
PFM/PWM
XIN
XOUT
Y1
12MHz
R22 1k
C10 15p
C11 15p
TESTEN
K8
SD Card extender
R31 4k7
R34 4k7
R35 4k7
R36 4k7
R37 4k7
TPBKFEED
S2
TPWR
TPIN
TERM
HOST
DBUG
Connectors and decoupling
Fichier: connectors_decoupling.kicad_sch
SCSIknife is a ZuluSCSI(TM) Pico OSHW derivative
CERN Open Source Hardware Licence Version 2 – Strongly Reciprocal
©2024 Antoine Bercovici
Sheet: /
File: SCSIknife.kicad_sch
Title: SCSIknife OSHW
Size: A4
Date: 2024-12-25
Rev: A
KiCad E.D.A. 8.0.7
Id: 1/2

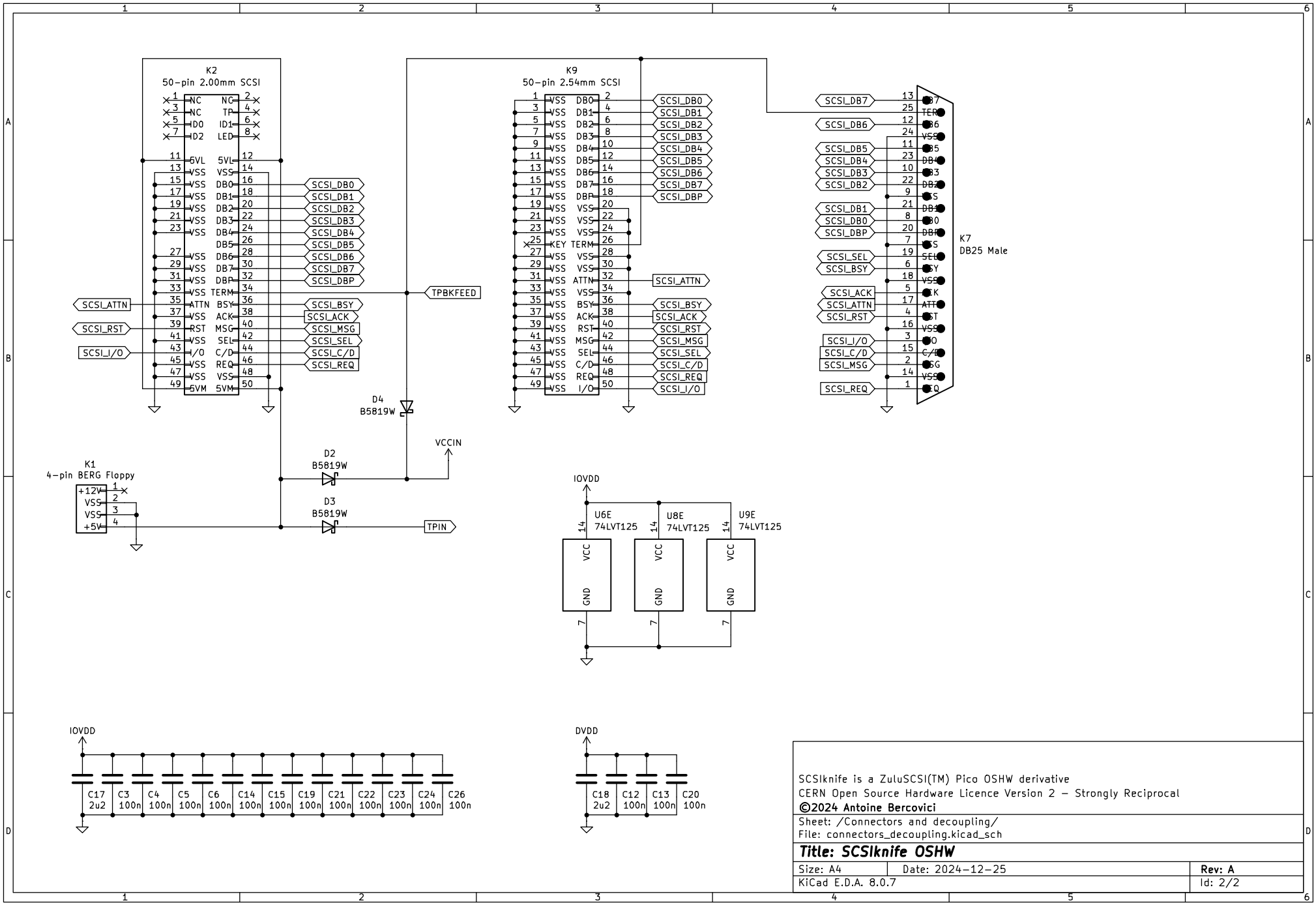

SCSIknife is a ZuluSCSI(TM) Pico OSHW derivative
CERN Open Source Hardware Licence Version 2 – Strongly Reciprocal
©2024 Antoine Bercovici

Sheet: /Connectors and decoupling/
File: connectors_decoupling.kicad_sch

Title: SCSIknife OSHW

Size: A4	Date: 2024-12-25	**Rev: A**
KiCad E.D.A. 8.0.7		Id: 2/2