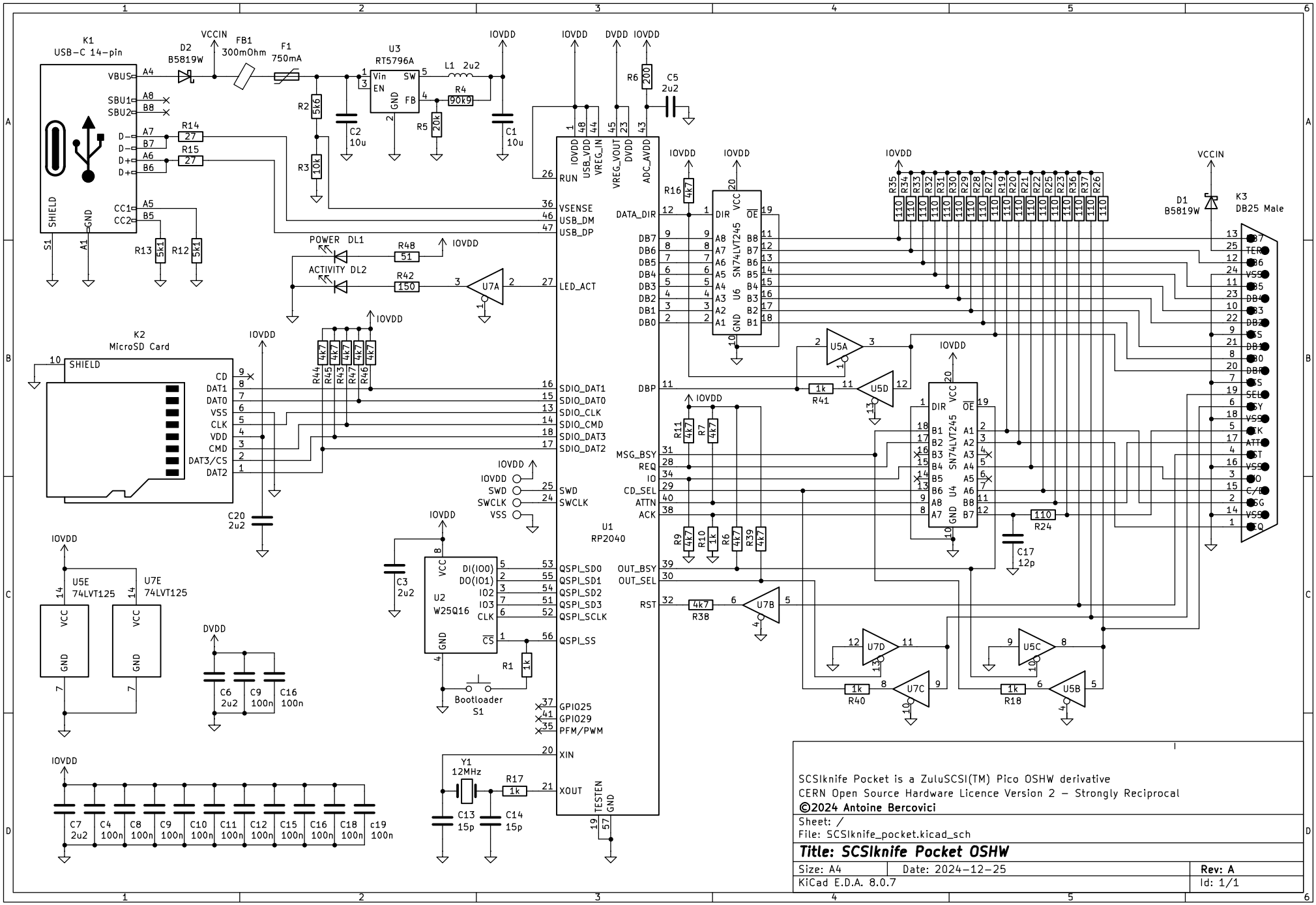
K1
USB-C 14-pin
D2
B5819W
VCCIN
FB1
300mOhm
F1
750mA
U3
RT5796A
L1 2u2
R4 90k9
R5 20k
R2 5k6
R3 10k
C2 10u
C1 10u
IOVDD
DVDD
R6 200
C5 2u2
R14 27
R15 27
R13 5k1
R12 5k1
POWER DL1
ACTIVITY DL2
R48 51
R42 150
U7A
K2
MicroSD Card
R44 4k7
R45 4k7
R43 4k7
R47 4k7
R46 4k7
C20 2u2
U5E
74LVT125
U7E
74LVT125
C6 2u2
C9 100n
C16 100n
C3 2u2
U2
W25Q16
R1 1k
Bootloader
S1
U1
RP2040
Y1
12MHz
R17 1k
C13 15p
C14 15p
C7 2u2
C4 100n
C8 100n
C9 100n
C10 100n
C11 100n
C12 100n
C15 100n
C16 100n
C18 100n
c19 100n
R16 4k7
U6
SN74LVT245
U5A
U5D
R41 1k
R11 4k7
R7 4k7
R9 4k7
R10 1k
R6 4k7
R39 4k7
R38 4k7
U7B
U7D
U7C
R40 1k
U5C
U5B
R18 1k
U4
SN74LVT245
R24 110
C17 12p
D1
B5819W
K3
DB25 Male
SCSIknife Pocket is a ZuluSCSI(TM) Pico OSHW derivative
CERN Open Source Hardware Licence Version 2 – Strongly Reciprocal
©2024 Antoine Bercovici
Sheet: /
File: SCSIknife_pocket.kicad_sch
Title: SCSIknife Pocket OSHW
Size: A4
Date: 2024-12-25
Rev: A
KiCad E.D.A. 8.0.7
Id: 1/1