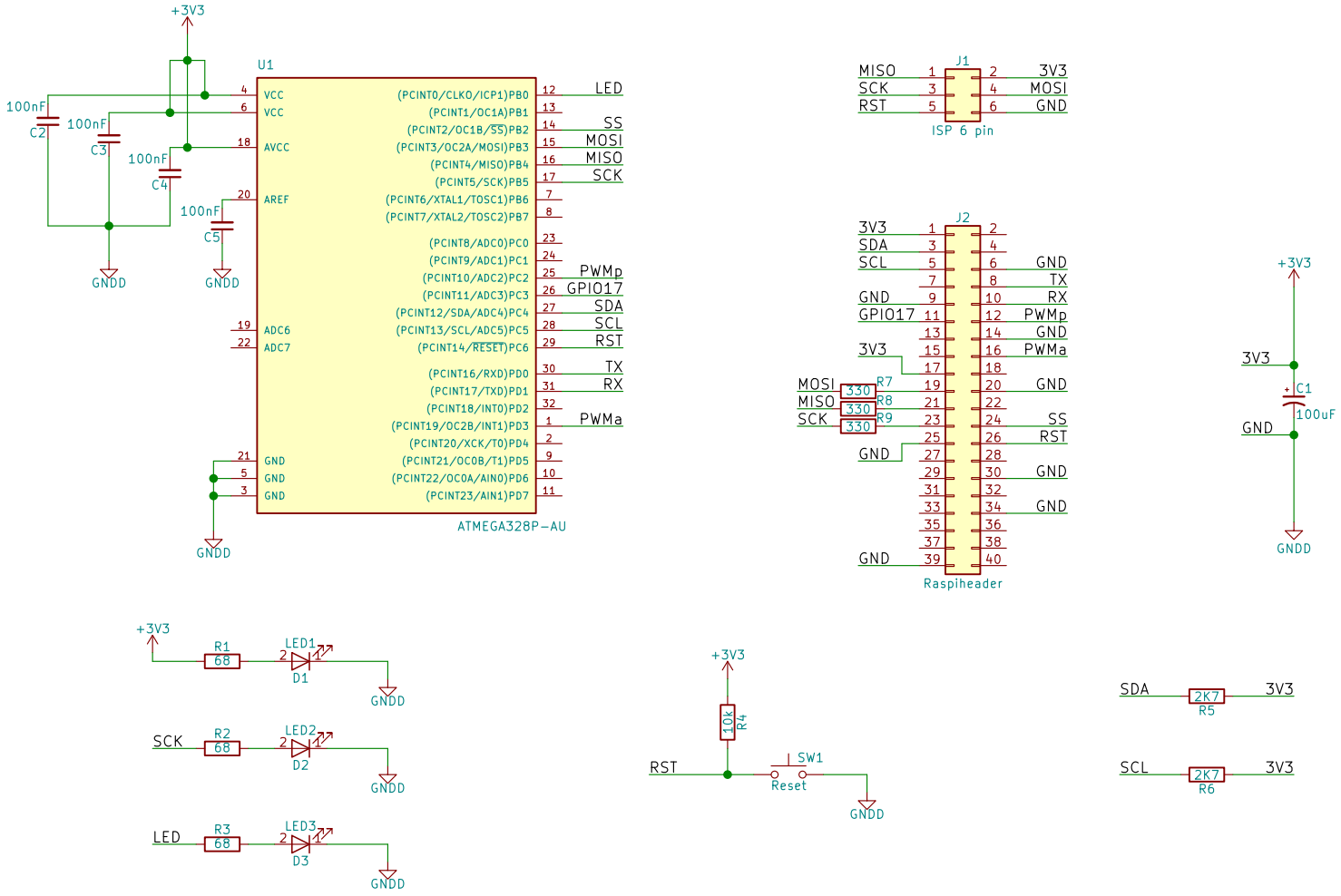
+3V3
U1
100nF
C2
100nF
C3
100nF
C4
100nF
C5
GNDD
VCC
VCC
AVCC
AREF
ADC6
ADC7
GND
GND
GND
(PCINT0/CLKO/ICP1)PB0
(PCINT1/OC1A)PB1
(PCINT2/OC1B/SS)PB2
(PCINT3/OC2A/MOSI)PB3
(PCINT4/MISO)PB4
(PCINT5/SCK)PB5
(PCINT6/XTAL1/TOSC1)PB6
(PCINT7/XTAL2/TOSC2)PB7
(PCINT8/ADC0)PC0
(PCINT9/ADC1)PC1
(PCINT10/ADC2)PC2
(PCINT11/ADC3)PC3
(PCINT12/SDA/ADC4)PC4
(PCINT13/SCL/ADC5)PC5
(PCINT14/RESET)PC6
(PCINT16/RXD)PD0
(PCINT17/TXD)PD1
(PCINT18/INT0)PD2
(PCINT19/OC2B/INT1)PD3
(PCINT20/XCK/T0)PD4
(PCINT21/OC0B/T1)PD5
(PCINT22/OC0A/AIN0)PD6
(PCINT23/AIN1)PD7
LED
SS
MOSI
MISO
SCK
PWMp
GPIO17
SDA
SCL
RST
TX
RX
PWMa
ATMEGA328P-AU
J1
MISO
SCK
RST
3V3
MOSI
GND
ISP 6 pin
J2
3V3
SDA
SCL
GND
GPIO17
3V3
MOSI
MISO
SCK
GND
GND
TX
RX
PWMp
GND
PWMa
GND
SS
RST
GND
GND
GND
R7
R8
R9
330
330
330
Raspiheader
+3V3
3V3
C1
100uF
GND
GNDD
+3V3
R1
68
LED1
D1
GNDD
SCK
R2
68
LED2
D2
GNDD
LED
R3
68
LED3
D3
GNDD
+3V3
10k
R4
RST
SW1
Reset
GNDD
SDA
2K7
R5
3V3
SCL
2K7
R6
3V3