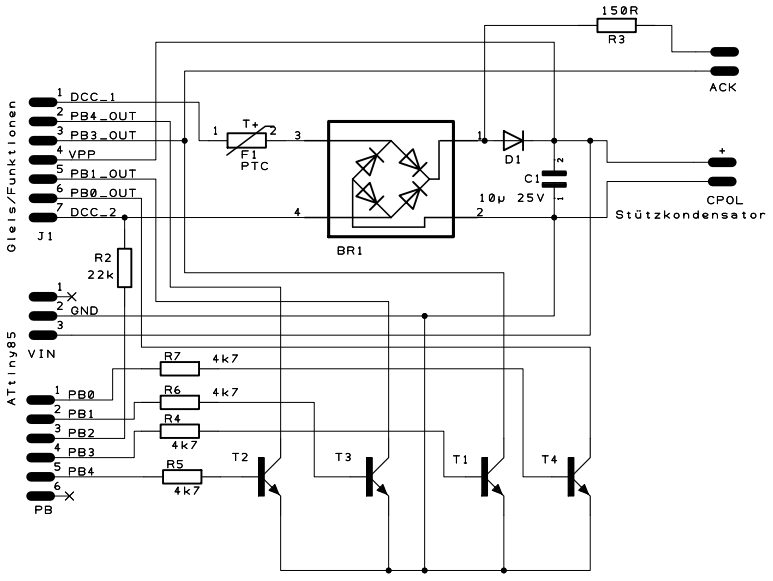

PROJECT:	ATtiny-DCC-Dekoder (zu Digispark)		Sim&IT
DRAWING TITLE:	ATtiny-MuFu4P		
DRAWN BY:	M.Hochmuth	REVISION: 1.0	
SHEET: OF	STATUS:		
DATE: 14.04.2026			