Final Examination Paper

Botswana International University of Science & Technology
Faculty of Engineering and Technology

Department of Mechanical, Energy and Industrial Engineering

End of Semester One Examination 2022-2023

Course Code: MCTE 521
Course or Module Title: Robot Motion Planning
Date & Time of Examination: Monday, 21 November 2022, 1400-1600 HRS
Venue of Examination: Block 114/001-002

Time allowed: 2 hours and 00 minutes

Total marks: 105 points

The following items are provided:

- One Examination Paper with five (5) printed pages in total inclusive of cover page
- Formulas are given in examination paper

Candidates are permitted to bring into the examination room:

- Calculator
- Pens

Candidates must answer all questions.

The paper consists of three (3) problem solving assessments.

- All answers and rough work must be written in the answer book(s) provided.
- A line should be drawn through any rough work to indicate to the examiner that it is not part of the work to be graded.
- Black or Blue pen only must be used for written answers and pencil for all drawings and sketches.
- Ensure you have the correct number of pages on your examination question paper.
- No mobile phones allowed in examination room.

Start of Exam

1. Denavit-Hartenberg (D-H) Convention and Parameters – 35 points

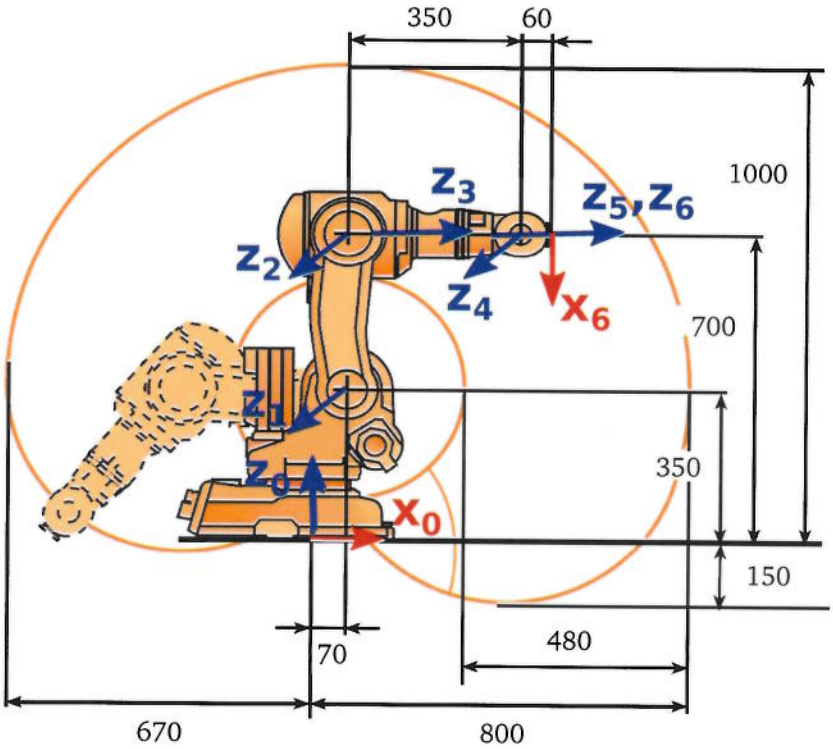

Figure 1: A 6-revolute-joint ABB robot

a. [10 pts] Draw the robot in your answer sheet and assign the reference frames for each joint. Label the z_i- and x_i- axes and mark the origin of each reference frame by encircling it with a small circle.

b. [10 pts] In your answer sheet, make a table of the D-H Parameters.

c. [15 pts] Using the joint angles $\theta = [0, 90, -90, 90, 0, 0, 180]$ degrees, compute the position of joint 4, that is, ${}^0p_3$. (Note: convert lengths into meters and angles into radians.)

$$ {}^{i-1}A_i = \begin{bmatrix} {}^{i-1}\mathbf{R}_i & {}^{i-1}\mathbf{p}_i \\ \mathbf{0} & 1 \end{bmatrix} = \begin{bmatrix} {}^{i-1}\mathbf{x}_i & {}^{i-1}\mathbf{y}_i & {}^{i-1}\mathbf{z}_i & {}^{i-1}\mathbf{p}_i \\ 0 & 0 & 0 & 1 \end{bmatrix}. \tag{1} $$

2. Forward Kinematics – 35 points

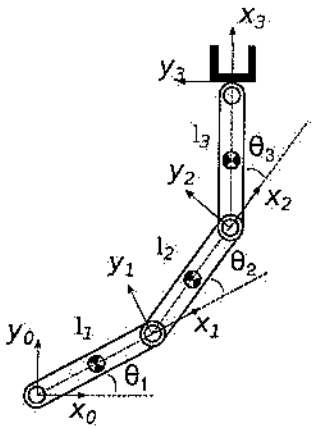

Figure 2: A three degrees-of-freedom planar robot with revolute joints.

a. [25 pts] Given a 3-link planar robot with $l_1 = 0.3\,m$; $l_2 = 0.3\,m$; $l_3 = 0.3\,m$, and joint angles as $\theta = [\theta_1 = 30,\ \theta_2 = 30,\ \theta_3 = 30]^T$ deg with end-effector desired location at $[x, y] = [0.5, 0.5]$. Given the forward kinematics equations as

$$x = l_1\cos(\theta_1) + l_2\cos(\theta_1+\theta_2) + l_3\cos(\theta_1+\theta_2+\theta_3) \tag{2}$$
$$y = l_1\sin(\theta_1) + l_2\sin(\theta_1+\theta_2) + l_3\sin(\theta_1+\theta_2+\theta_3), \tag{3}$$

find the Jacobian $\mathbf{J}$ of the 3-link planar robot by

$$\mathbf{J} = \frac{\partial \mathbf{x}}{\partial \mathbf{q}} \tag{4}$$

where $\mathbf{x} = [x, y]^T$ and $\mathbf{q} = [\theta_1, \theta_2, \theta_3]^T$. Move towards the desired location using

$$\mathbf{q} = \mathbf{q} + \partial\mathbf{q} \tag{5}$$

where

$$\partial\mathbf{q} = \mathbf{J}^T k_p(\mathbf{x}_d - \mathbf{x}) \tag{6}$$

and $k_p = 0.1$. We use the transpose of a matrix instead of the inverse for ease of computation. Do this for steps 1 and 2.

b. [10 pts] Given the rotation matrices

$$R_{x,\alpha} = \begin{bmatrix} 1 & 0 & 0 \\ 0 & \cos\alpha & -\sin\alpha \\ 0 & \sin\alpha & \cos\alpha \end{bmatrix} \quad R_{y,\phi} = \begin{bmatrix} \cos\phi & 0 & \sin\phi \\ 0 & 1 & 0 \\ -\sin\phi & 0 & \cos\phi \end{bmatrix} \quad R_{z,\theta} = \begin{bmatrix} \cos\theta & -\sin\theta & 0 \\ \sin\theta & \cos\theta & 0 \\ 0 & 0 & 1 \end{bmatrix}$$

i. [10 pts] Find the resultant rotation matrix that represents a rotation of $\phi = 30$ deg about the OY axis of frame $\{0\}$ to frame $\{1\}$, followed by a rotation of $\theta = 45$ deg about the OW axis of frame $\{1\}$ to frame $\{2\}$ and a rotation of $\alpha = 60$ deg about the OU axis of frame $\{2\}$ to frame $\{3\}$.

ii. [5 pts] From item (i) and given vectors ${}^0c = [3,4,6]^T$, ${}^1d = [6,4,-2]^T$, and ${}^3e = [5,-5,7]^T$, sum all vectors in frame $\{2\}$.

3. Robot Jacobian – 35 points

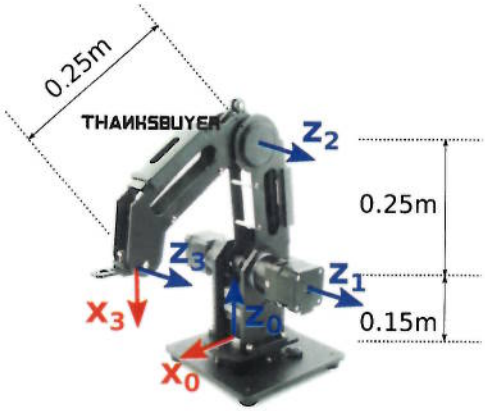

Figure 3: A three degrees-of-freedom robot in 3D space with revolute joints.

a. [5 points] Assign frames and find the D-H Parameters of the robot above.

b. [15 pts] Compose the Jacobian matrix, $J = [j_1 \;\; j_2 \;\; j_3]$, by considering position part of Jacobian (and ignoring orientation part) at $\theta = [0,-60,60]$ degrees, where

$$j_i = \left[{}^0z_{i-1} \times {}^0R_{i-1}{}^{i-1}p_n\right] \tag{7}$$

such that the cross product of two vectors can be written as

$$a \times b = \begin{bmatrix} 0 & -a_3 & a_2 \\ a_3 & 0 & -a_1 \\ -a_2 & a_1 & 0 \end{bmatrix} \begin{bmatrix} b_1 \\ b_2 \\ b_3 \end{bmatrix}. \tag{8}$$

c. [15 pts] The desired position is $p_d = [x_d, y_d, z_d] = [-0.25, 0.25, 0.25]$. Use the Jacobian computed above starting from initial robot configuration, compute steps 1 and 2 of new joint angles θ by the following equations

$$\Delta\theta = J^T k_p * (p_d - {}^0p_3) \tag{9}$$

$$\theta = \theta + \Delta\theta \tag{10}$$

where $k_p = 0.1$. We use the transpose of a matrix instead of the inverse for ease of computation. Do this for steps 1 and 2.

End of Exam

DH Parameters (Better Description)

1. Joint-i rotates about z_{i-1}
2. Axis x_i is the common normal and intersecting both z_i and z_{i-1}
3. Axis y_i completes the right-hand coordinate system

A better DH parameters description – arranged by Rodrigo Jamisola

θ_i : about z_{i-1} from x_{i-1} to x_i

α_i : about x_i from z_{i-1} to z_i

d_i : along z_{i-i} from origin of $\{i-1\}$ frame to intersection of z_{i-1} and x_i

a_i : along x_i from intersection of z_{i-1} and x_i to origin of $\{i\}$ frame

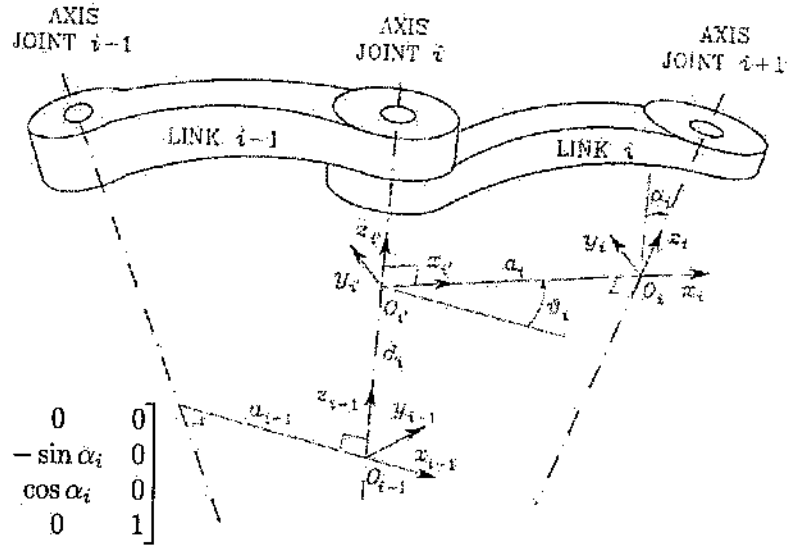

$$
{}^{i-1}\mathbf{A}_i = \mathbf{T}_{z,d}\mathbf{T}_{z,\theta}\mathbf{T}_{x,a}\mathbf{T}_{x,\alpha}
$$

$$
= \begin{bmatrix} 1 & 0 & 0 & 0 \\ 0 & 1 & 0 & 0 \\ 0 & 0 & 1 & d_i \\ 0 & 0 & 0 & 1 \end{bmatrix}
\begin{bmatrix} \cos\theta_i & -\sin\theta_i & 0 & 0 \\ \sin\theta_i & \cos\theta_i & 0 & 0 \\ 0 & 0 & 1 & 0 \\ 0 & 0 & 0 & 1 \end{bmatrix}
\begin{bmatrix} 1 & 0 & 0 & a_i \\ 0 & 1 & 0 & 0 \\ 0 & 0 & 1 & 0 \\ 0 & 0 & 0 & 1 \end{bmatrix}
\begin{bmatrix} 1 & 0 & 0 & 0 \\ 0 & \cos\alpha_i & -\sin\alpha_i & 0 \\ 0 & \sin\alpha_i & \cos\alpha_i & 0 \\ 0 & 0 & 0 & 1 \end{bmatrix}
$$

$$
= \begin{bmatrix} \cos\theta_i & -\cos\alpha_i\sin\theta_i & \sin\alpha_i\sin\theta_i & a_i\cos\theta_i \\ \sin\theta_i & \cos\alpha_i\cos\theta_i & -\sin\alpha_i\cos\theta_i & a_i\sin\theta_i \\ 0 & \sin\alpha_i & \cos\alpha_i & d_i \\ 0 & 0 & 0 & 1 \end{bmatrix}
$$