BOTSWANA INTERNATIONAL UNIVERSITY OF SCIENCE & TECHNOLOGY

BOTSWANA INTERNATIONAL UNIVERSITY OF SCIENCE & TECHNOLOGY
(SEMESTER I, 2023/2024 FINAL EXAMINATIONS)

FACULTY/DEPARTMENT:	FET, Department of Electrical, Computer and Telecommunications Engineering
MODULE CODE:	CTEN 415
MODULE TITLE:	Microcontrollers
DATE:	22nd November 2023
TIME:	18:00-20:00 (2 hours) plus 10 minutes reading time
VENUE(s):	BLOCK 122/003-004
EXAMINER(s):	Dr Boyce Sigweni

ADDITIONAL MATERIALS: PIC24 Instruction Set Summary

Instructions to Candidates:

1. This question paper contains a total of 5 pages (including this page).
2. There are 4 questions in this question paper:

   Total Marks: 100

3. Answer all questions.
4. All work **including rough work** should be done in the answer booklet(s) provided. Cross out any rough work and indicate it as such to avoid it being marked.
5. Use only a Blue or Black pen for written answers and a pencil for all sketches/ drawings.
6. Ensure that your question paper contains all pages.
7. Only non-programmable calculators are allowed in this examination.
8. Possession of any other material not prescribed in these instructions including mobile phones/smart watches is a punishable offence as per the BIUST Misconduct Regulation.

DO NOT TURN OVER THE PAGE UNTIL YOU ARE TOLD TO DO SO

Question 1

1. Outline the key differences between a microcontroller (μC) and a microprocessor (μP). (4 marks)

2. Use PIC24 Core (Simplified) block diagram to show program flow and to explain how the instruction register loaded. (5 marks)

3. Discuss the watchdog timer operation and uses (5 marks)

4. Outline any **two (2)** main addressing modes of PIC24 series and give an example for each mode provided. (4 marks)

5. Give the final value of **i8_p** in the following code segment assuming the sign bit is preserved.

```
int8 i8_p
i8_p = 0xA0 >> 3
```

(2 marks)

6. With a 60 MHz clock (FOSC), how long does it take to execute the following instructions?

```
        add W3, W2, W1        1
mov #0x00, W0                 1
        cp.0 W0               1
        bra GTU, labelNoAdd:  2
labelNoAdd: mov WREG, u16_a   1
```

Give the answer in **nanoseconds; do NOT round to the nearest nanosecond!** For reference, 1 MHz has a period = 1 μs = 1000 ns. 1μs=10-6 s, 1ns=10-9 s, 1MHz=106 Hz.

(5 marks)

PLEASE TURN OVER THE PAGE

Question 2

1. Consider the table below and give the contents of each register(s) after the instruction has been executed.

Address	Contents
W0	0x1000
W1	0x1002
W2	0x1004
W15	0x1006
0x1004	0x2AFB
0x1006	0x8FCD

Instruction	Modified Register	New Value
`mov.b W1, [W2]`		
`push W0`		
`mov.b W2, [W0++]`		
`pop W0`		
`mov [--W1], W1`		

(10 marks)

2. Use the memory/register contents below and initial C and Z values at the **START** of each instruction. After the instruction is executed, give the new values of any modified register or memory contents as well as the new C and Z values. When the modified item is a memory value, always give the 16-bit value, so the address should always be even.

Address	Data
W0	0x2F2B
W1	0x45A1
W2	0x09B2
W3	0x808A

Address	Data
0x1000	0x763D
0x1002	0x4820
0x1004	0x781B
0x1006	0xCB3A

Assume Z = True, C = False initially.

Instruction	Modified register	New value	Z flag bit	C flag bit
add W2,W2,W3				
mov.b 0x1003,WREG				
ior W3, W1, W1				
ze W1, W0				
and W1, W3, W1				
lsr.b W2, W1				

(15 marks)

PLEASE TURN OVER THE PAGE

Question 3

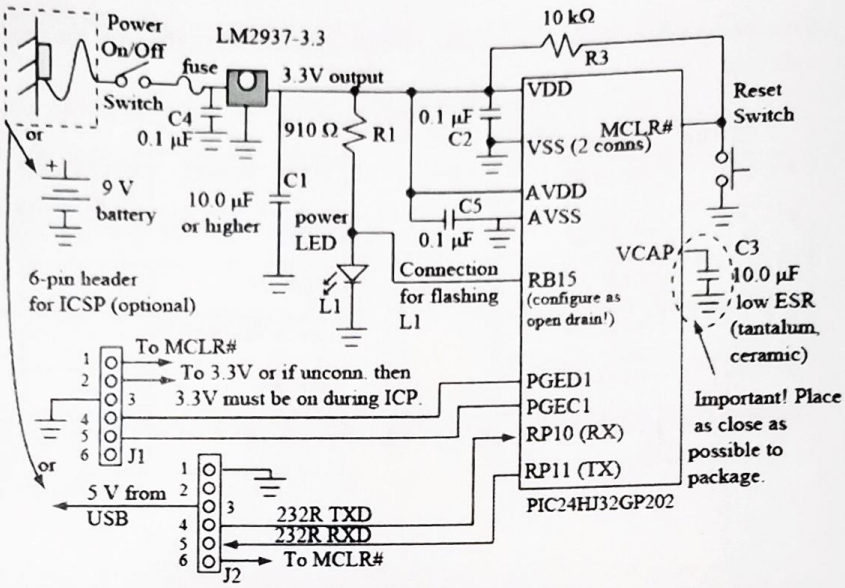

Figure 1: PIC24 Initial Hookup Schematic

1. Refer to the initial hookup schematic for the PIC24 µC diagram above to answer the following questions:
   a. What is the purpose of the 10 kΩ resistor labeled as R3?
   b. What is the purpose of the .1 µF capacitor labeled as C2?
   c. Assuming the voltage drop across the L1 LED is 2 volts, what is the current flowing through resistor R1 when the LED is on.

   (4 marks)

2. With aid of diagrams outline the initial hookup schematic for the PIC24 µC, and discuss:
   a. Power. (2 marks)
   b. Reset. (2 marks)
   c. Communication channel. (3 marks)

3. Discuss the power saving modes (sleep, idle, doze). (6 marks)

4. Outline the difference between LATx and PORTx in terms of reading and writing.

   (4 marks)

5. Configure RB4 as an open-drain output, then write a '1' to it.

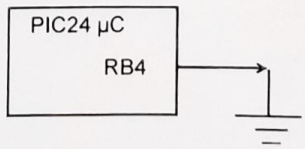

   a. Determine the value that would be read from _RB4 and justify. (2 marks)
   b. Determine the value that would be read from _LATB4 and justify. (2 marks)

PLEASE TURN OVER THE PAGE

Question 4

1. Convert the following C code fragments to PIC24 assembly. Assume the variables used have already been declared; for example, the use of the variable u16_b implies a uint16_t u16_b declaration earlier in the code.

```
if (!u8_y && u16_k) {
   ++u16_k;
   i16_i = ((i16_k + (int16) i8_q >> 2) & 0x8B23
 } else {
   u8_y—;
}
```

(12 marks)

2. Using any PIC microcontroller of your choice provide the following for a Blinking LED project:
   a. Flow chart and pseudocode (4 marks)
   b. Code (C or Assembly) (6 marks)
   c. Circuit (3 marks)

END OF EXAM