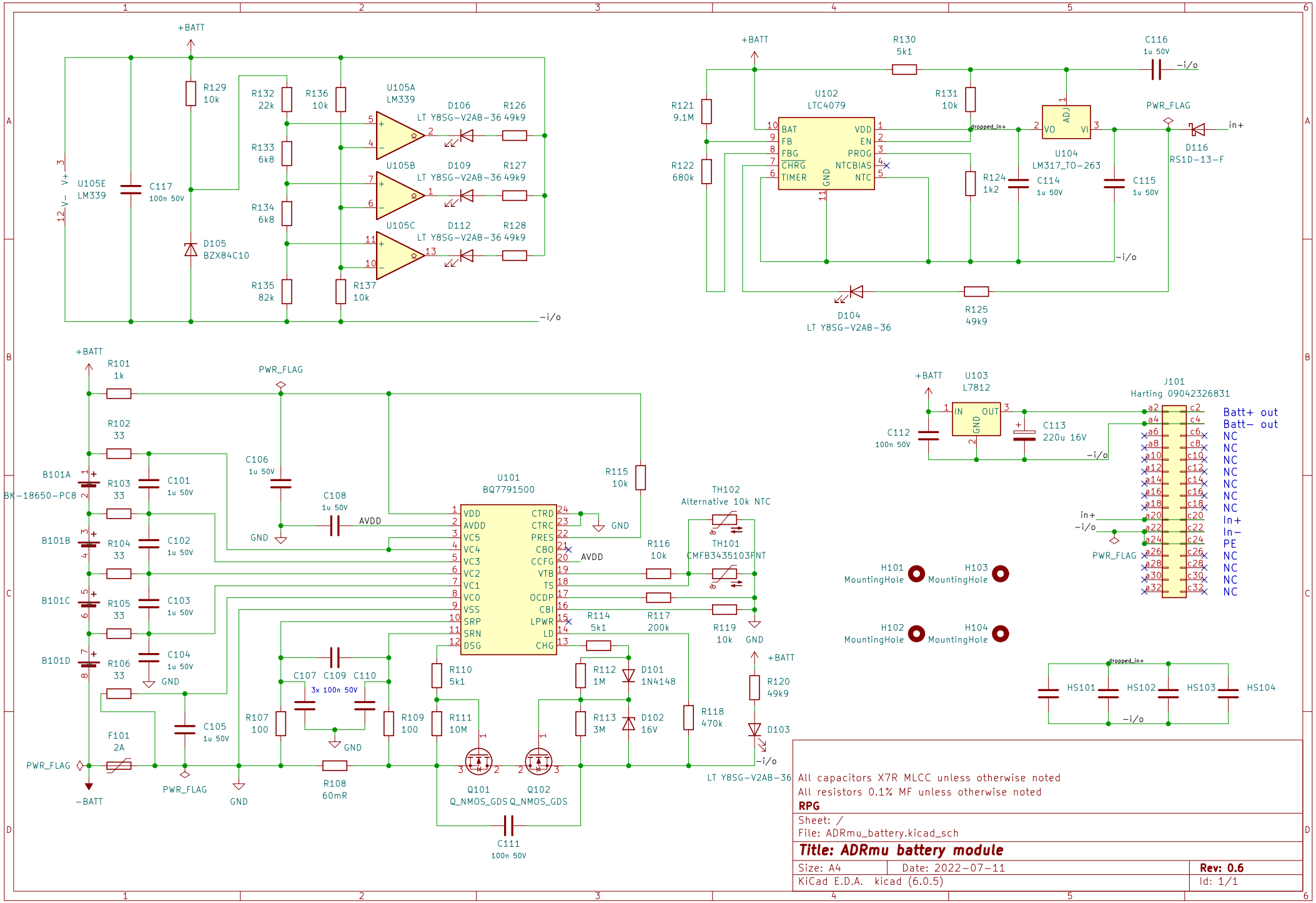

All capacitors X7R MLCC unless otherwise noted
All resistors 0.1% MF unless otherwise noted

RPG

Sheet: /
File: ADRmu_battery.kicad_sch

Title: ADRmu battery module

Size: A4	Date: 2022-07-11	**Rev: 0.6**
KiCad E.D.A. kicad (6.0.5)		Id: 1/1