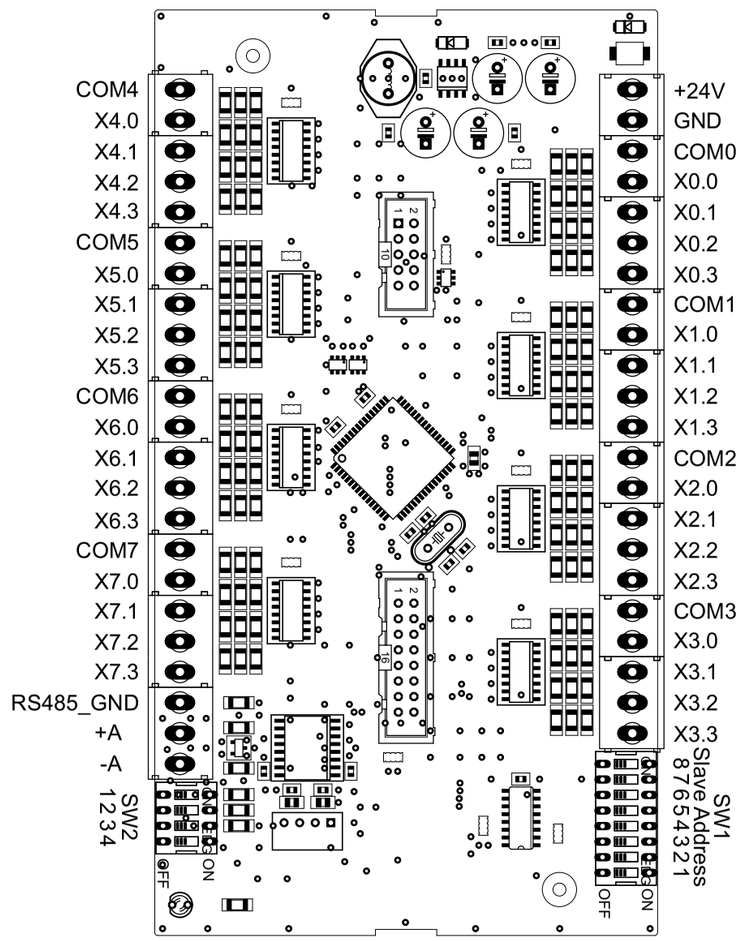

17.8.2019 г. 12:36:40 ч. D:\Developments\Elektronika\MCU\ATMEL\AVR\AVR-LPC\Scheme and Board\v.0.1.0\v.0.1.0.brd