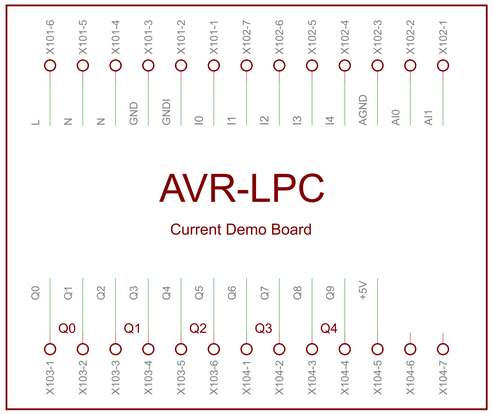

IO Connectors
Simeon S. Ivanov

AVR-LPC	
v.0.0.4	
19.3.2012	
Sheet: 1/8	

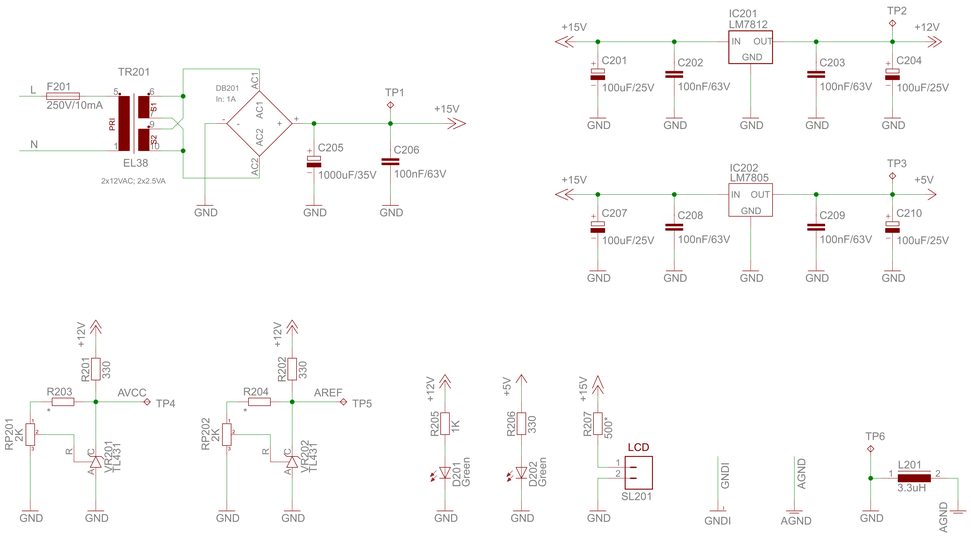

Power Supply
Simeon S. Ivanov

AVR-LPC	
v.0.0.4	
19.3.2012	
Sheet: 2/8	

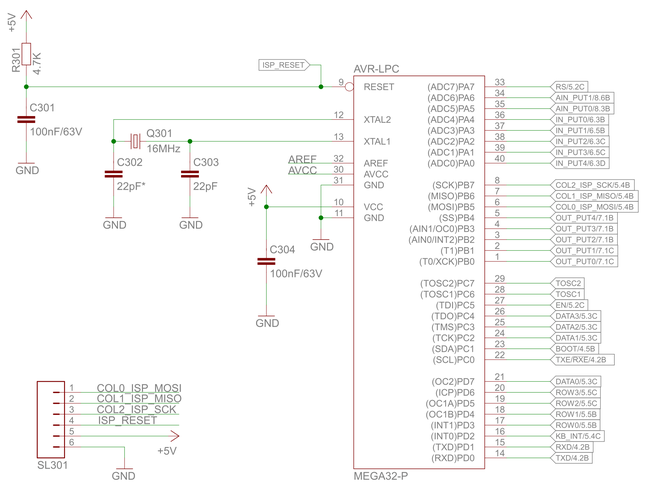

AVR-LPC
Simeon S. Ivanov

AVR-LPC	
v.0.0.4	
19.3.2012	
Sheet: 3/8	

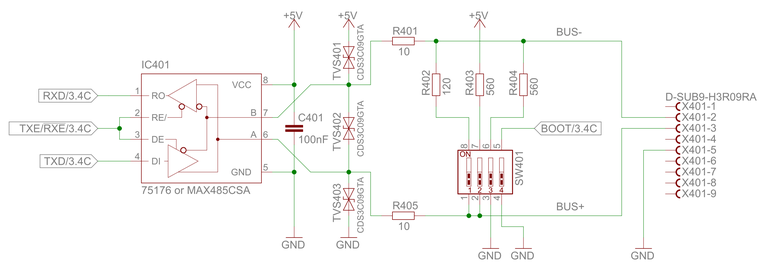

AVR-LPC
Simeon S. Ivanov

AVR-LPC	
v.0.0.4	
19.3.2012	
Sheet: 4/8	

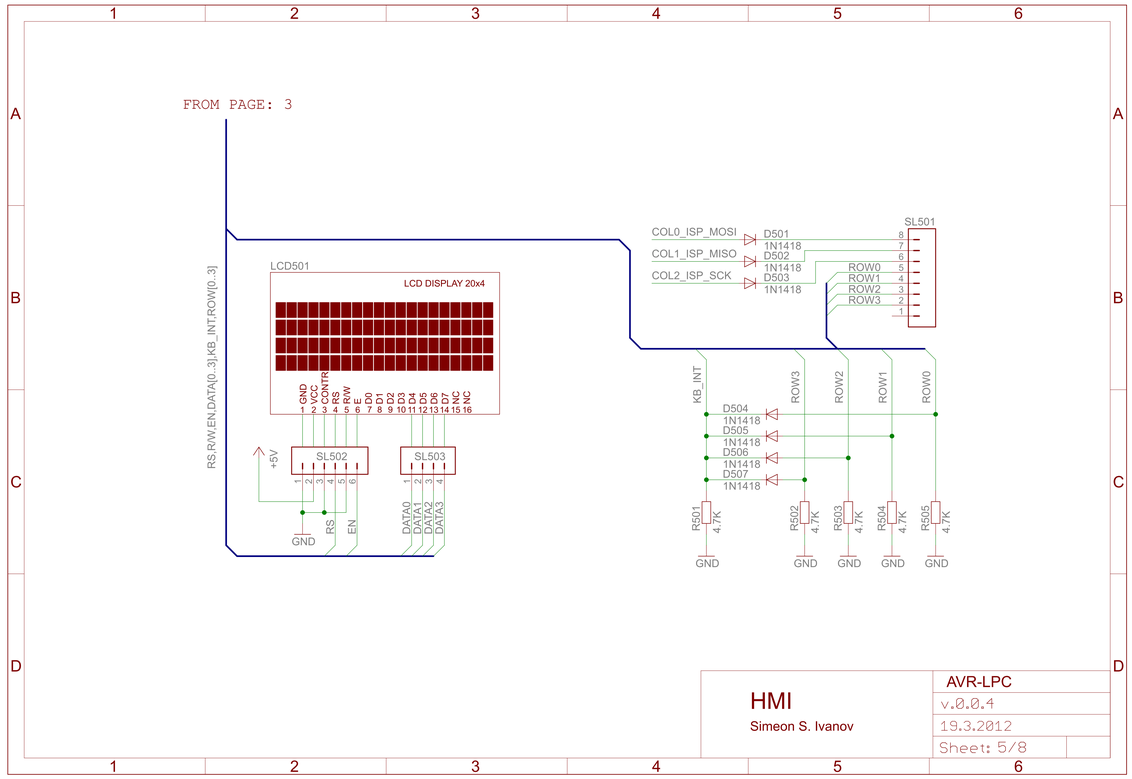

20.6.2012 г. 22:11:06 f=2.00 E:\Developments\Elektronika\MCU\ATMEL\AVR\AVR-LPC\Scheme and Board\v.0.0.4\v.0.0.4.sch (Sheet: 5/8)

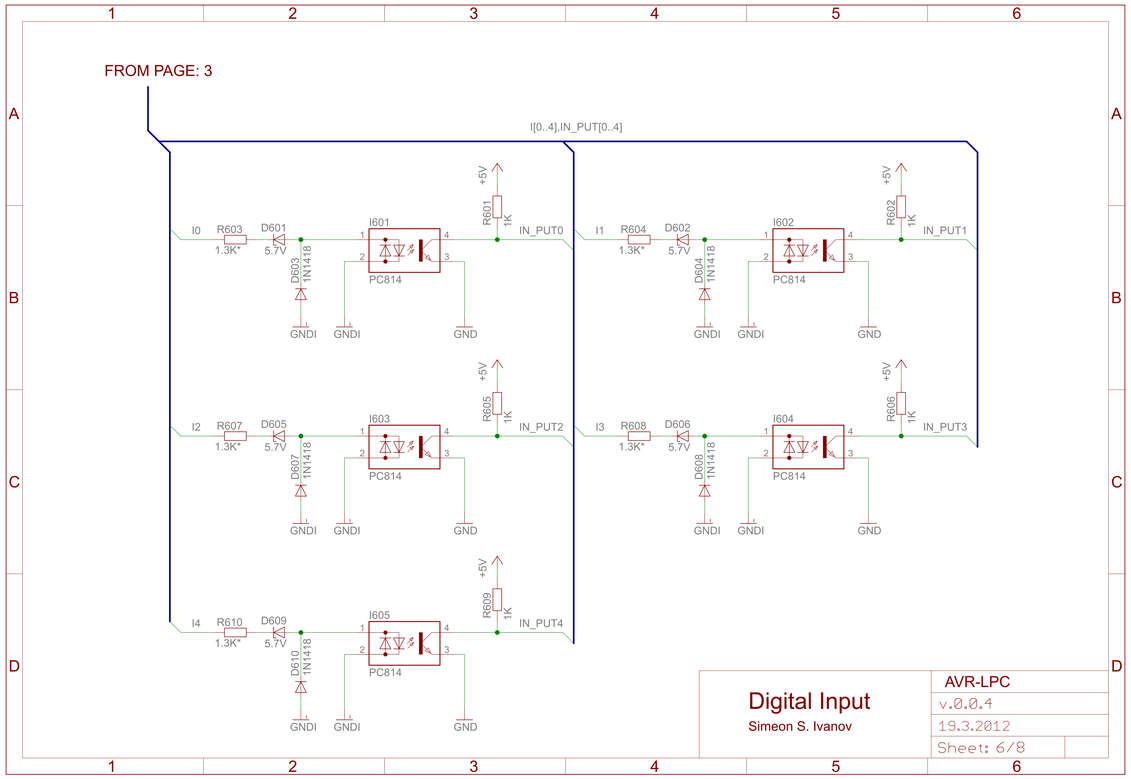

20.6.2012 г. 22:11:07 f=2.00 E:\Developments\Elektronika\MCU\ATMEL\AVR\AVR-LPC\Scheme and Board\v.0.0.4\v.0.0.4.sch (Sheet: 6/8)

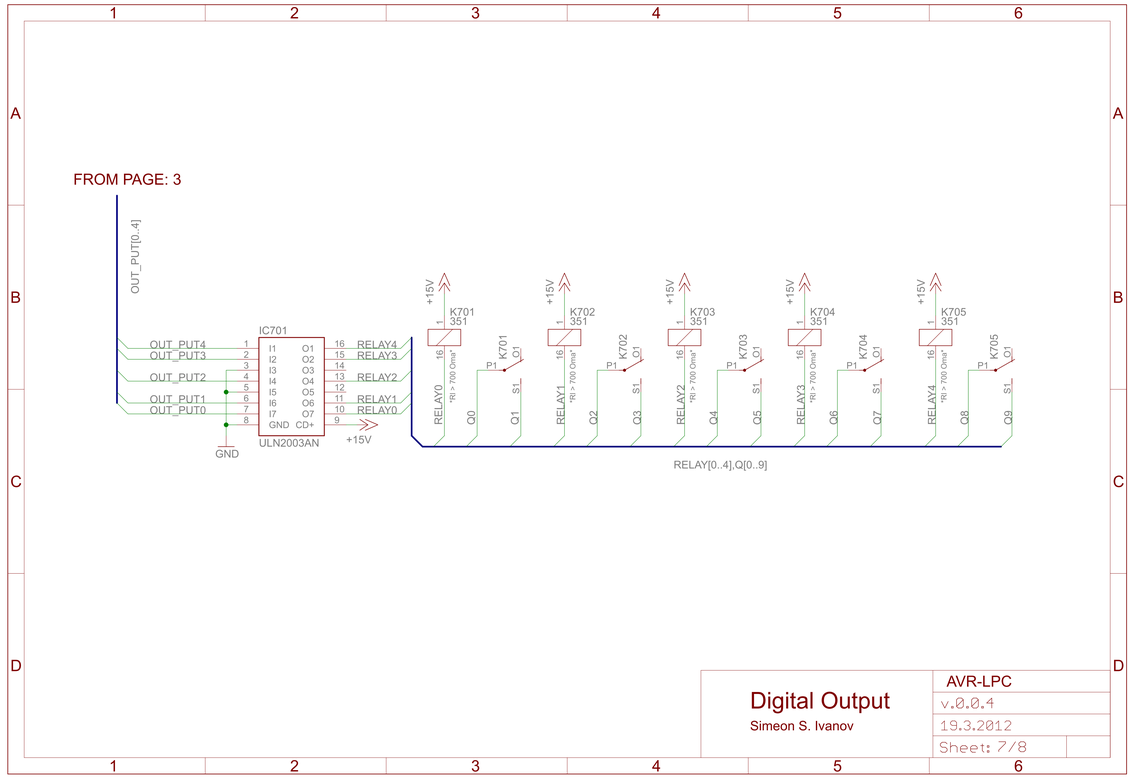

20.6.2012 г. 22:11:07 f=2.00 E:\Developments\Elektronika\MCU\ATMEL\AVR\AVR-LPC\Scheme and Board\v.0.0.4\v.0.0.4.sch (Sheet: 7/8)

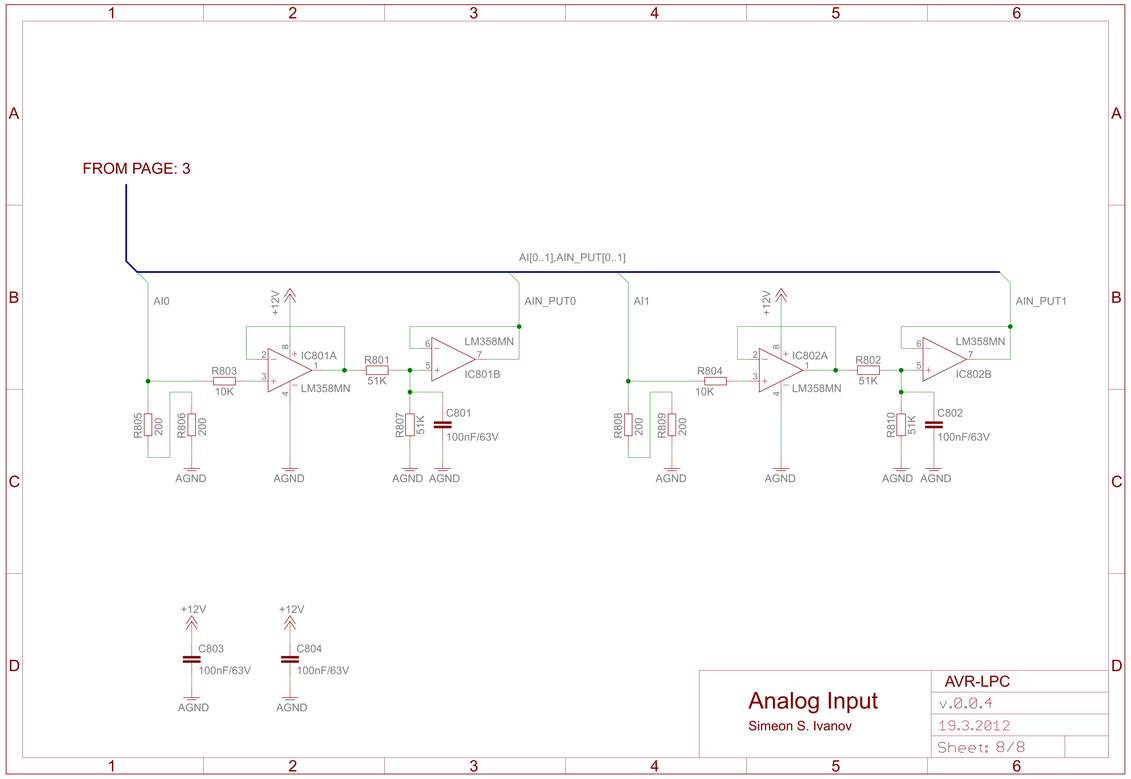

20.6.2012 г. 22:11:07 f=2.00 E:\Developments\Elektronika\MCU\ATMEL\AVR\AVR-LPC\Scheme and Board\v.0.0.4\v.0.0.4.sch (Sheet: 8/8)