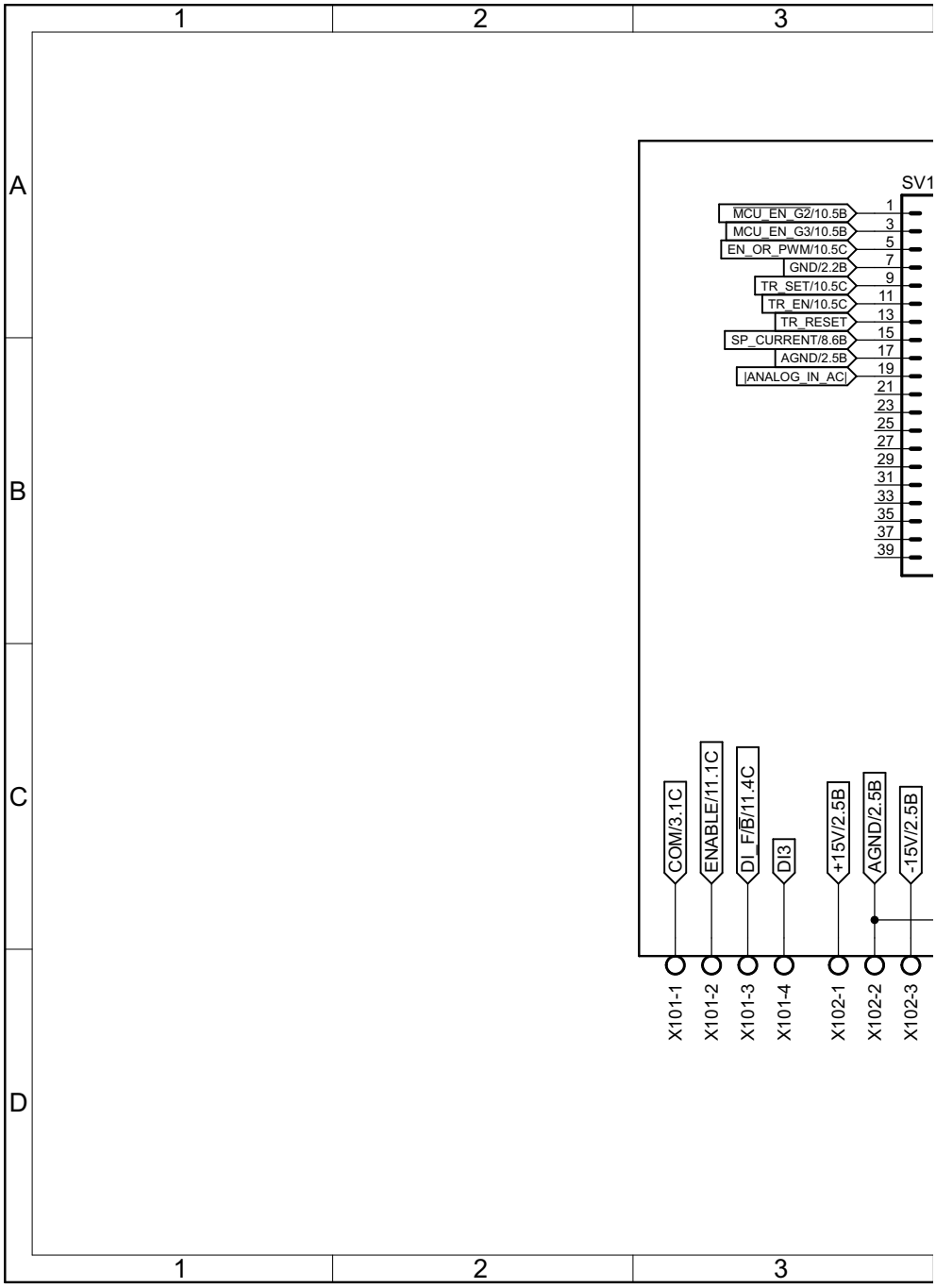
1
2
3
A
B
C
D
SV1
MCU_EN_G2/10.5B
MCU_EN_G3/10.5B
EN_OR_PWM/10.5C
GND/2.2B
TR_SET/10.5C
TR_EN/10.5C
TR_RESET
SP_CURRENT/8.6B
AGND/2.5B
|ANALOG_IN_AC|
COM/3.1C
ENABLE/11.1C
DI_F/B/11.4C
DI3
+15V/2.5B
AGND/2.5B
-15V/2.5B
X101-1
X101-2
X101-3
X101-4
X102-1
X102-2
X102-3

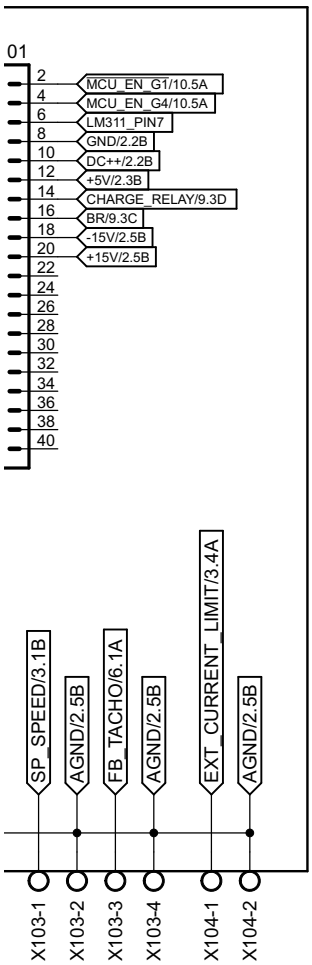

IO Connectors

simeon_s._ivanov@abv.bg

Simeon S. Ivanov

Speed Reg

14.10.2017

Sheet: 1/11

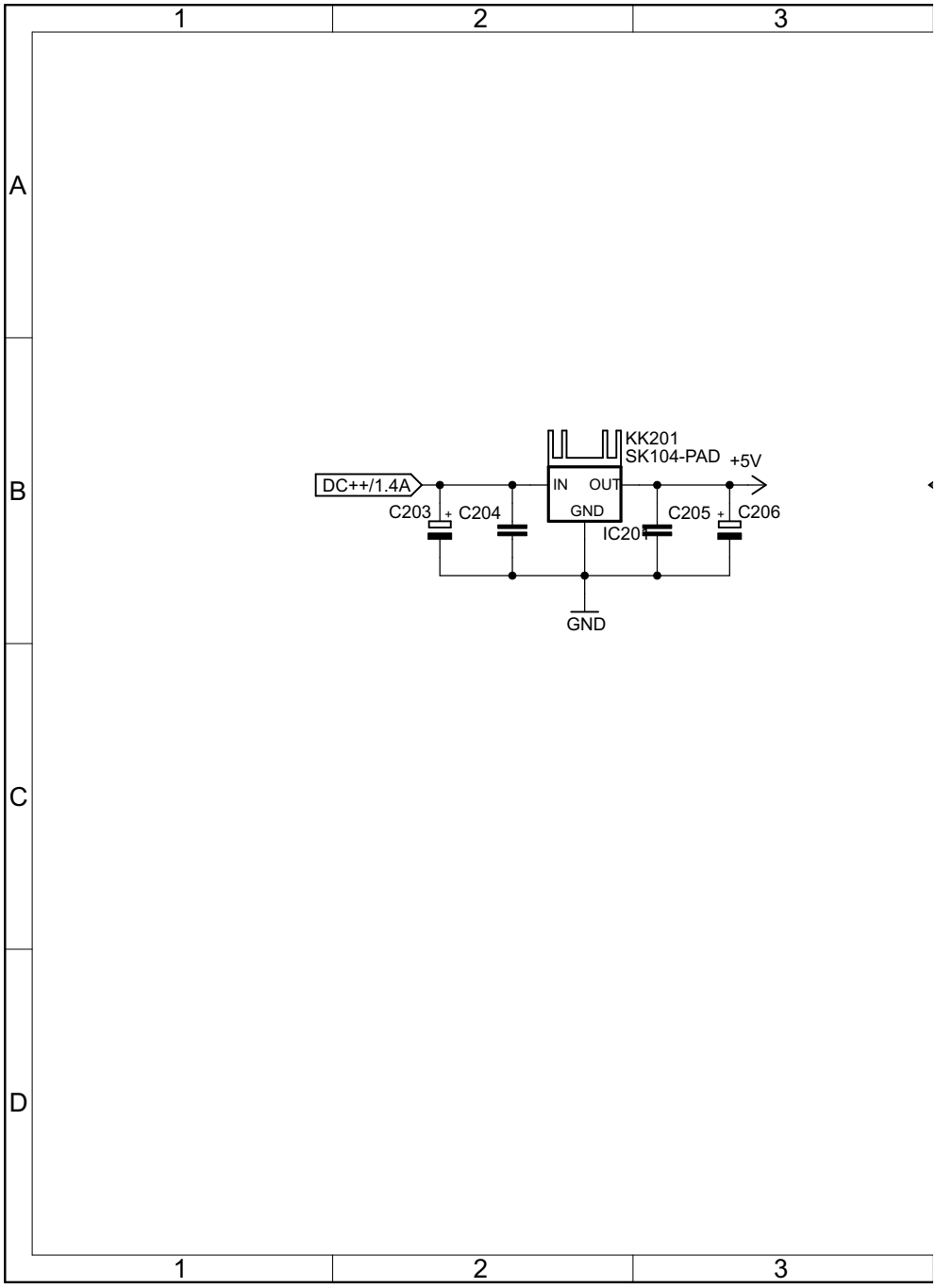
1
2
3
A
B
C
D
KK201
SK104-PAD
+5V
DC++/1.4A
IN
OUT
GND
C203
C204
C205
C206
IC201
GND

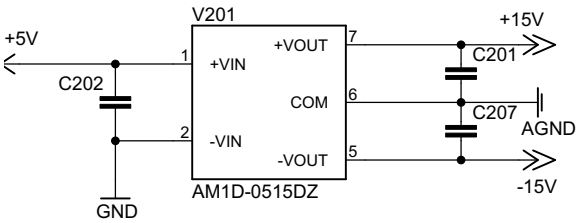

Power Supply	Simeon S. Ivanov	
	Speed Reg	
simeon_s._ivanov@abv.bg	14.10.2017	
	Sheet: 2/11	

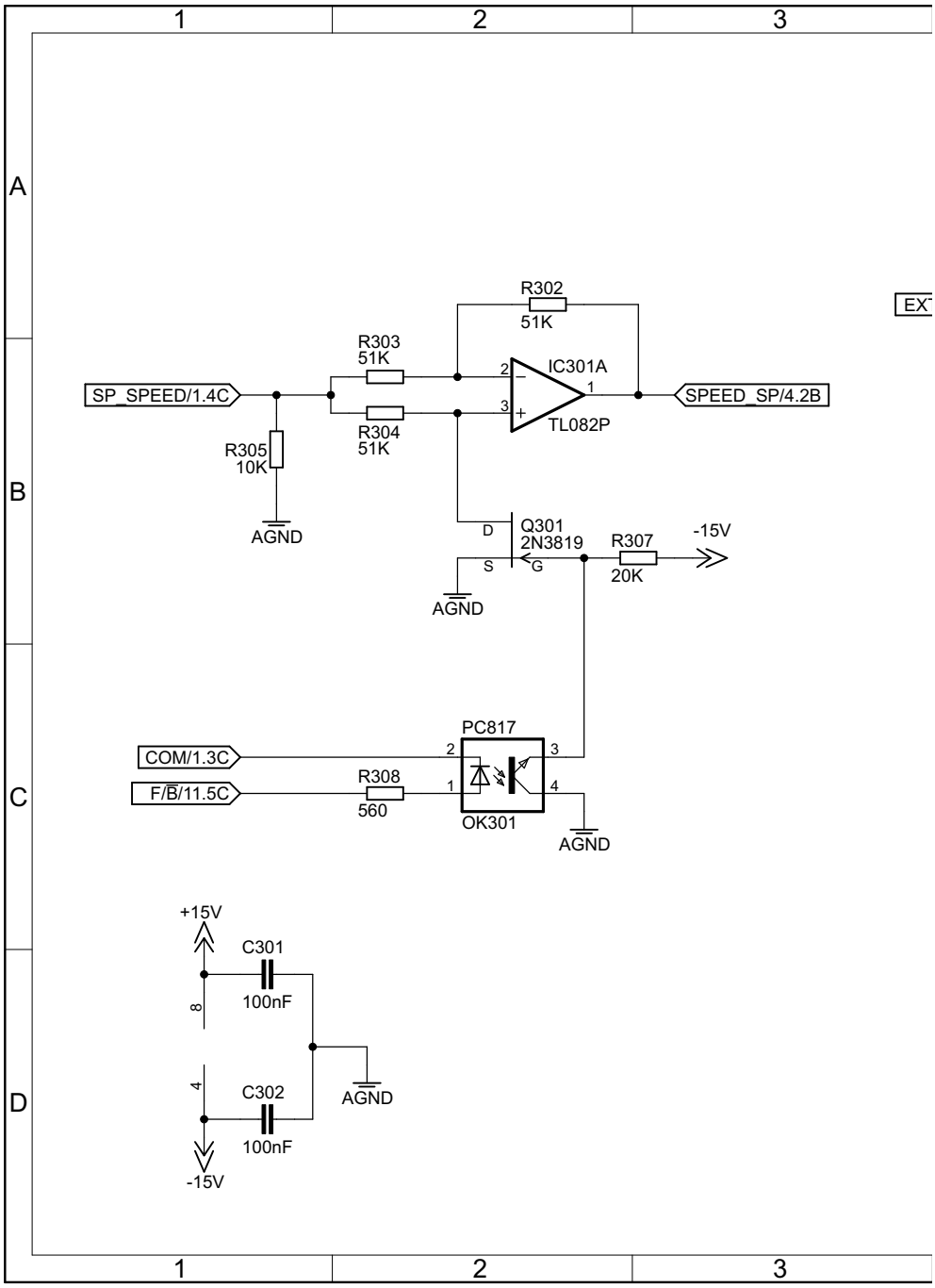
1
2
3
A
B
C
D
R302
51K
R303
51K
R304
51K
R305
10K
IC301A
TL082P
SP_SPEED/1.4C
SPEED_SP/4.2B
AGND
Q301
2N3819
D
S
G
R307
20K
-15V
PC817
COM/1.3C
F/B/11.5C
R308
560
OK301
+15V
C301
100nF
C302
100nF
-15V

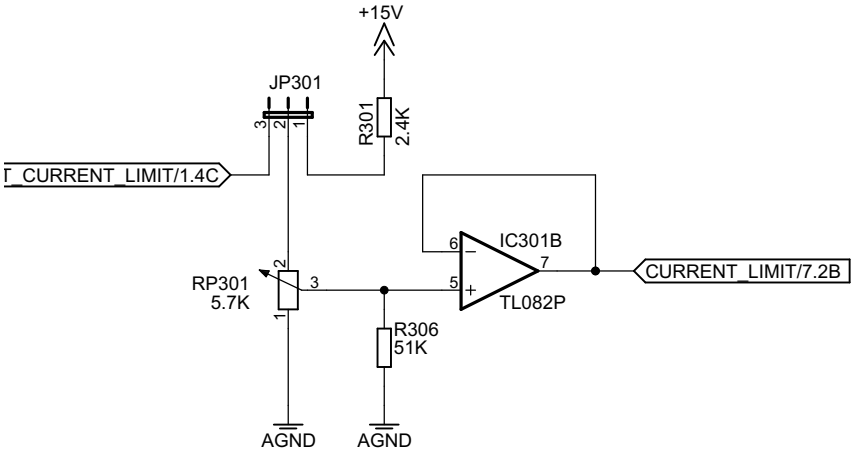

Speed SP, F/$\overline{B}$ and Current Limit SP

simeon_s._ivanov@abv.bg

Simeon S. Ivanov

Speed Reg

14.10.2017

Sheet: 3/11

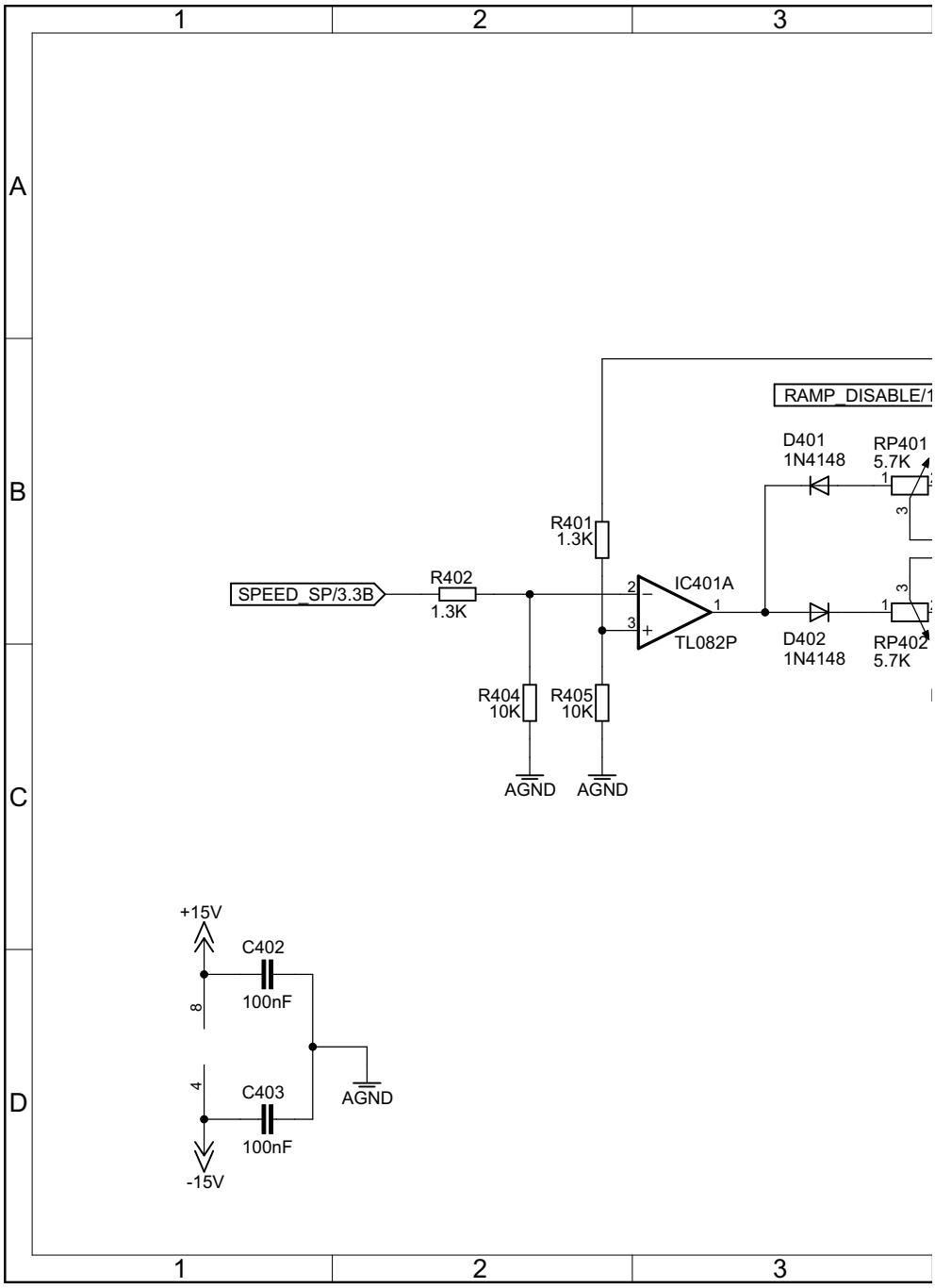
1
2
3
A
B
C
D
RAMP_DISABLE/1
D401
1N4148
RP401
5.7K
R401
1.3K
SPEED_SP/3.3B
R402
1.3K
IC401A
TL082P
D402
1N4148
RP402
5.7K
R404
10K
R405
10K
AGND
AGND
+15V
C402
100nF
C403
100nF
AGND
-15V

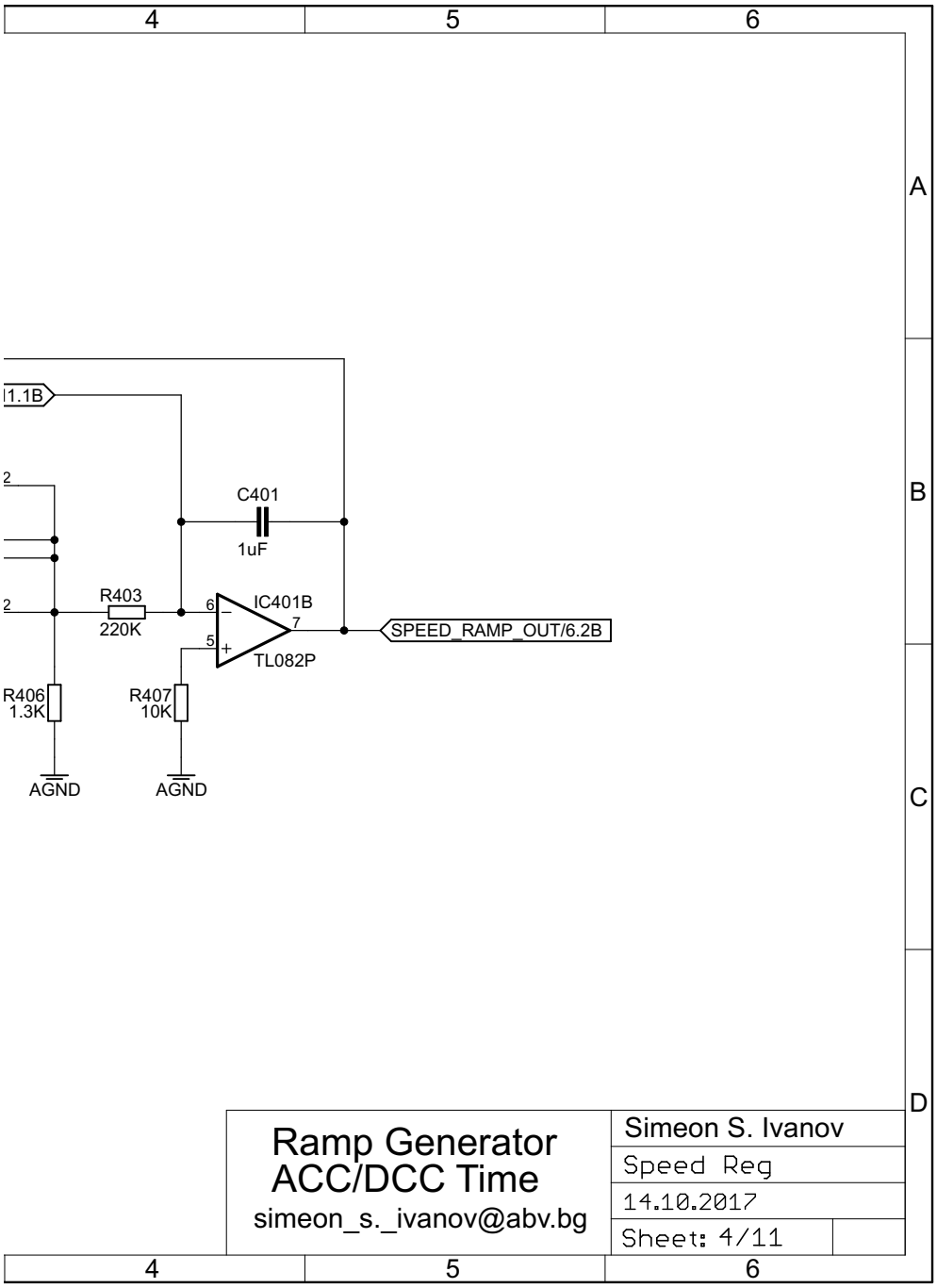
1.1B
2
2
C401
1uF
R403
220K
6
5
IC401B
7
TL082P
SPEED_RAMP_OUT/6.2B
R406
1.3K
R407
10K
AGND
AGND
Ramp Generator
ACC/DCC Time
simeon_s._ivanov@abv.bg
Simeon S. Ivanov
Speed Reg
14.10.2017
Sheet: 4/11

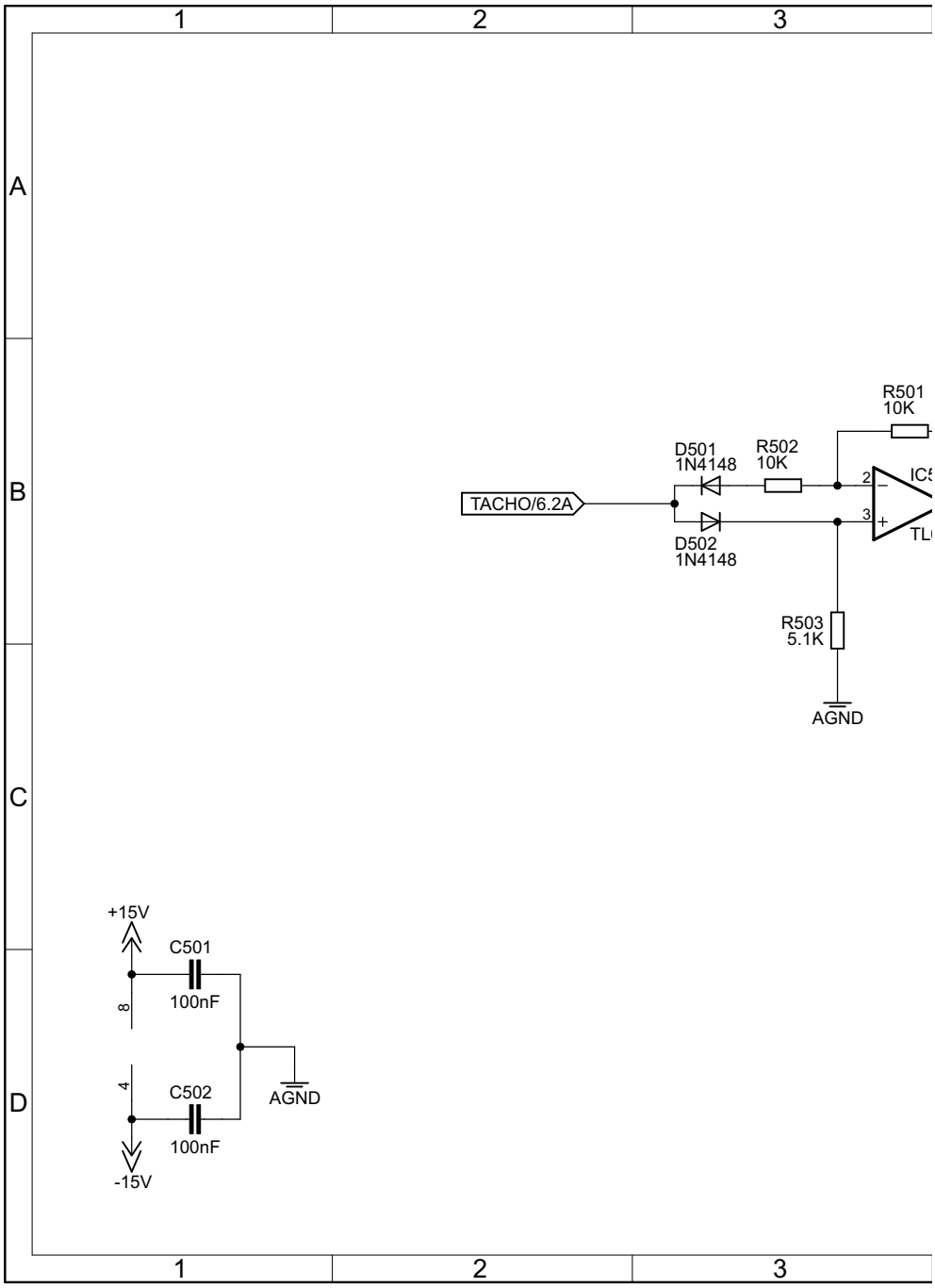
1
2
3
A
B
C
D
R501
10K
D501
1N4148
R502
10K
TACHO/6.2A
D502
1N4148
R503
5.1K
AGND
+15V
C501
100nF
C502
100nF
-15V
AGND

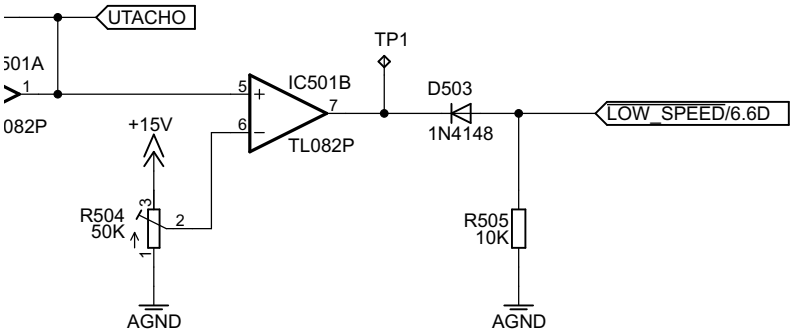

???
???
simeon_s._ivanov@abv.bg

Simeon S. Ivanov

Speed Reg

14.10.2017

Sheet: 5/11

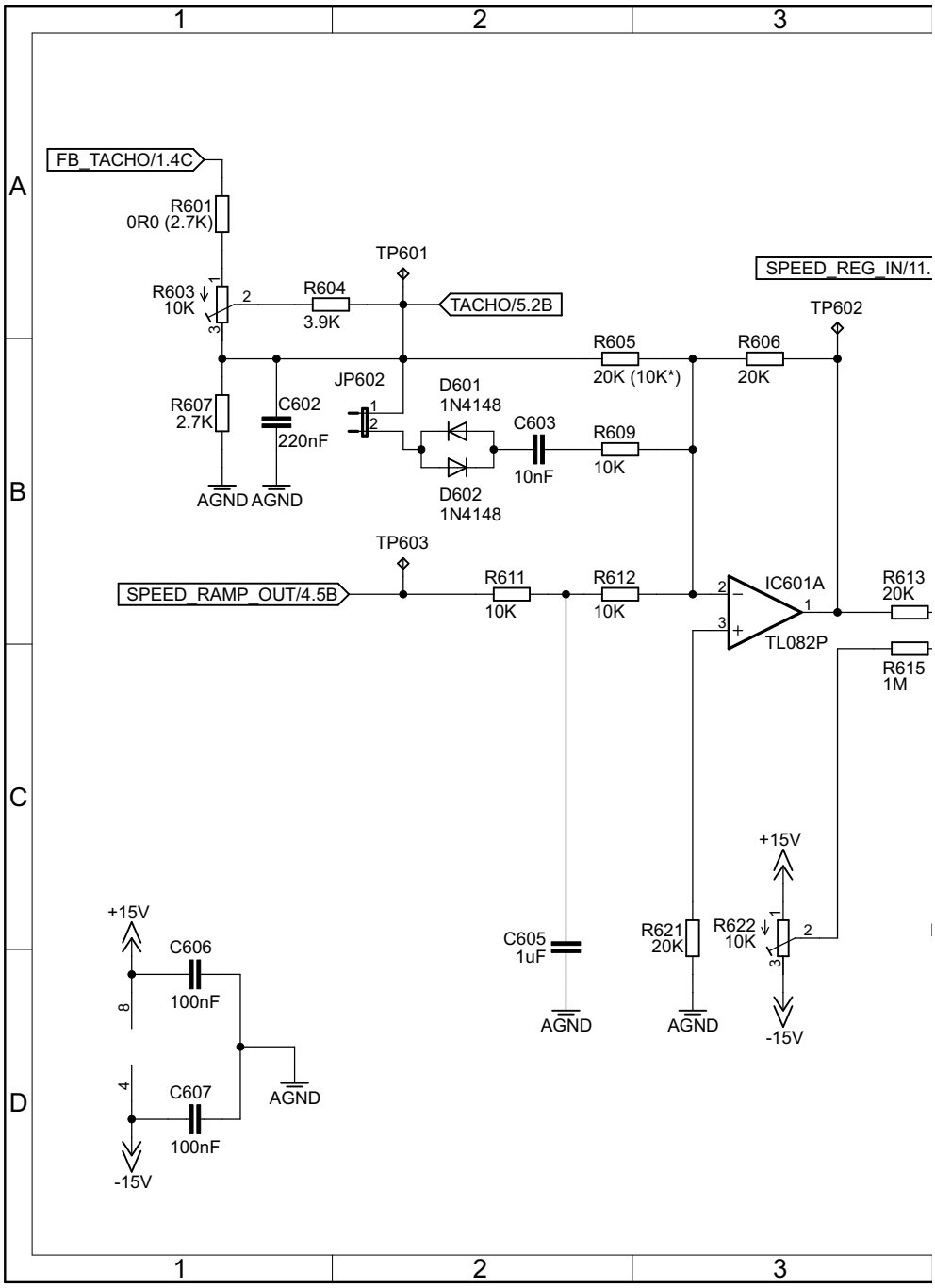
FB_TACHO/1.4C
R601
0R0 (2.7K)
R603
10K
R604
3.9K
TP601
TACHO/5.2B
SPEED_REG_IN/11.
TP602
R605
20K (10K*)
R606
20K
JP602
D601
1N4148
C603
10nF
R609
10K
R607
2.7K
C602
220nF
AGND
AGND
D602
1N4148
TP603
SPEED_RAMP_OUT/4.5B
R611
10K
R612
10K
IC601A
TL082P
R613
20K
R615
1M
+15V
C606
100nF
C607
100nF
AGND
-15V
C605
1uF
AGND
R621
20K
AGND
R622
10K
+15V
-15V

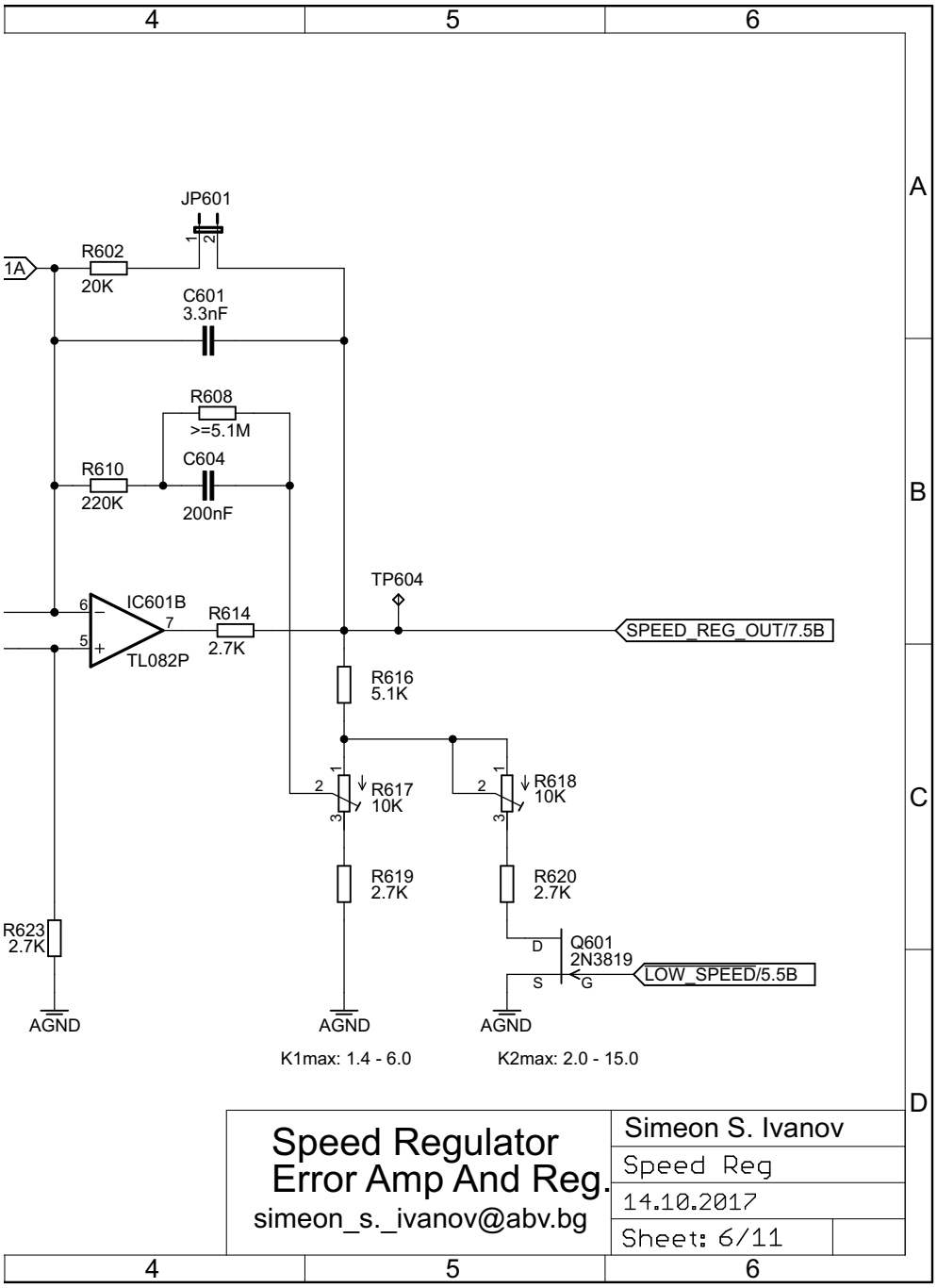
JP601
1A
R602
20K
C601
3.3nF
R608
>=5.1M
R610
220K
C604
200nF
IC601B
TL082P
R614
2.7K
TP604
SPEED_REG_OUT/7.5B
R616
5.1K
R617
10K
R618
10K
R619
2.7K
R620
2.7K
R623
2.7K
Q601
2N3819
LOW_SPEED/5.5B
AGND
AGND
AGND
K1max: 1.4 - 6.0
K2max: 2.0 - 15.0
Speed Regulator
Error Amp And Reg.
simeon_s._ivanov@abv.bg
Simeon S. Ivanov
Speed Reg
14.10.2017
Sheet: 6/11

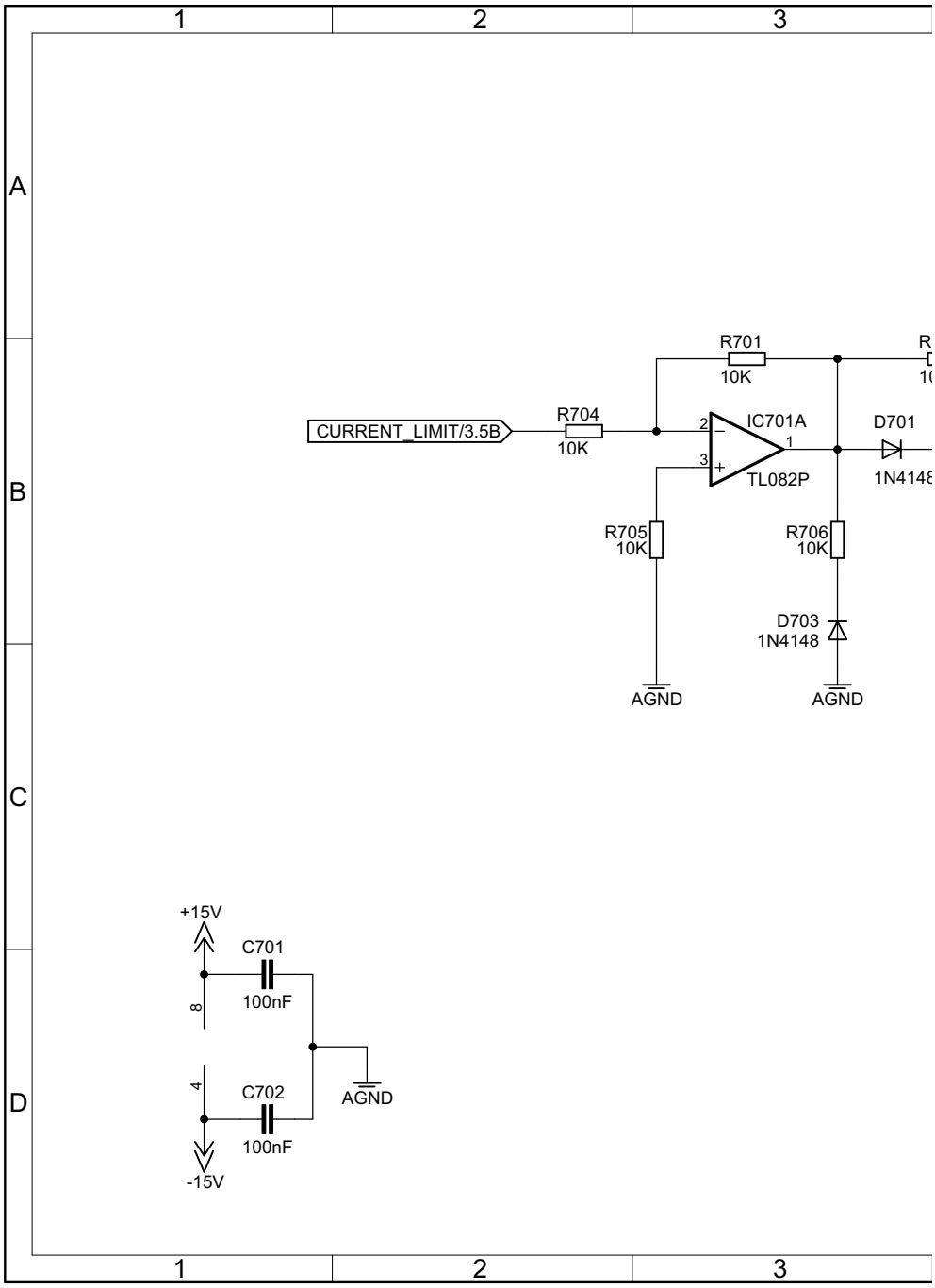
1
2
3
A
B
C
D
R701
10K
R
10
CURRENT_LIMIT/3.5B
R704
10K
2
3
IC701A
1
TL082P
D701
1N4148
R705
10K
R706
10K
D703
1N4148
AGND
AGND
+15V
C701
100nF
8
4
C702
100nF
AGND
-15V

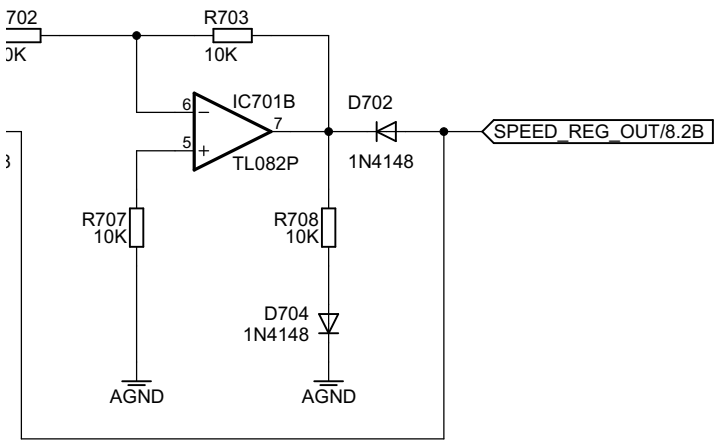

Current Limit

simeon_s._ivanov@abv.bg

Simeon S. Ivanov

Speed Reg

14.10.2017

Sheet: 7/11

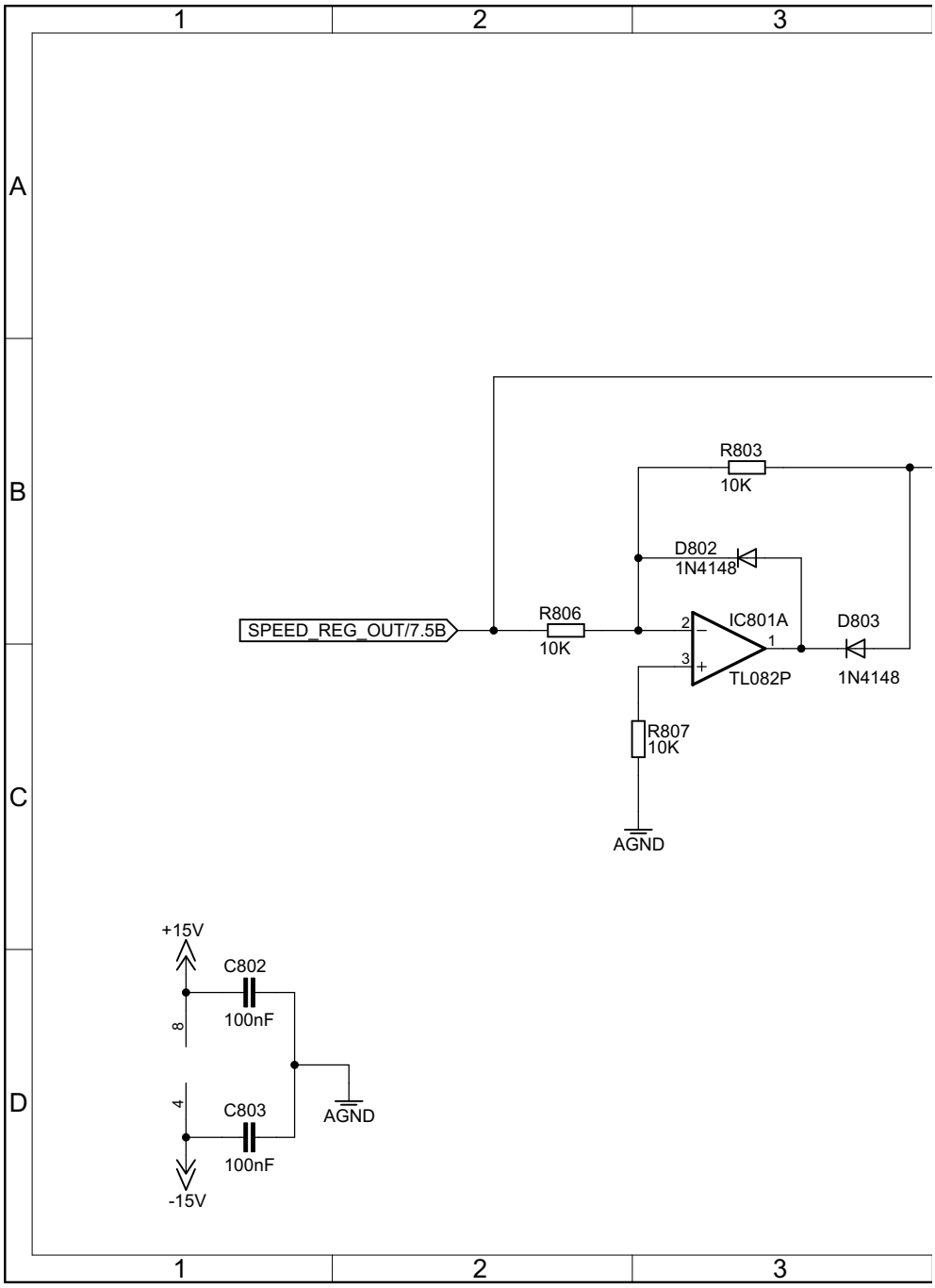
1
2
3
A
B
C
D
R803
10K
D802
1N4148
SPEED_REG_OUT/7.5B
R806
10K
IC801A
TL082P
D803
1N4148
R807
10K
AGND
+15V
C802
100nF
8
4
C803
100nF
AGND
-15V

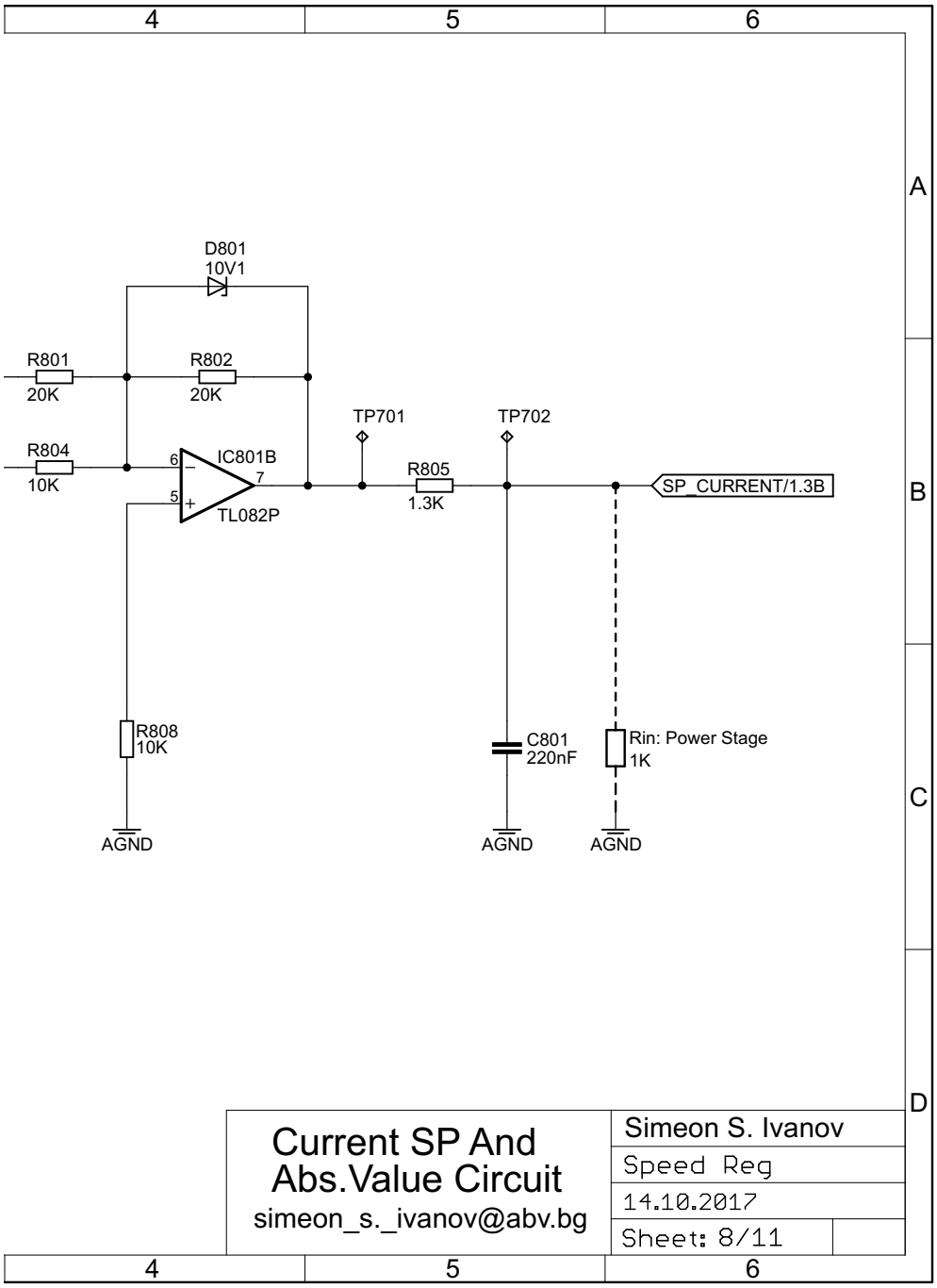

Current SP And Abs.Value Circuit

simeon_s._ivanov@abv.bg

Simeon S. Ivanov

Speed Reg

14.10.2017

Sheet: 8/11

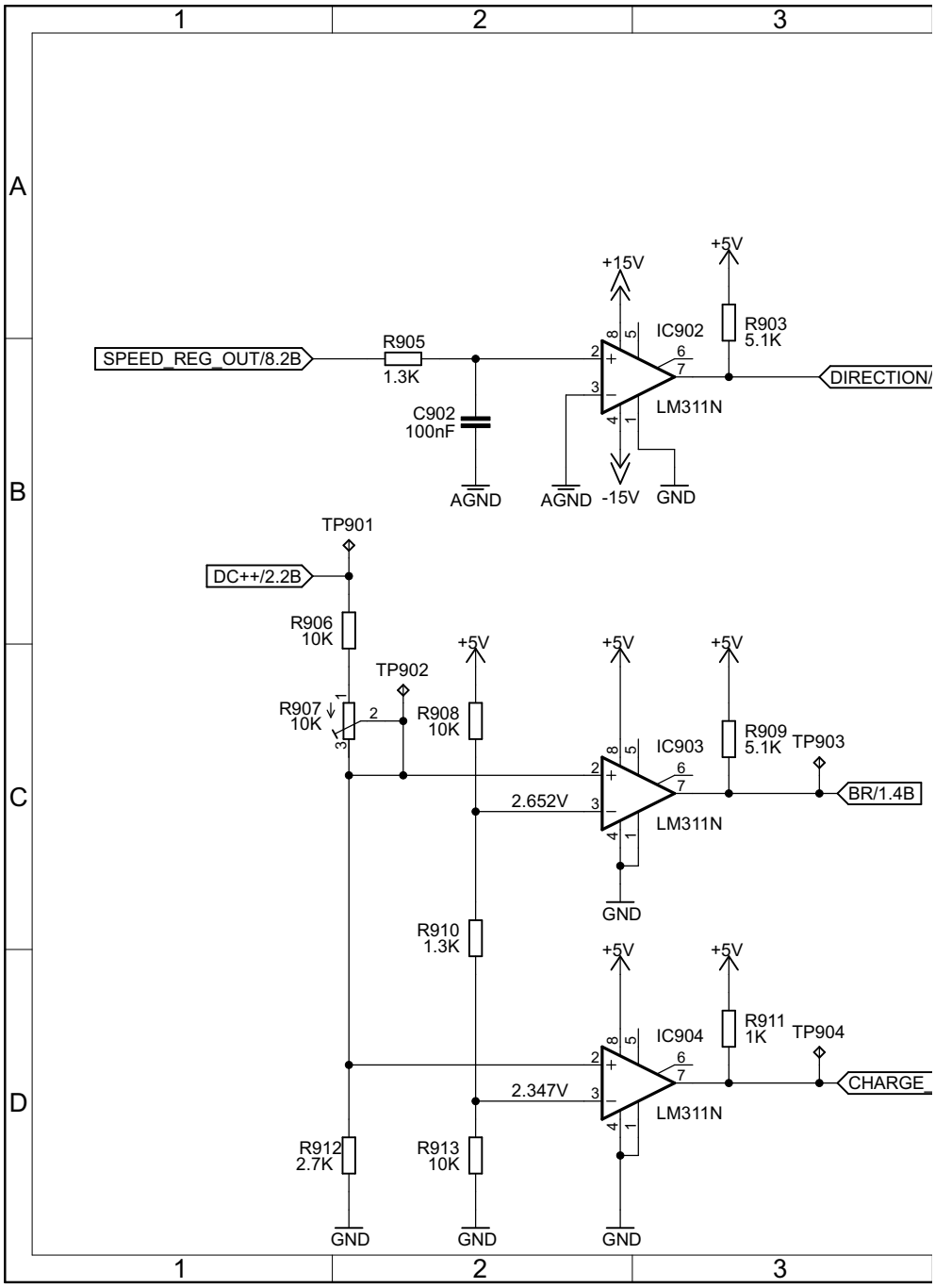
SPEED_REG_OUT/8.2B
R905
1.3K
C902
100nF
AGND
AGND
+15V
-15V
GND
IC902
LM311N
+5V
R903
5.1K
DIRECTION/
TP901
DC++/2.2B
R906
10K
R907
10K
TP902
R908
10K
+5V
+5V
+5V
IC903
LM311N
R909
5.1K
TP903
BR/1.4B
2.652V
GND
R910
1.3K
+5V
+5V
IC904
LM311N
R911
1K
TP904
CHARGE_
2.347V
R912
2.7K
R913
10K
GND
GND
GND

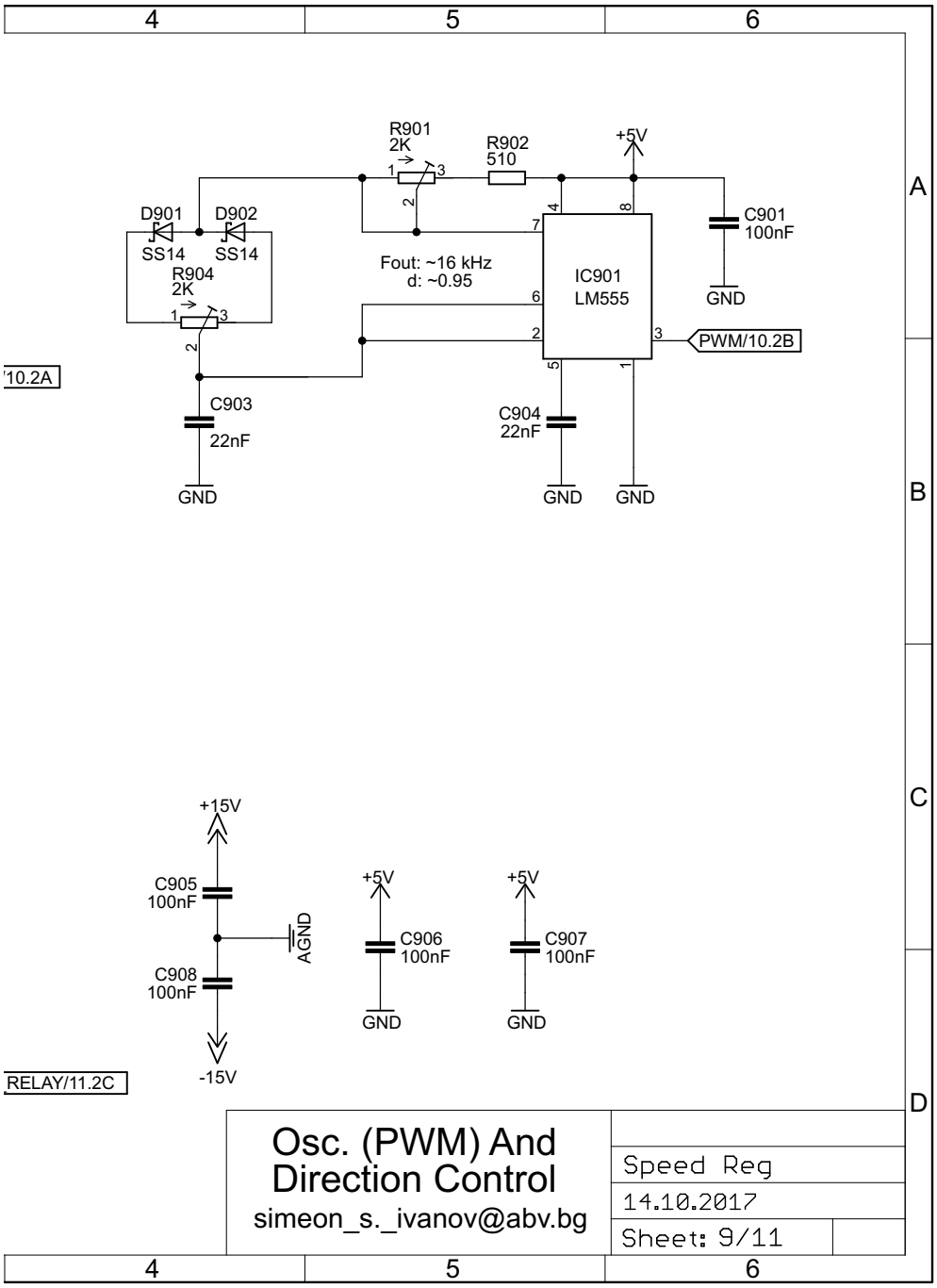
R901
2K
R902
510
+5V
D901
D902
SS14
SS14
R904
2K
Fout: ~16 kHz
d: ~0.95
IC901
LM555
C901
100nF
GND
PWM/10.2B
10.2A
C903
22nF
C904
22nF
GND
GND
GND
+15V
C905
100nF
AGND
C908
100nF
-15V
+5V
C906
100nF
GND
+5V
C907
100nF
GND
RELAY/11.2C
Osc. (PWM) And
Direction Control
simeon_s._ivanov@abv.bg
Speed Reg
14.10.2017
Sheet: 9/11

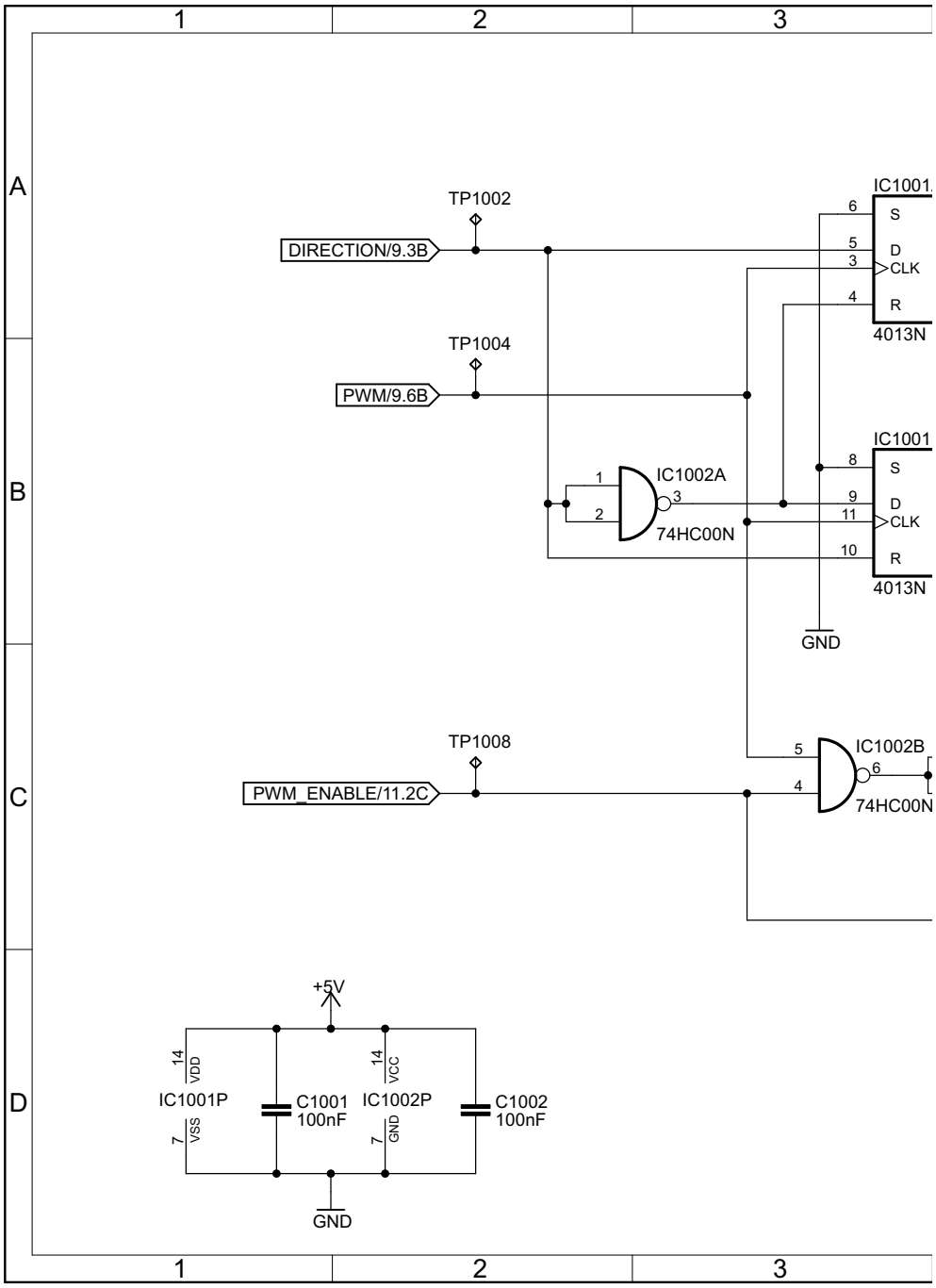
1
2
3
A
B
C
D
TP1002
DIRECTION/9.3B
TP1004
PWM/9.6B
TP1008
PWM_ENABLE/11.2C
IC1001
S
D
CLK
R
4013N
IC1002A
74HC00N
IC1002B
GND
+5V
IC1001P
VDD
VSS
C1001
100nF
IC1002P
VCC
GND
C1002
100nF

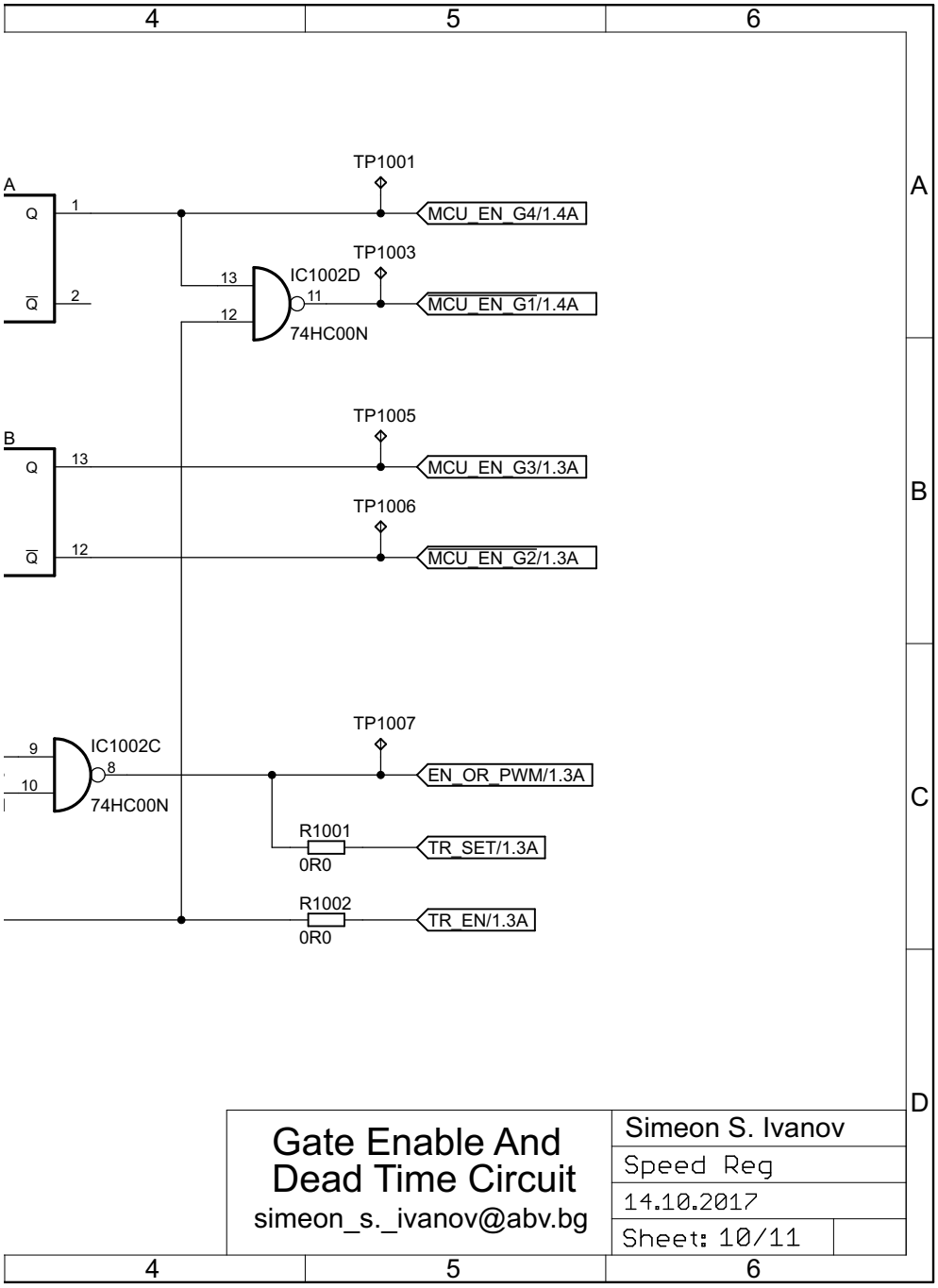
4
5
6
A
B
C
D
TP1001
MCU_EN_G4/1.4A
TP1003
IC1002D
MCU_EN_G1/1.4A
74HC00N
TP1005
MCU_EN_G3/1.3A
TP1006
MCU_EN_G2/1.3A
TP1007
IC1002C
EN_OR_PWM/1.3A
74HC00N
R1001
0R0
TR_SET/1.3A
R1002
0R0
TR_EN/1.3A
Gate Enable And
Dead Time Circuit
simeon_s._ivanov@abv.bg
Simeon S. Ivanov
Speed Reg
14.10.2017
Sheet: 10/11

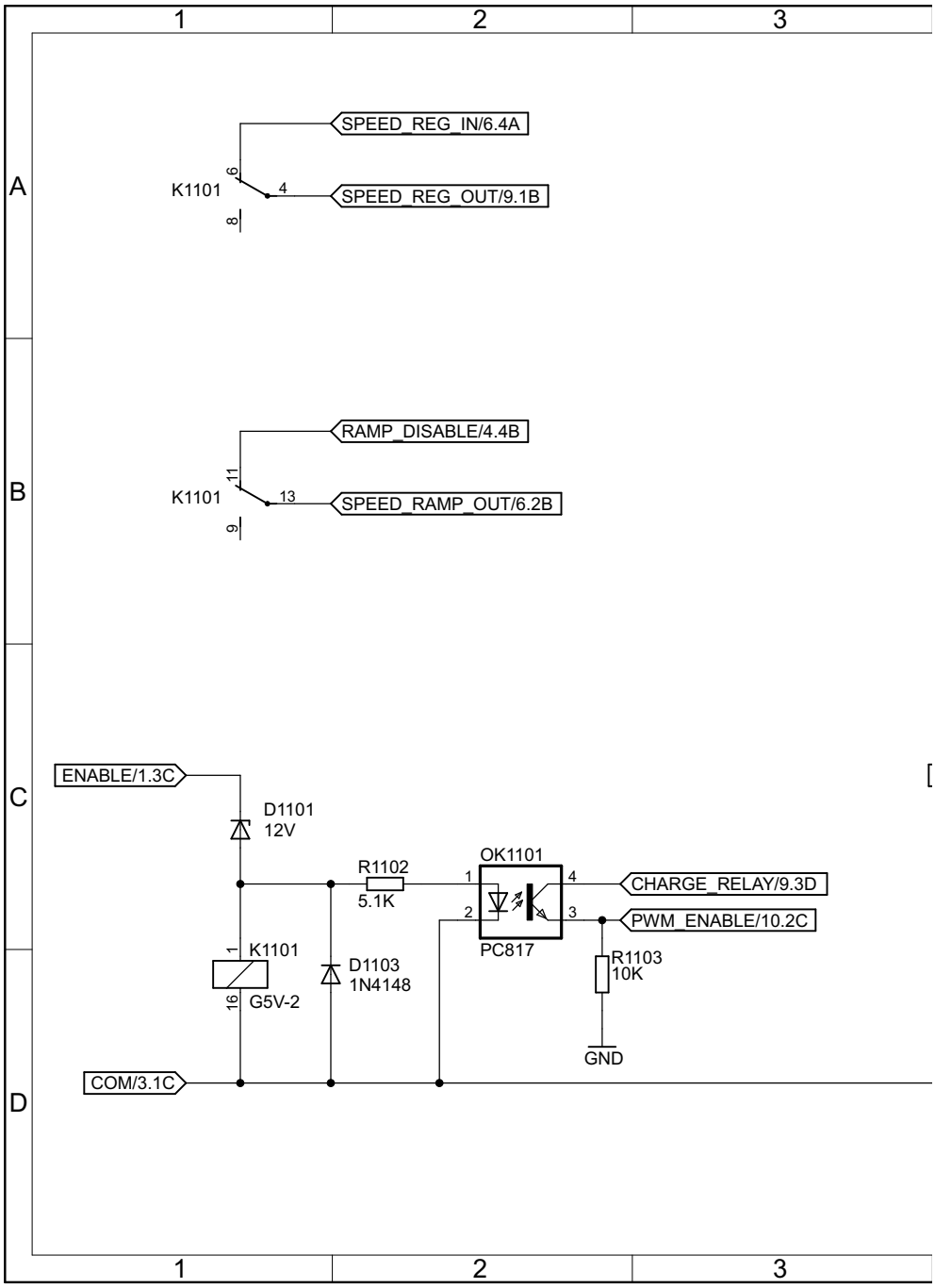
1
2
3
A
B
C
D
SPEED_REG_IN/6.4A
K1101
6
4
8
SPEED_REG_OUT/9.1B
RAMP_DISABLE/4.4B
K1101
11
13
9
SPEED_RAMP_OUT/6.2B
ENABLE/1.3C
D1101
12V
R1102
5.1K
OK1101
1
2
4
3
CHARGE_RELAY/9.3D
PWM_ENABLE/10.2C
PC817
K1101
1
16
G5V-2
D1103
1N4148
R1103
10K
GND
COM/3.1C

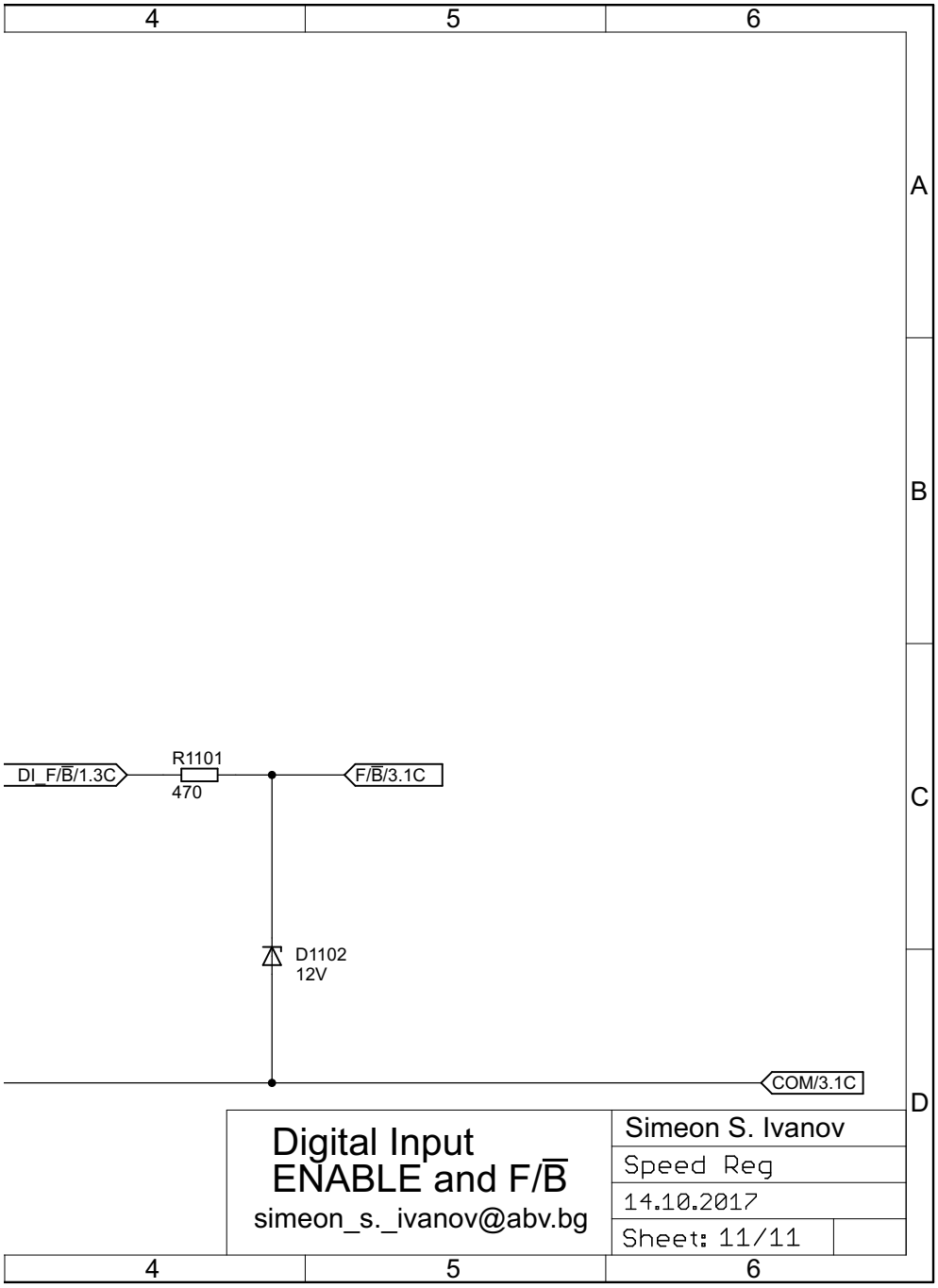
4
5
6
A
B
C
D
DI_F/B/1.3C
R1101
470
F/B/3.1C
D1102
12V
COM/3.1C
Digital Input
ENABLE and F/B
simeon_s._ivanov@abv.bg
Simeon S. Ivanov
Speed Reg
14.10.2017
Sheet: 11/11