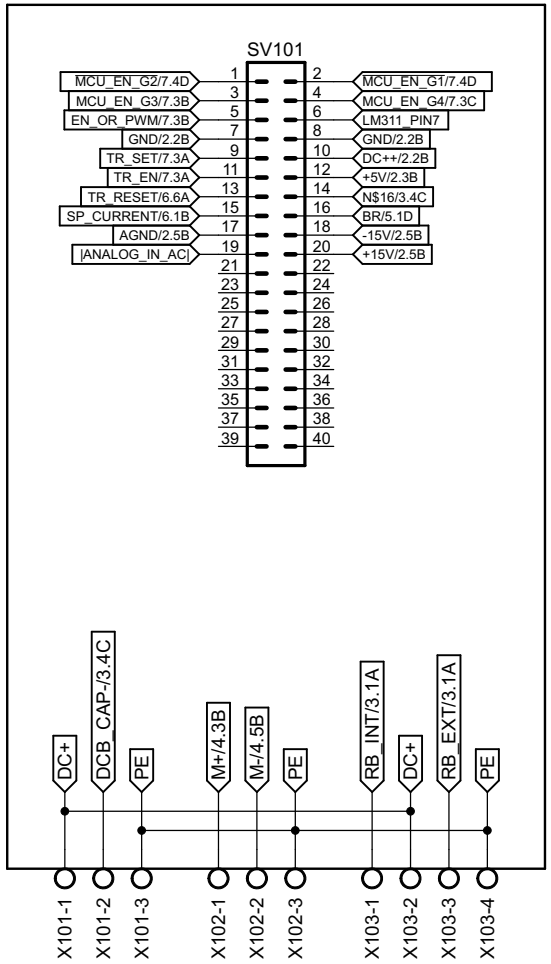

IO Connectors	Simeon S. Ivanov
	Power Stage
	21.11.2017
	Sheet: 1/7

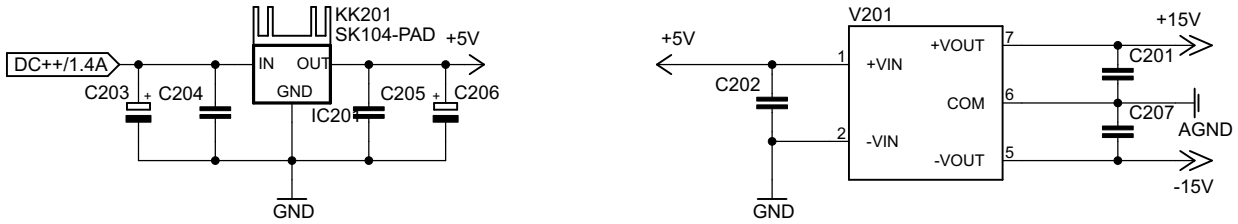

Simeon S. Ivanov	
Power Stage	
21.11.2017	
Sheet: 2/7	

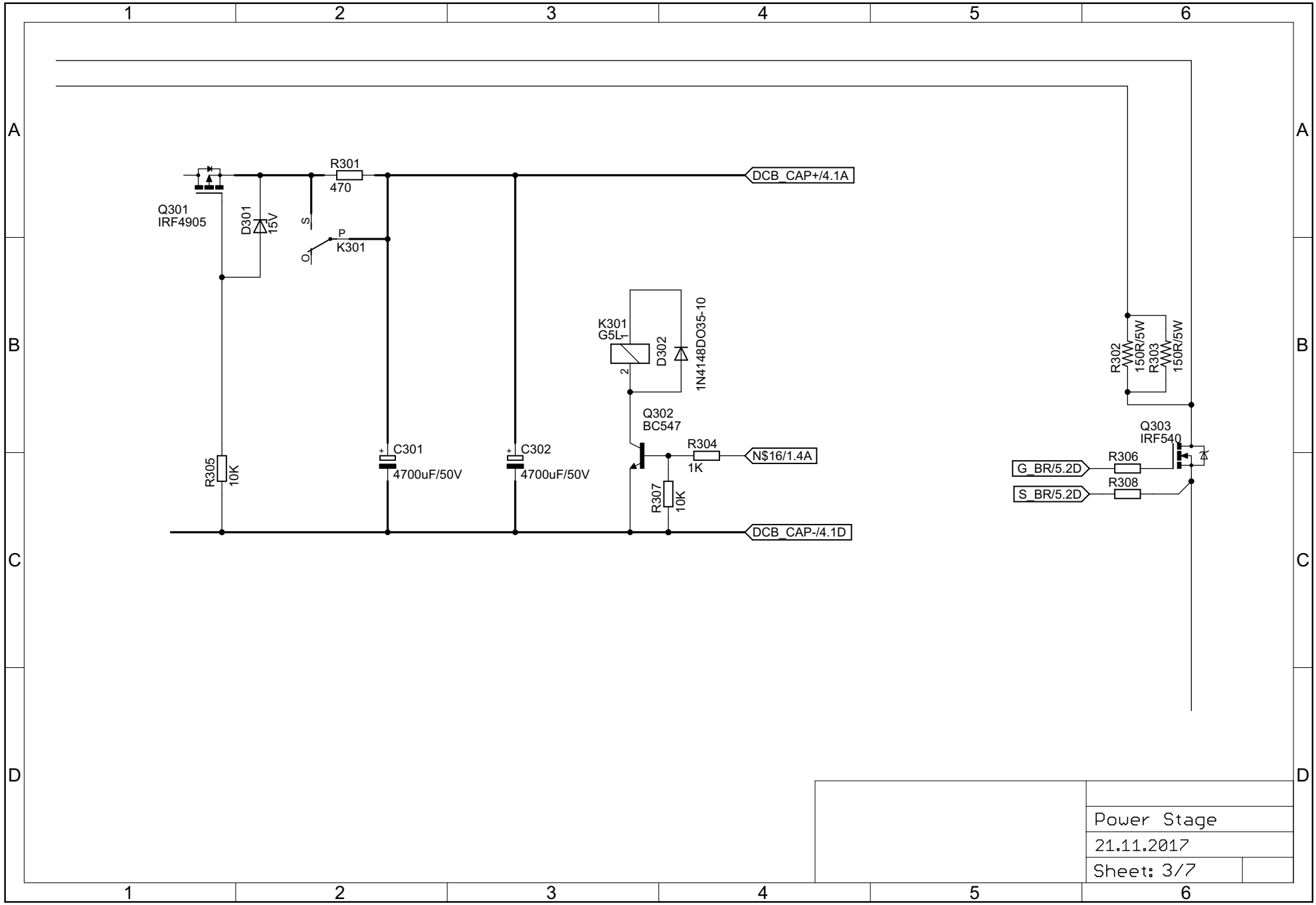
Q301
IRF4905
D301
15V
R301
470
S
P
O
K301
DCB_CAP+/4.1A
K301
G5L
1
2
D302
1N4148DO35-10
Q302
BC547
R304
1K
N$16/1.4A
R307
10K
R305
10K
C301
4700uF/50V
C302
4700uF/50V
DCB_CAP-/4.1D
R302
150R/5W
R303
150R/5W
Q303
IRF540
R306
R308
G_BR/5.2D
S_BR/5.2D
Power Stage
21.11.2017
Sheet: 3/7

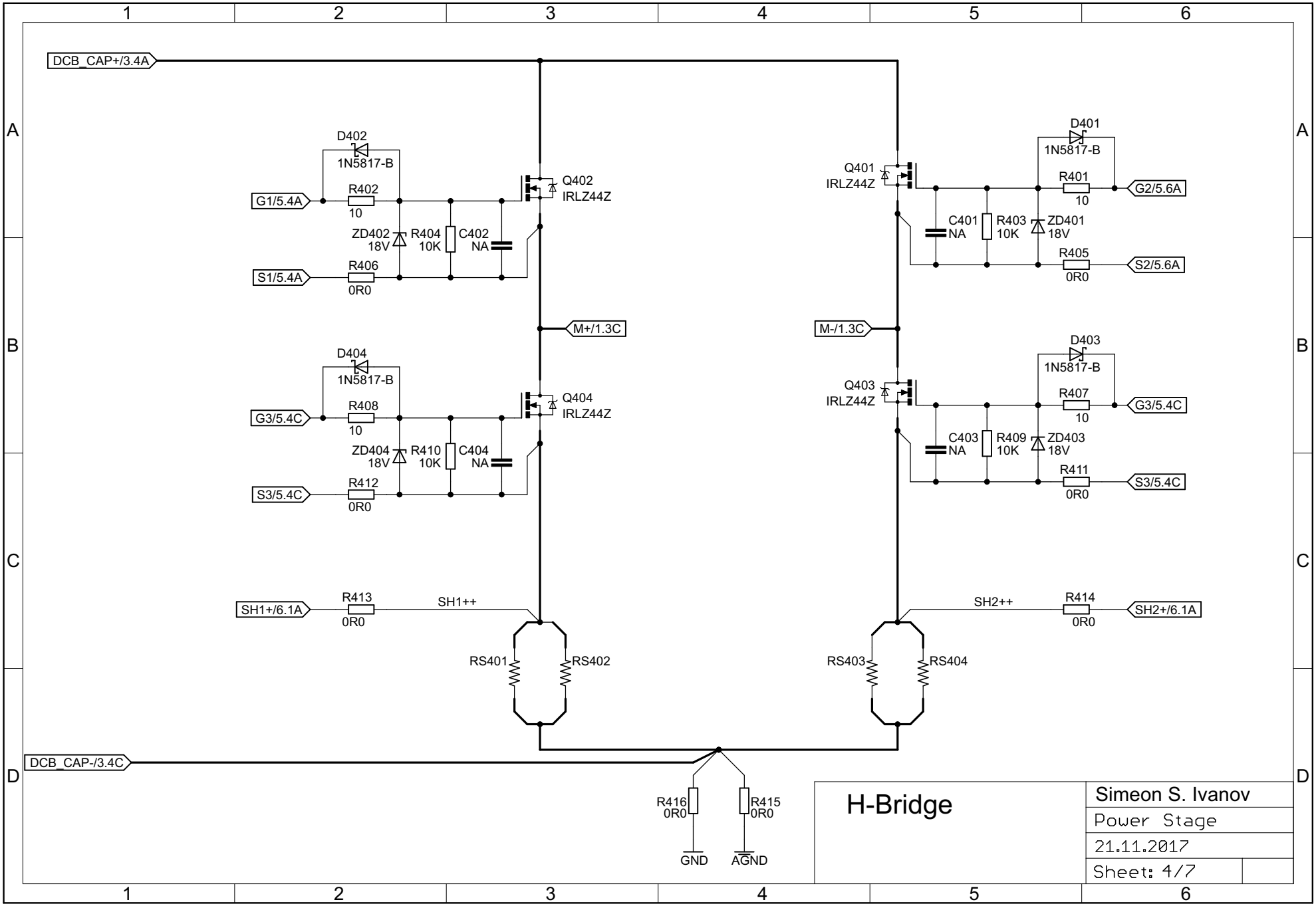

21.11.2017 г. 20:30:48 ч. D:\Developments\Elektronika\Motor Control\Projects\DC Servo\Scheme and Board\v.0.0.1\Power Stage\Power Stage.sch (Sheet: 4/7)

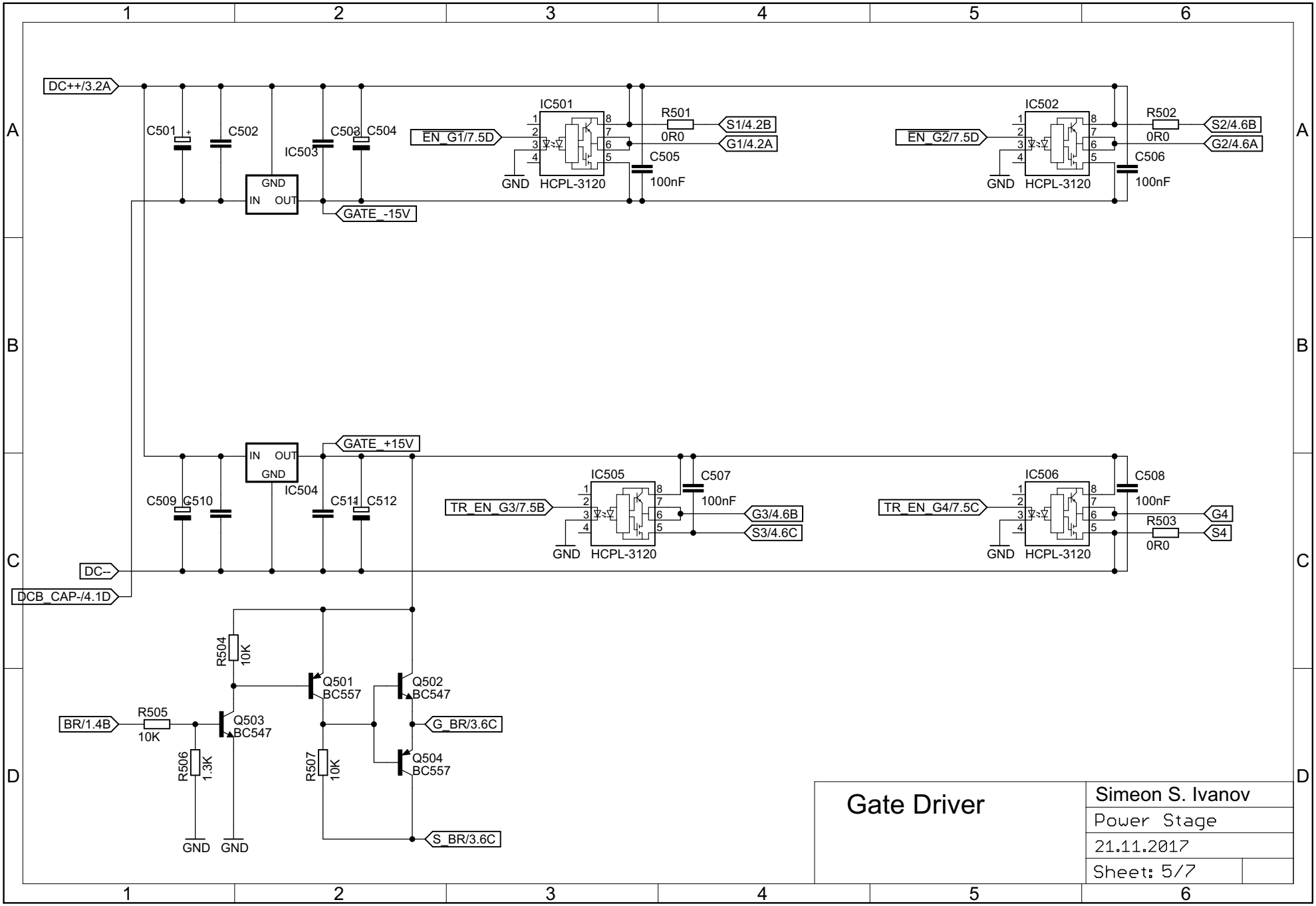

Gate Driver

Simeon S. Ivanov

Power Stage

21.11.2017

Sheet: 5/7

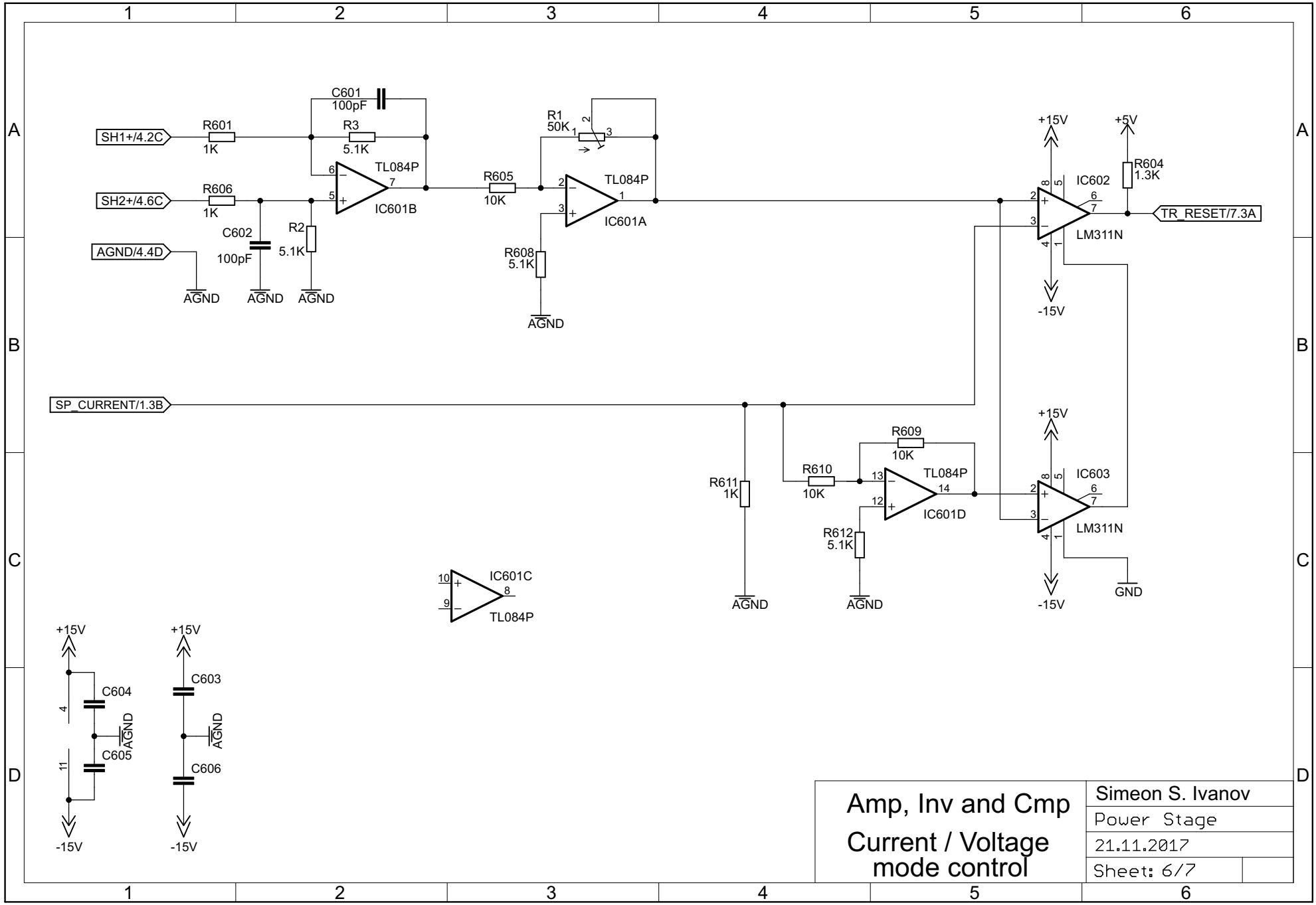

21.11.2017 г. 20:30:48 ч. D:\Developments\Elektronika\Motor Control\Projects\DC Servo\Scheme and Board\v.0.0.1\Power Stage\Power Stage.sch (Sheet: 6/7)

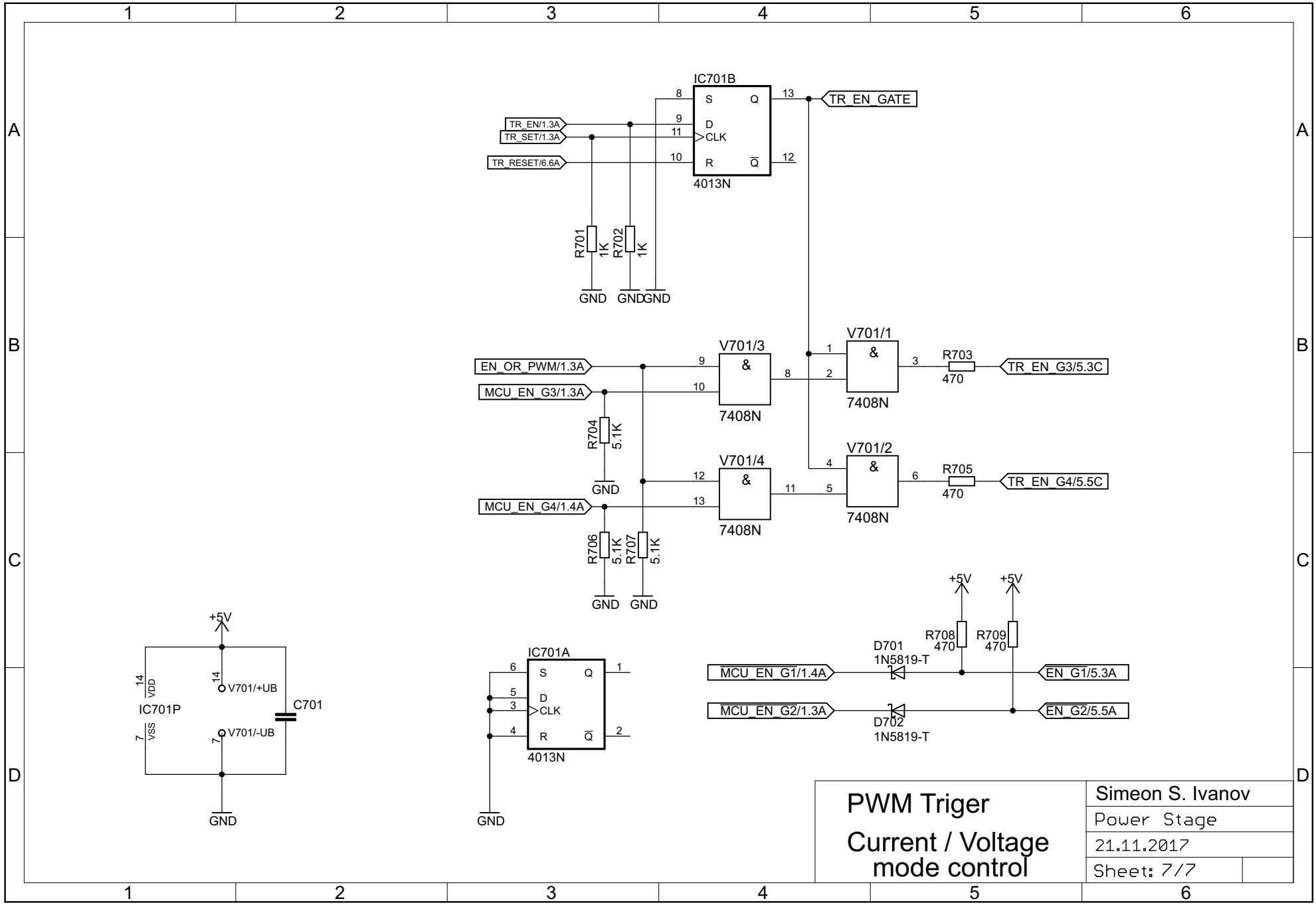

21.11.2017 г. 20:30:48 ч. D:\Developments\Elektronika\Motor Control\Projects\DC Servo\Scheme and Board\v.0.0.1\Power Stage\Power Stage.sch (Sheet: 7/7)