CANopen Communication Integrated Stepper Motor Driver

User Manual

Table of Contents

I. Overview

1.1 Product Introduction

1.2 Product Features

1.3 Application Fields

II. Performance Indicators (Electrical, Mechanical, and Environmental)

2.1 Electrical Characteristics

2.2 Operating Environment

2.3 Product Dimensions and Motor Matching

2.4 Installation Method

III. Driver Ports and Wiring

3.1 Port Definition

3.2 Input/Output Port Wiring Diagram

IV. CANopen Protocol

4.1 CANopen Protocol Overview

4.2 Driver Control Protocol CiA 402

V. Object Dictionary

5.1 Manufacturer Defined Object Dictionary

5.2 CiA402 Object Dictionary

VI. Fault Alarm Exclusion

VII. Appendix 1: Quick Guide to Writing Motion Control Function Blocks

VIII. Common Problems

8.1 Common Problems in Applications and Solutions

8.2 Driver FAQ

IX. Product Warranty Terms

I. Overview

1.1 Product Introduction

UC42 is a high-integration integrated stepper motor driver launched by adampower(www.adampower.de). It supports CANopen protocol's CiA301 and CiA402 sub-protocols. It can be connected to host computers such as PLCs, industrial computers, and controllers using only two communication wires. Through built-in motion control instructions, a network of up to 100 axes of stepper motors can be realized.

UC42 adopts the latest 32-bit DSP digital chip, possessing advanced drive control algorithms and noise suppression technology, ensuring smooth motor operation, low noise, and controllable temperature. Users can set any ID address within 1-255 and any current value within 0-8A through the host computer.

The UC42 bus-type driver has a maximum output peak current of 2.5A and can drive 42-specification and smaller two-phase open-loop stepper motors. The product is an integrated design that can be combined with a 42 stepper motor to form an integrated unit. UC42 can be set with 1-256 subdivisions and adopts built-in micro-stepping technology. Even under low subdivision conditions, it can achieve high subdivision effects, ensuring uniform motor step distance and no size-step issues.

UC42 has 3 input signal ports and 2 output signal ports, supporting position, speed, and homing control modes with a maximum communication rate of 1Mbps. It is particularly suitable for long-distance multi-axis applications, reducing wiring and enhancing driver reliability.

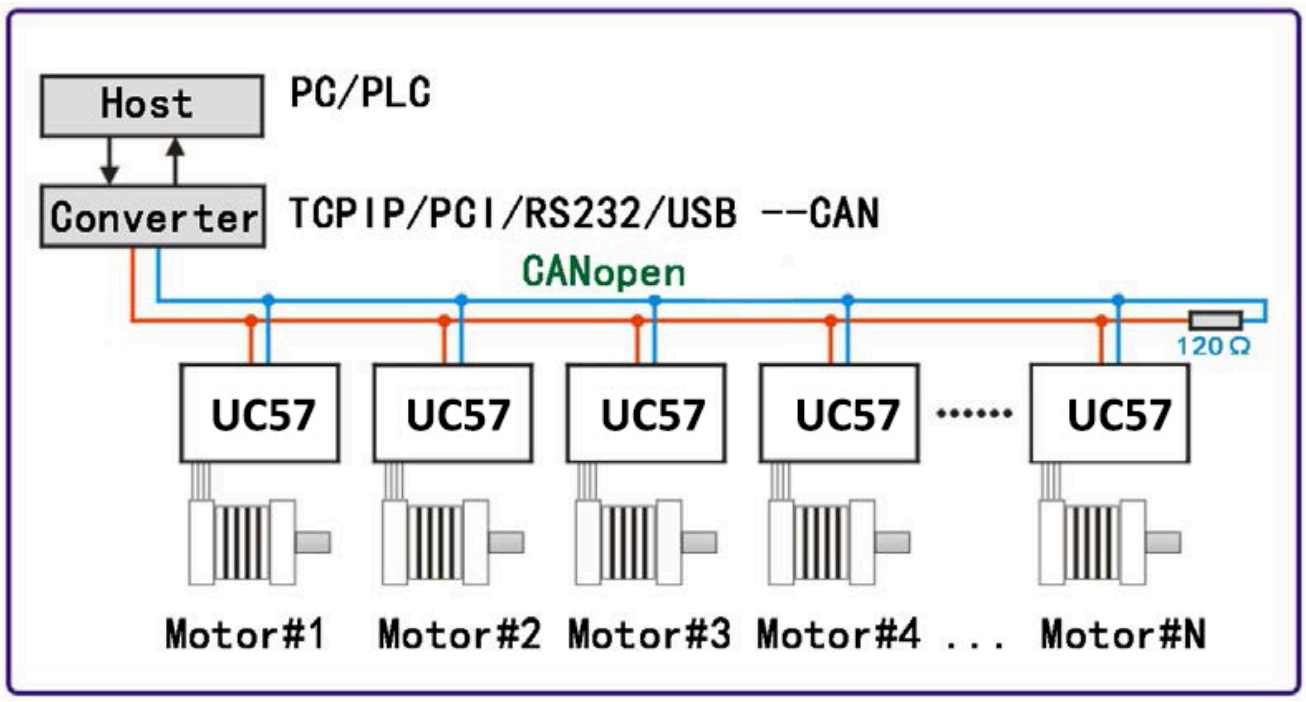

1.2 Product Features

- New generation 32-bit DSP technology, high cost-performance, good stability, low noise, low vibration.
- Supports CANopen protocol CiA301 and CiA402 sub-protocols, capable of mounting up to 100 devices.
- Current, subdivision, and shaft lock current can be set via commands; control motor start/stop and query real-time status.
- Built-in single-axis controller function: Users can set starting speed, acceleration time, deceleration time, maximum speed, and total pulse count via the bus to realize trapezoidal acceleration/deceleration position control.
- Supports Position Control, Speed Control, and Homing operating modes.
- 3 optically isolated programmable input interfaces to receive external control signals for enable, start/stop, emergency stop, and limit functions.
- 2 optically isolated programmable output interfaces to output driver status and control signals.
- Smooth and precise current control, low motor heating.
- Motor current is halved when stepping pulses stop for more than 200ms.
- Excellent stability at low frequencies and small subdivisions.
- Operating voltage range DC 12-36V, output peak current range 0.1-2.5A.
- Protection functions for overvoltage, undervoltage, and overcurrent.

1.3 Application Fields

Mainly used in electronic production equipment, semiconductors, medical instruments, environmental protection equipment, automatic testing equipment, small automatic processing equipment, and other automation equipment with many motor axes and compact space requirements.

II. Performance Indicators (Electrical, Mechanical, and Environmental)

2.1 Electrical Characteristics

UC42 Parameter	Minimum	Typical	Maximum	Unit
Continuous Output Current	0.1	-	2.5	A
Input Power Voltage	12	24	36	VDC
Logic Input Current	2	5	10	mA
Logic Input Voltage	5	5	24	Vdc
Pulse Frequency	0	-	100	kHz
Insulation Resistance	100	-	-	MΩ

2.2 Operating Environment

Parameter	Specification
Cooling Method	Heat sink cooling
Operating Occasion	Keep away from other heating equipment as much as possible; avoid dust, oil mist, corrosive gases, and strong vibration places; combustible gases and conductive dust prohibited.
Operating Environment Temperature	0°C ~ 50°C
Humidity	40—90% RH (Non-condensing)
Vibration	10~55Hz/0.15mm
Storage Temperature	-20°C ~ +80°C

2.3 Product Dimensions and Motor Matching

UC42 driver can be integrated with 42-specification stepper motors. Our company provides 0.35Nm, 0.5Nm, 0.7Nm integrated motor products. If purchasing only the UC42 driver and the equipment has requirements for low-speed vibration, it is recommended to contact us for parameter matching.

Standard Integrated Unit Basic Parameters:

Product Model	Motor Holding Torque (Nm)	Body Length (mm)	Features
UC42-03	0.35	40	1. Saves wiring; 2. Motor parameters written into control algorithm;
UC42-05	0.5	48	
UC42-07	0.7	60	

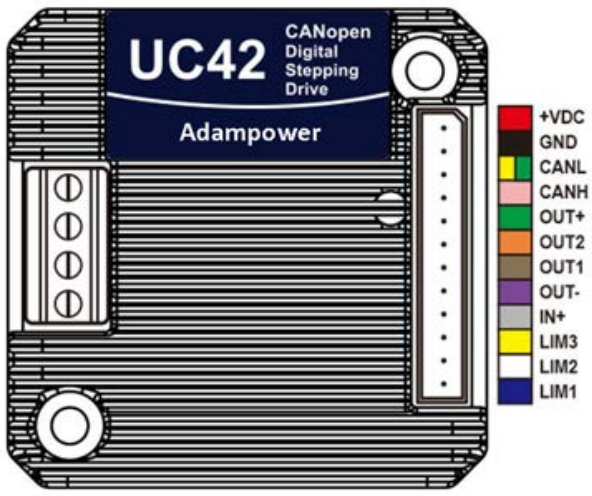

2.4 Installation Method

When installing the driver, please use upright side mounting to create strong air convection on the radiator surface; if necessary, install a fan near the driver for forced cooling to ensure the driver works within a reliable operating temperature range (Driver reliable operating temperature is usually within 60°C, motor operating temperature is within 80°C).

III. Driver Ports and Wiring

3.1 Port Definition

3.1.1 Control Signal Input/Output Port (CN1)

Port	Pin	Symbol	Name	Function
Input Signal	1	IN1	Input Port, Default Positive Limit	Supports 5/24VDC control signals, limited to NPN, OC, or C-type signal input. Port function supports software modification.
	2	IN2	Input Port, Default Home	
	3	IN3	Input Port, Default Negative Limit	
	4	IN-	Input Signal Power Negative	Signal power common negative terminal.
Output Signal	5	OUT-	Output Signal Power Negative	Common Terminal
	6	OUT1	Output Signal, Default Alarm	High current output, built-in pull-up resistor and freewheeling diode.
	7	OUT2	Output Signal, Default Driver Status	
	8	OUT+	Output Signal Power Positive	Common Terminal
Communication	9	CANH	Communication Port	CANH Communication Line
	10	CANL	Communication Port	CANL Communication Line
Power	11	GND	Power Negative	Power Supply Ground
	12	VDC	Power Positive	Recommended Voltage 24VDC

3.1.2 Motor Output Port (CN2)

Port	Pin	Symbol	Name	Function
Motor Interface	1	A+	Motor Phase Wires	Connect to the A and B windings of a 2-phase hybrid stepper motor according to the motor drawing. Suitable for driving 42 series hybrid stepper motors.
	2	A-		
	3	B+		
	4	B-		

3.1.3 Status Indicator Light (CN3)

Port	Fault Type	Flash Count	Function
CN3	Normal	0	No fault, indicator light stays on.
	Overcurrent	1	Overcurrent or phase-to-phase short circuit fault.
	Overvoltage	2	Overvoltage fault (Voltage > 43VDC).
	Hardware Fault	3	Hardware fault.
	Phase Loss Fault	4	Motor open circuit or poor contact fault.
	EEPROM Error	5	EEPROM error.
	Undervoltage Fault	6	Undervoltage (Voltage < 9VDC).

Note: The indicator light flashes in a cycle of 3 seconds. When the fault is cleared by the user, the indicator light stays on constantly.

3.2 Input/Output Port Wiring Diagram

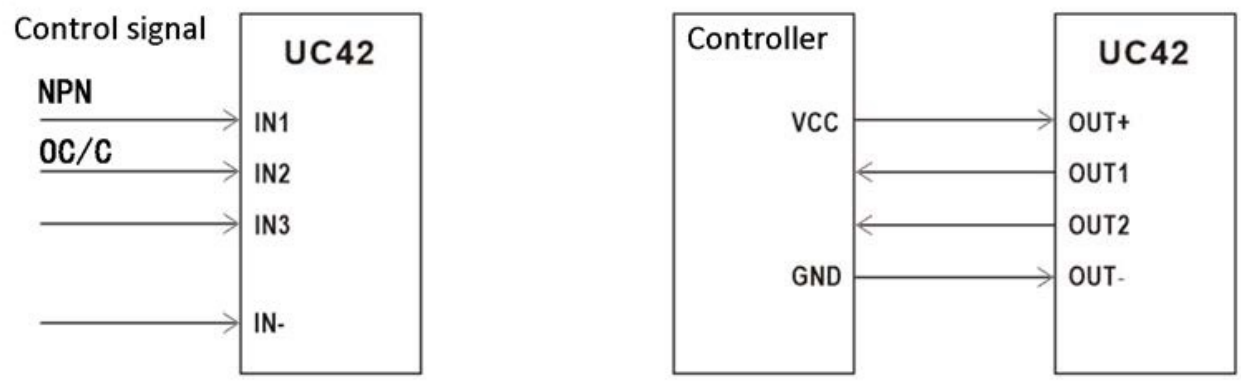

Note: The input level pulse width needs to be greater than 10ms, otherwise the driver may not respond normally.

IV. CANopen Protocol

4.1 CANopen Protocol Overview

4.1.1 CAN Bus and CANopen

CAN is the abbreviation of Controller Area Network. Originally designed by German BOSCH company for automobile monitoring and control, CAN application has expanded beyond the automotive industry to process industry, mechanical industry, robotics, CNC machine tools, medical equipment, and sensors.

Compared with other buses, the CAN bus has the following characteristics:

- **Multi-master Control:** When the bus is idle, all units can start sending messages. When multiple units start sending simultaneously, the unit sending the high-priority ID message obtains the transmission right.
- **Communication Speed:** Suitable communication speed can be set according to the network scale. CAN bus supports communication speeds up to 1Mbit/s.
- **Communication Verification:** CAN protocol uses CRC and provides corresponding error handling functions to ensure data communication reliability.
- **Error Detection, Notification, and Recovery:** All units can detect errors. A unit detecting an error immediately notifies all other units. Simultaneously, CAN can judge the error type. When continuous data errors occur on the bus, the unit causing the fault can be isolated from the bus.

The CAN bus communication interface specifies the physical layer and data link layer functions of the CAN protocol but does not specify the application layer. It is incomplete and requires a high-layer protocol to define how to use the 11/29-bit identifier COB-ID and 8-byte data in CAN messages. Therefore, the UC42 driver introduces the CANopen communication protocol.

CANopen protocol is one of the standards defined by CAN-in-Automation (CiA) and gained wide recognition shortly after release. Especially in Europe, CANopen is considered the leading standard in CAN-based industrial systems.

CANopen protocol consists of a series of sub-protocols, divided into communication sub-protocols and device sub-protocols. The communication sub-protocol proposes the concept of Object Dictionary and defines objects and parameters in the communication sub-protocol area. Every CANopen device must at least comply with the communication sub-protocol. Based on the communication sub-protocol, device sub-protocols are expanded according to different industries or device application fields. CiA301 is the most basic communication sub-protocol, standardizing the CANopen network framework and defining communication methods and behavior specifications between different CANopen devices. The UC42 driver supports the CiA 301 communication sub-protocol and the CiA 402 device sub-protocol for drivers.

4.1.2 CANopen Function Description

Object Dictionary

Object Dictionary (OD) is the core concept of CANopen. Every CANopen device in the network has an object dictionary. The object dictionary

is an ordered collection of data objects describing all communication and device parameters, located via a 16-bit index and an 8-bit sub-index.

Operation Type	Command Word Rules
Read	The command word for message transmission is always 0x40
	If the received data is 1 byte, the received command word is 0x4F.
	If the received data is 2 bytes, the received command word is 0x4B.
	If the received data is 4 bytes, the received command word is 0x43.
	If there is an error in the received data, the received command word is 0x80.
Write	If the data to be sent is 1 byte, the sending command word is 0x2F.
	If the data to be sent is 2 bytes, the sending command word is 0x2B.
	If the data to be sent is 4 bytes, the sending command word is 0x23.
	If the message is sent successfully, the received command word is 0x60.
	If the message is sent unsuccessfully, the received command word is 0x80.

Message Format

As an application layer protocol for the CAN bus, CANopen protocol mainly defines the arbitration field (11 bits) and data field (up to 8 bytes) in CAN messages.

```
COB-ID | Byte 0 | Byte 1 | Byte 2 | Byte 3 | Byte 0 | Byte 1 | Byte 2 | Byte 3
  601  |   40   |   60   |   61   |   00   |   00   |   00   |   00   |   00
```

In CANopen protocol, the 11-bit arbitration field is divided into the high 4-bit Function Code and the low 7-bit Node-ID, called COB-ID (Communication Object Identifier). The CANopen identifier structure is shown below, where the Node-ID range is 1~127.

CANopen Predefined Master/Slave Connection Set

Bit 10-7	Bit 6-0
Function Code	Node-ID

UC42 driver supports the following types of CANopen messages:

- PDO (Process Data Object) message
- SDO (Service Data Object) message
- NMT (Network Management Object) message
- SYNC (Synchronization Object) message
- EMCY (Emergency Object) message

The table below shows the function codes and corresponding COB-IDs for various messages predefined in the communication sub-protocol CiA301.

Communication Object	Function Code	COB-ID
NMT	0000	0h
SYNC	0001	80h
PDO1 (TX)	0011	181h-1FFh
PDO1 (RX)	0100	201h-27Fh
PDO2 (TX)	0101	281h-2FFh
PDO2 (RX)	0110	301h-37Fh
PDO3 (TX)	0111	381h-3FFh
PDO3 (RX)	1000	401h-47Fh
PDO4 (TX)	1001	481h-4FFh
PDO4 (RX)	1010	501h-57Fh
SDO (TX)	1011	581h-5FFh
SDO (RX)	1100	601h-67Fh
Heart Beat	1110	701h-77Fh

Process Data Object (PDO)

SDO protocol is used for object dictionary operations and processing data with low real-time requirements. Data with high real-time requirements is usually transmitted via PDO. PDO communication is based on the Producer/Consumer model, sending data from one device (producer) to another device (consumer) or many other devices (broadcast), and is an unacknowledged transmission mode. Data transmission is limited to 1 to 8 bytes. CANopen devices complete receiving or sending by describing two parameters of PDO: Communication Parameter

and Mapping Parameter. UC42 driver supports 4 RPDOs and 4 TPDOs and describes the communication parameters and mapping parameters of each PDO port according to CiA 301 sub-protocol.

Service Data Object (SDO)

SDO messages are mainly used to access the device's object dictionary and configure devices in the CANopen network. SDO communication is based on the Client/Server model, where sent messages must be acknowledged by the receiver. The accessor is called the Client, and the device whose object dictionary is accessed and responds to read/write requests is called the Server. The protocol stipulates that reading the value of an object dictionary is called Upload, while modifying the value of a parameter is called Download. UC42 driver supports both Fast SDO and Normal SDO protocols described in CiA301.

Network Management Object (NMT)

NMT network management is based on a Master/Slave structure. The master station can control the state machine of the slave station via NMT messages. After a CANopen device is powered on or reset, it first enters the Initialization state. After program initialization ends, the device automatically sends a Boot-Up message and then automatically enters the Pre-Operational state. Thereafter, the slave device switches between states according to NMT messages sent by the master station.

Synchronization Object (SYNC)

SYNC provides a reference clock for the network to synchronize devices. SYNC is a Producer/Consumer communication relationship. The SYNC object is sent by one SYNC producer, and all other devices in the network can receive it. If devices in the network support synchronized PDO functionality, SYNC can be used to achieve simultaneous actions of multiple devices. The COB-ID of the SYNC message is 0x80, having a very high priority, ensuring normal SYNC transmission. Also, SYNC messages can contain no data to reduce the data volume of SYNC messages.

Emergency Object (EMCY)

Devices can report internal faults to the CANopen network via the Emergency Object (EMCY). EMCY belongs to the Producer/Consumer communication model, where all devices in the network can consume this message. The EMCY message occupies the full 8 bytes of data. Bytes 0 and 1 are the Error Code, corresponding to various error types. Byte 2 is the Error Register, stored in object dictionary unit 1001h, corresponding to various types of faults in the device. Bytes 3~7 content is the manufacturer-defined error field, which can be specific fault types. Through the EMCY object, the master station can conveniently grasp specific fault situations of the slave station.

4.2 Driver Control Protocol CiA 402

4.2.1 CiA402 State Machine

The CiA402 protocol defines a standard state machine for motion control devices, as well as various operating modes and their definitions in the object dictionary.

The standard state machine describes the device states and possible control sequences of the driver. Each state represents a specific internal or external behavior, and the device state determines which commands can be received.

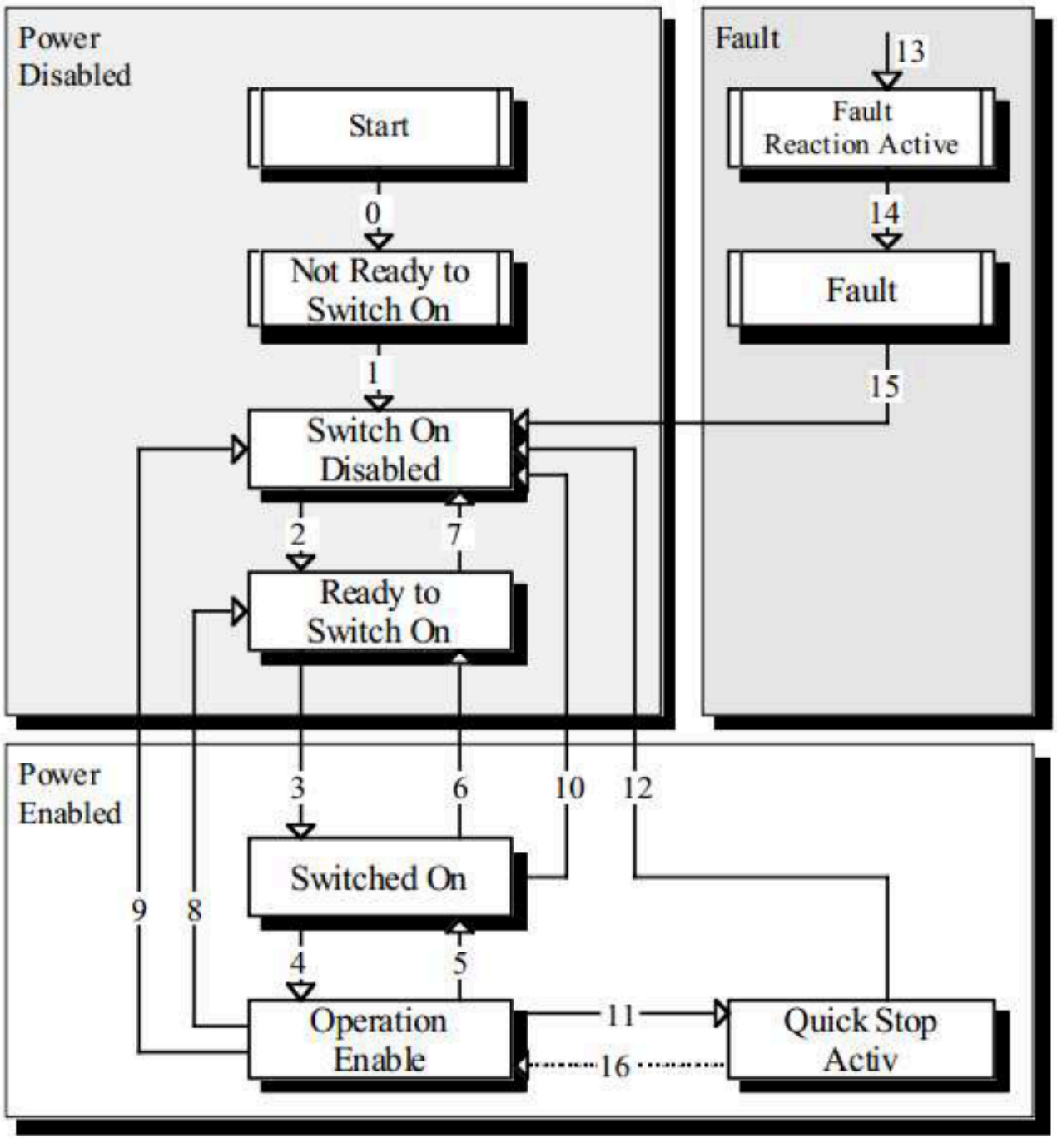

State Descriptions:

State Name	Description
Not Ready to Switch on	Device power is on, driver is initialized, internal self-test is executed, and brake is activated.
Switch on Disabled	CANopen communication has started, SDO communication service can be used to set driver parameters.
Ready to Switch on	Driver continues parameter setting, motor is not excited.
Switched on	Driver motor ready state; output stage voltage is switched on last in this state, but drive function cannot be executed.
Operation Enable	Driver motor enabled, driver normal operation state, controls motor according to control mode.
Quick Stop Active	Quick stop function is activated, drive function has started, and motor is also started.
Fault Reaction Active	Driver detects an alarm occurrence, stops according to set mode, motor still enabled.
Fault	Error occurred, allows changing driver parameters.

The driver state machine is controlled via bits 0~3 and bit 7 of the Control Word (Object 6040h), as described below:

Command	Bit7	Bit3	Bit2	Bit1	Bit0	State Transition
Shutdown	0	X	1	1	0	2, 6, 8
Switch on	0	0	1	1	1	3
Switch on + Enable operation	0	1	1	1	1	3 + 4
Disable voltage	0	X	X	0	X	7, 9, 10, 12
Quick stop	0	X	0	1	X	7, 10, 11
Disable Operation	0	0	1	1	1	5
Enable Operation	0	1	1	1	1	4, 16
Fault reset	0→1	X	X	X	X	15

The states in the state machine can be displayed via bits 0~3, bit 5, and bit 6 of the Status Word (Object 6041h), as described below:

State	Bit6	Bit5	Bit3	Bit2	Bit1	Bit0
Not ready to switch on	0	X	0	0	0	0
Switch on disabled	1	X	0	0	0	0
Ready to switch on	0	1	0	0	0	1
Switched on	0	1	0	0	1	1
Operation enabled	0	1	0	1	1	1
Quick stop active	0	0	0	1	1	1
Fault reaction active	0	X	1	1	1	1
Fault	0	X	1	0	0	0

4.2.2 Control Word and Status Word

The start/stop control commands and status description of the driver are mainly implemented through the Control Word 6040h and Status Word 6041h.

Control Word Common Commands:

Value	Function Description
00	Initialization Step 0: At this time, 6041 low 4-bit status is 0000, motor released;
06	Initialization Step 1: At this time, 6041 low 4-bit status is 0001, motor released;
07	Initialization Step 2: At this time, 6041 low 4-bit status is 0011, motor enabled;
0F	Initialization Step 3: At this time, 6041 low 4-bit status is 0111, motor enabled;
0F	Start command in Speed Mode (6061=3);
0F->1F	Start command in Homing Mode (6061=6);
0F->1F	Absolute motion start command in Position Mode (6061=1);
4F->5F	Relative motion start command in Position Mode (6061=1);

Status Word Bit Definitions:

Bit	Definition	Description
Bit7	Driver Status	0: Driver normal; 1: Driver alarm;
Bit8	Homing Status	0: Homing not complete; 1: Homing complete;
Bit11	Control Word Echo	0: Indicates Bit4 of 6040h is 0; 1: Indicates Bit4 of 6040h is 1;
Bit13	Motor Status	0: Motor released; 1: Motor enabled;

Bit	Definition	Description
Bit14	Motion Status	0: Motor stopping; 1: Motor running;
Bit15	Position Status	0: Position mode motion not in position; 1: Position mode motion in position;

Example: Driver Initialization after Power-on.

Master Station	Slave Station	Function
00: 01 00	NMT Initialization	NMT Initialization
601: 2B 40 60 00 00 00 00 00	581: 60 40 60 00 00 00 00 00	6041: xxxx xxxx xxxx 0000
601: 2B 40 60 00 06 00 00 00	581: 60 40 60 00 00 00 00 00	6041: xxxx xxxx xxxx 0001
601: 2B 40 60 00 07 00 00 00	581: 60 40 60 00 00 00 00 00	6041: xxxx xxxx xxxx 0011
601: 2B 40 60 00 0F 00 00 00	581: 60 40 60 00 00 00 00 00	6041: xxxx xxxx xxxx 0111

4.2.3 Operating Modes

CANopen sets the driver operating mode through Object 6060h (Mode of Operation) and reflects the current operating mode status through Object 6061h (Mode of operation display). UC42 currently supports 3 operating modes: Profile Position Mode, Profile Velocity Mode, Homing Mode.

Index	SubIndex	Name	Type	Attr	PDO Map	Range	Default
6060h	00	Operating Mode	I8	RW	YES	0: Undefined; 1: Position; 3: Velocity; 6: Homing	0

4.2.4 Position Mode

Work Process Description

Position mode uses a trapezoidal acceleration/deceleration curve. Users can achieve precise position control by setting the Starting Speed (200E0010h), Maximum Speed (60810020h), Acceleration Time (60830020h), Deceleration Time (60840020h), and Total Pulses (607A0020h) via the bus.

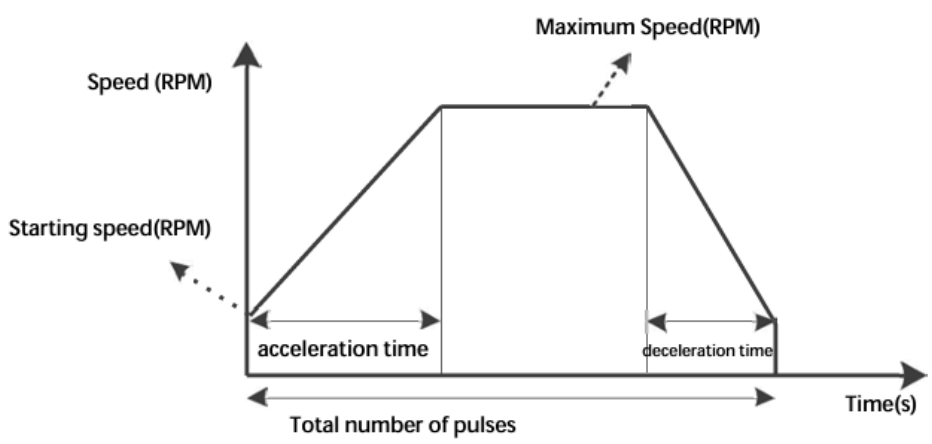

When the user-set total pulse count is small, the motor may need to decelerate before accelerating to maximum speed. The actual running curve is the solid line.

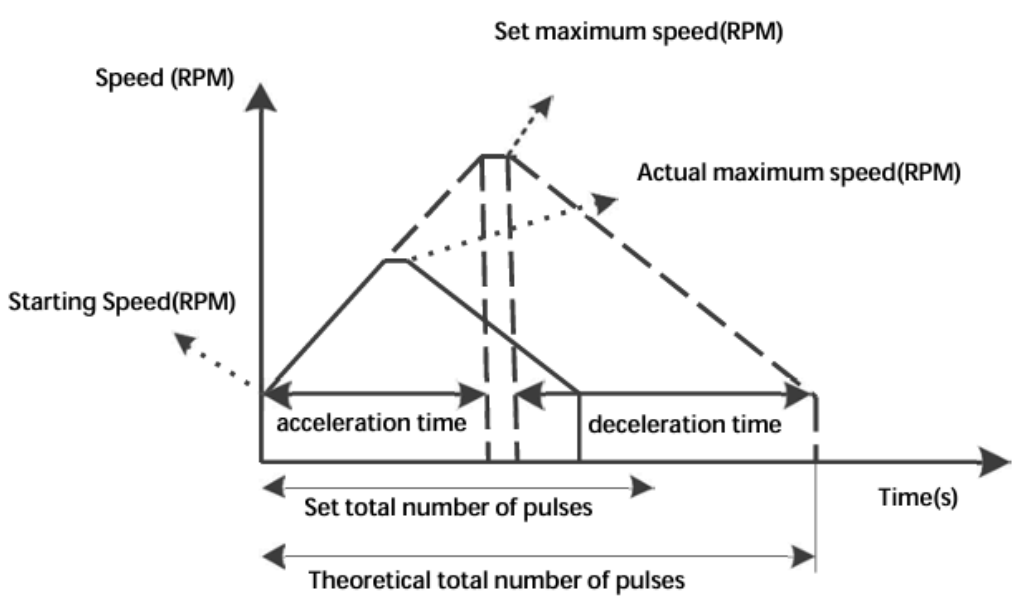

Relevant Object Dictionary Content:

Index	SubIndex	Name	Type	Attr	Range	Unit
6060h	00	Operating Mode	I8	RW	0, 1, 3, 6	-
607Ah	00	Total Pulses	I32	RW	-1000000~1000000	Pulses
6081h	00	Max Speed	U32	RW	5-3000	r/min
6083h	00	Accel Time	U32	RW	1-2000	rps/s

Index	SubIndex	Name	Type	Attr	Range	Unit
6084h	00	Decel Time	U32	RW	1-2000	rps/s

Control Word and Status Word in Position Mode

Bit	Name	Value	Description
Bit4	New set-point	0	No target position assumed
		1	Target position assumed
Bit5	Change set immediately	0	Complete current position then start next
		1	Interrupt current position and start next
Bit6	abs/rel	0	Target position is an absolute value
		1	Target position is a relative value
Bit8	Halt	0	Terminate current position
		1	Decelerate to stop using set deceleration

Note: Based on the table above, the absolute position motion command control word is sent as 0x0F->0x1F, and the relative position motion command control word is sent as 0x4F->0x5F.

Status Word Bits 10 and 15:

Bit	Name	Value	Description
Bit10	Target reached	0	Halt=0: Target not reached; Halt=1: Axis decelerating;
		1	Halt=0: Target reached; Halt=1: Axis speed is 0;
Bit12	Set-point acknowledge	0	Target position pending
		1	Target position effective
Bit15	Pend	0	Not in position
		1	In position

Example: Relative motion with Accel 100ms, Decel 100ms, Max Speed 60r/min, Total Pulses 5000.

Master	Slave	Function
601: 2B 40 60 00 00 00 00 00	...	Initialize Servo State Machine
601: 23 83 60 00 64 00 00 00	...	Set Accel Time 100
601: 23 84 60 00 64 00 00 00	...	Set Decel Time 100
601: 23 81 60 00 3C 00 00 00	...	Set Max Speed 60
601: 23 7A 60 00 88 13 00 00	...	Set Pulses 5000
601: 2F 60 60 00 01 00 00 00	...	Switch to Position Mode
601: 2B 40 60 00 4F 00 00 00	...	Send Relative Motion Command 1
601: 2B 40 60 00 5F 00 00 00	...	Send Relative Motion Command 2

4.2.5 Velocity Mode

Work Process Description

The acceleration curve for velocity mode is shown below. Unlike position mode, velocity mode only requires setting Starting Speed (200E00h), Maximum Speed (60FF00h), and Acceleration Time (608300h).

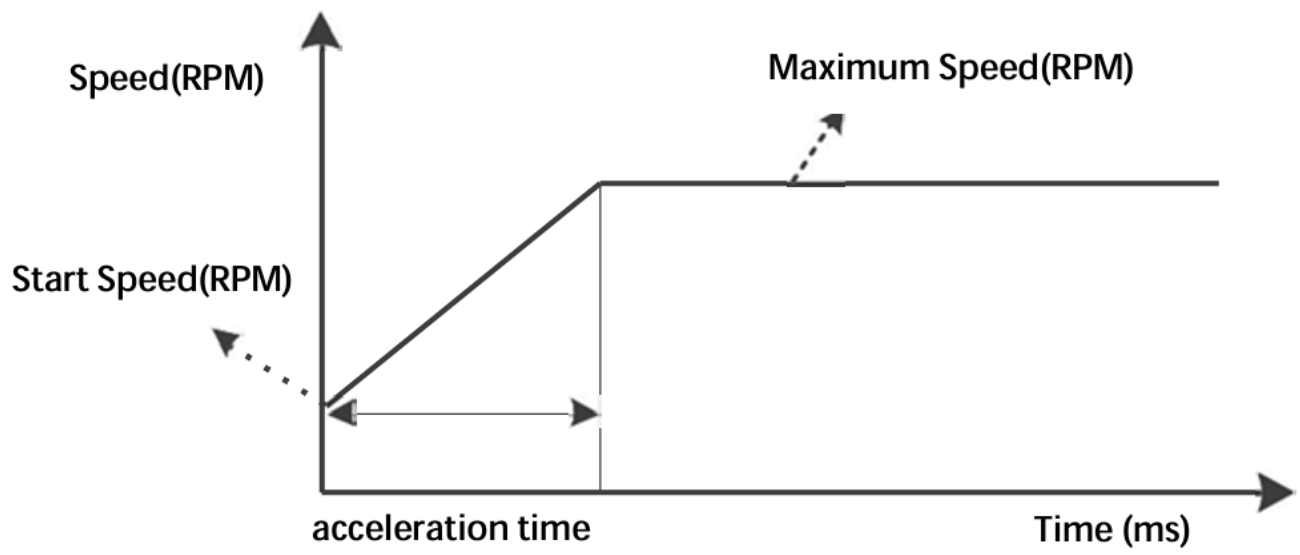

Index	SubIndex	Name	Type	Attr	Range
6060h	00	Operating Mode	I8	RW	0, 1, 3, 6
60FFh	00	Max Speed	I32	RW	-1000~1000 r/min
6083h	00	Accel Time	U32	RW	1-2000 rps/s
6084h	00	Decel Time	U32	RW	1-2000 rps/s

Control Word and Status Word

Bit	Name	Value	Description
Bit8	Halt	0	Execute motion
		1	Stop motion

Example: Rotation with Accel 100ms, Decel 100ms, Max Speed 60r/min.

Master	Slave	Function
601: 2F 60 60 00 03 00 00 00	...	Switch to Velocity Mode
601: 2B 40 60 00 06 00 00 00	...	State Machine Transition
601: 2B 40 60 00 0F 00 00 00	...	Enable Operation

4.2.6 Homing Mode

Work Process Description

In Homing mode, the home signal must be connected to the driver input. The driver internally completes the search and positioning of the mechanical home. Set Object 6060h to 6.

Relevant Object Dictionary:

Index	SubIndex	Name	Type	Range
6060h	00	Operating Mode	I8	6
6098h	00	Homing Mode	U8	17, 18, 24, 29, 41, 42
6099h	01	Homming Speed Fast	U32	0-1000 r/min
6099h	02	Homing Speed Slow	U32	0-1000 r/min
609Ah	00	Homing Accel/Decel	U32	1-2000 rps/s
607Ch	00	Home Offset	I32	-0x7FFFFFFF~0x7FFFFFFF

Currently supported Homing Modes:

- **Mode 17:** Negative limit search. Finds negative limit, stops, backs up, then slowly finds negative limit again.

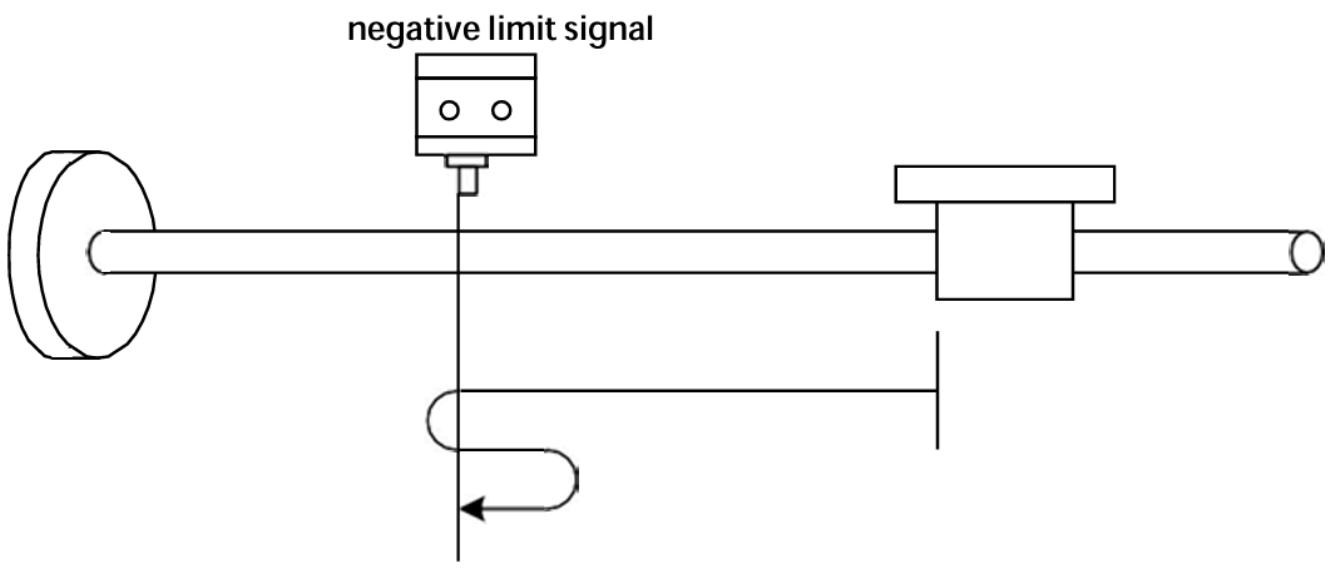

- **Mode 18:** Positive limit search. Finds positive limit, stops, backs up, then slowly finds positive limit again.

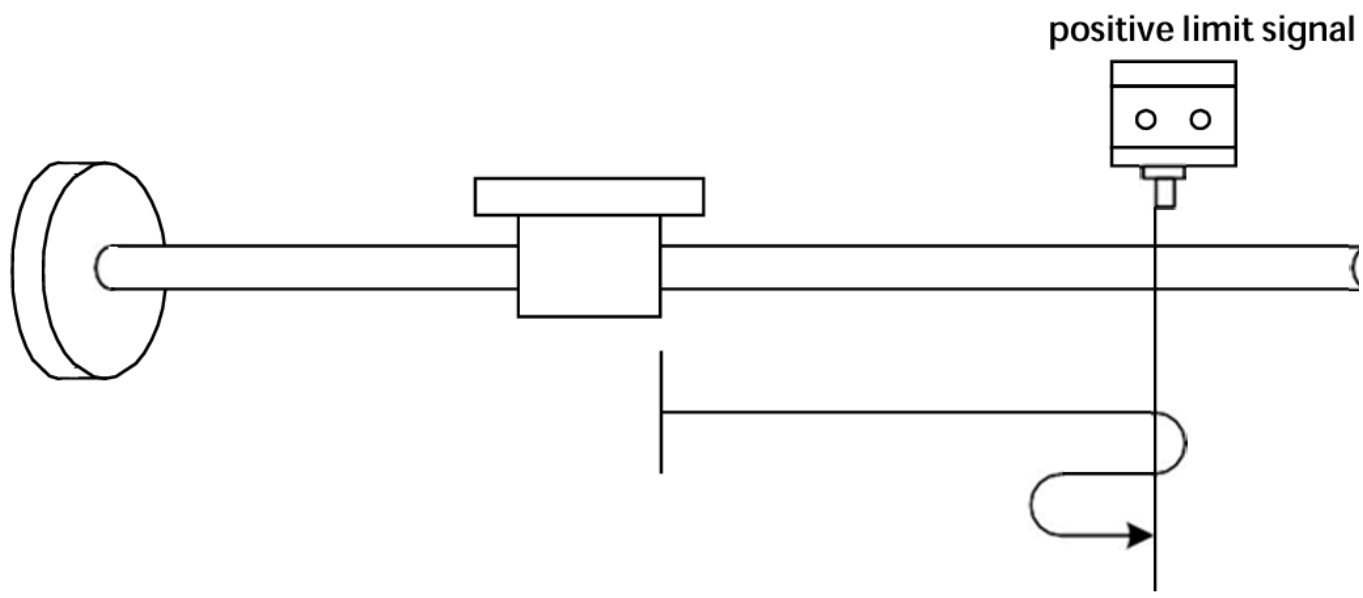

- **Mode 24:** Positive direction home search. Finds home, stops, backs up, then slowly finds home.

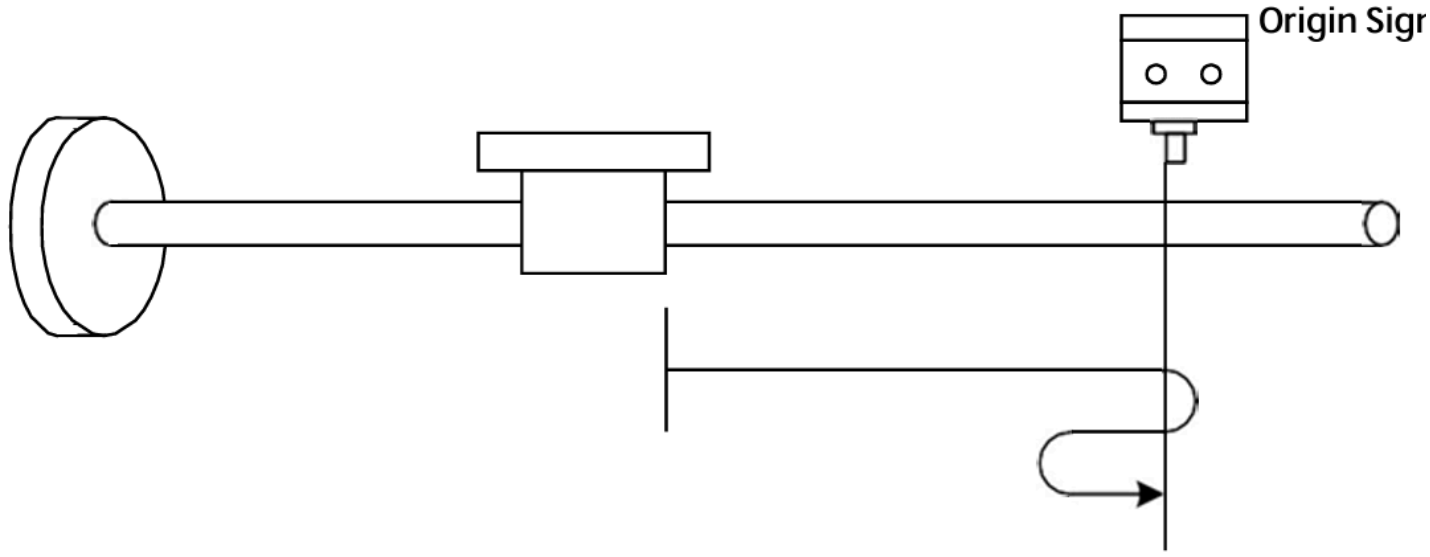

- **Mode 29:** Negative direction home search. Finds home, stops, then slowly finds home.

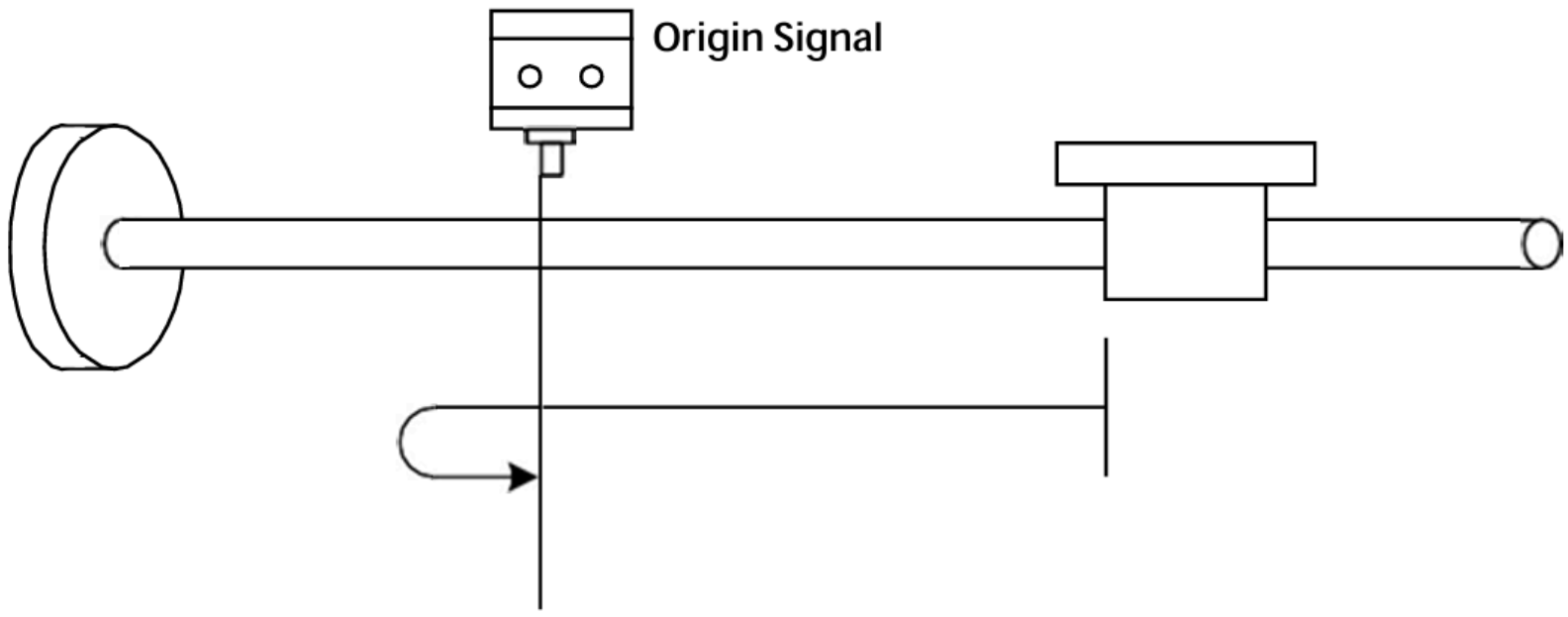

- **Mode 41:** Negative direction home search - immediate stop.

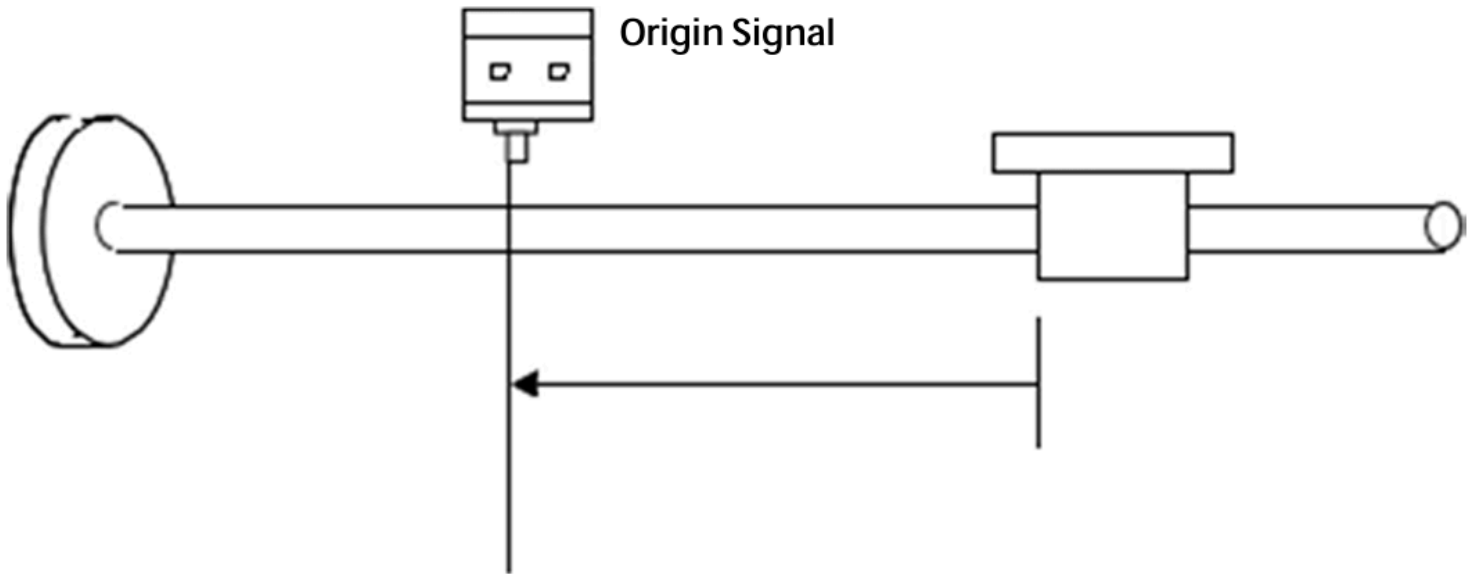

- **Mode 42:** Positive direction home search - immediate stop.

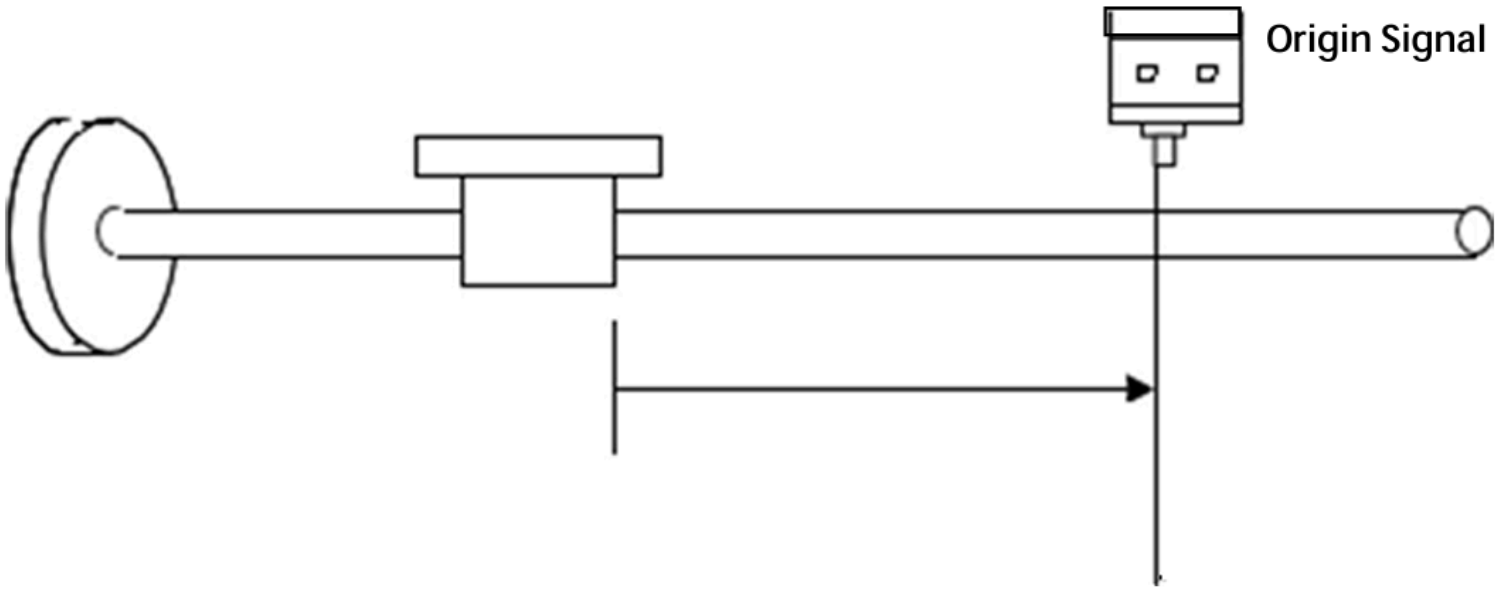

Control Word and Status Word

Bit	Name	Value	Description
Bit4	Homing operation start	0	Homing mode inactive
		0→1	Start homing mode
		1	Homing mode active
		1→0	Interrupt homing mode
Bit8	Halt	0	Execute bit4 command
		1	Stop axis using homing acceleration

Note: Homing command control word is sent as 0x0F->0x1F.

V. Object Dictionary

UC42 parameters include CiA301 (1000h~1FFF), Manufacturer Defined (2000h~2FFF), and CiA402 (6000h~6FFF).

5.1 Manufacturer Defined Object Dictionary (2000h Series)

Index	Name	Type	Attr	Description	Default
2000H	Driver Node ID	U16	RO	Set via 0x2008	-
2001H	Motor Status Register	U16	RO	0: Static; 1: Running	0
2003H	Input Signal Status	U16	RO	Bit0~Bit2: IN1~IN3 level	0
2004H	Output Signal Status	U16	RO	Bit0~Bit1: OUT1~OUT2 status	0
2005H	Current Setting	U16	RW/S	1~25 (*0.1A RMS)	15
2006H	Subdivision Setting	U16	RW/S	See table below	13
2007H	Lock Current	U16	RW/S	0: Auto half-current; 1: Full current	0

Index	Name	Type	Attr	Description	Default
2008H	Custom Node ID	U16	RW/S	1~127	1
2009H	Baud Rate Setting	U16	RW/S	0:50k; 1:100k; 2:125k; 3:250k; 4:500k; 5:1000k	2
200AH	Limit Stop Mode	U16	RW/S	0: Stop; 1: E-Stop; 2: Invalid	0
200BH	Control Mode Select	U16	RW/S	0: Bus Control	0
200CH	EEPROM Update	U16	RW	0: Update RW params to EEPROM; 1: Do not update	1
200EH	Start Speed	U16	RW	0-1000 r/min	10
200FH	Motor Enable/Release	U16	RW	0: Release; 1: Enable; 2: Invalid	2
2010H	Parameter Reset	U16	RW	0: Invalid; 1: Factory Reset; 2: Save all RW params	0
2011h	Fault Reset Command	U16	RW	0: Invalid; 1: Reset	0
2012h	Current Pos Clear	U16	RW	1: Clear current position	0
2030h	Input Terminal Config	U16	RW/S	Bit0-2: IN1-IN3 valid level (0:Default, 1:Invert)	0
203Ch	Output Terminal Config	U16	RW/S	Bit0-1: OUT1-OUT2 valid level (0:Default, 1:Invert)	0
2040H	Current Loop Kp	U16	RW/S	Unit: 0.1%	220
2041H	Current Loop Ki	U16	RW/S	Unit: 0.1%	3

Subdivision Values (2006H):

0: 200	5: 6400	10: 4000
1: 400	6: 12800	11: 5000
2: 800	7: 25600	12: 8000
3: 1600	8: 1000	13: 10000
4: 3200	9: 2000	14: 20000

5.2 CiA402 Object Dictionary

Index	Name	Type	Attr	Description	Default
603Fh	Error Code	U16	RO	Bit0: Overcurrent; Bit1: Overvolt; Bit2: Op-amp; Bit3: Phase loss; Bit4: EEPROM; Bit5: Undervolt	0
6040h	Control Word	U16	RW	Control Word	0
6041h	Status Word	U16	RO	Status Word	0
605Dh	Halt Option Code	I16	RW	0: Normal stop; 1: E-stop	0
6060h	Operating Mode	I8	RW	1: Position; 3: Velocity; 6: Homing	0
6061h	Operating Mode Display	I8	RO	Displays current mode	0
6064h	Actual Position	I32	RO	Unit: P	0
606Ch	Current Velocity	I32	RO	Unit: RPM	0
607Ah	Target Position	I32	RW	Total pulses for PP mode	5000
607Ch	Home Offset	I32	RW	Range: -1000000~1000000	0
6081h	Max Speed (PP)	U32	RW	5-1000 RPM	60
6083h	Acceleration Time	U32	RW	1-2000 rps/s	50
6084h	Deceleration Time	U32	RW	1-2000 rps/s	50
6098h	Homing Mode	U8	RW	Methods 17, 18, 24, 29, 41, 42	0
6099h/01	Homming Speed Fast	U32	RW	1-1000 RPM	120
6099h/02	Homing Speed Slow	U32	RW	1-1000 RPM	60
609Ah	Homing Accel/Decel	U32	RW	1-2000 rps/s	50
60FDh	Input Terminal Status	U32	RO	Bit0: Neg Limit; Bit1: Pos Limit; Bit2: Home	0
60FFh	Max Speed (PV)	I32	RW	Range: -1000~1000 RPM	120

VI. Fault Alarm Exclusion

UC42 driver has 6 types of alarm information. After an alarm, the indicator light flashes according to the code.

Code	Fault Info	Indicator	Reset
Err1: 0x01	Overcurrent or Phase Short	Flashes 1 time	Lock/Power Reset

Code	Fault Info	Indicator	Reset
Err2: 0x02	Overvoltage (>60VDC)	Flashes 2 times	Lock/Auto Recover
Err3: 0x03	Hardware Fault	Flashes 3 times	Lock/Power Reset
Err4: 0x04	Motor Open Circuit	Flashes 4 times	Lock/Power Reset
Err5: 0x05	EEPROM Error	Flashes 5 times	Lock/Power Reset
Err6: 0x06	Undervoltage	Flashes 6 times	Lock/Auto Reset

VII. Appendix 1: Quick Guide to Writing Motion Control Function Blocks

For controllers that do not have built-in CiA402 libraries but support CANopen communication, users need to write function blocks. Below are common functions.

Function List:

Function Name	INPUT	OUTPUT	Description
MC_POWER	6040h	6041h	Driver Enable
MC_RESET	6040h	-	Driver Reset
MC_STOP	6040h	-	Stop Command
MC_HOME	6040h, 6060h, 6098h...	6041h	Homing Command
MC_MOVABS	6040h, 6060h, 607Ah...	6041h	Absolute Positioning
MC_MOVREL	6040h, 6060h, 607Ah...	6041h	Relative Positioning
MC_MOVVEL	6040h, 6060h, 60FFh...	6041h	Velocity Motion
MC_JOG	6040h, 6060h, 60FFh...	6041h	JOG Motion

MC_POWER (Enable):

1. Write 6040h = 0x00 (Wait for 6041h bits 0-3 = 0000)
2. Write 6040h = 0x06 (Wait for 6041h bits 0-3 = 0001)
3. Write 6040h = 0x07 (Wait for 6041h bits 0-3 = 0011)
4. Write 6040h = 0x0F (Wait for 6041h bits 0-3 = 0111)

MC_RESET:

1. Set 6040h bit 7 = 0.
2. Set 6040h bit 7 = 1.

MC_MOVABS (Absolute Position):

1. Set 6060h = 1 (Position Mode).
2. Wait for 6061h = 1.
3. Write motion params (607Ah, 6081h, 6083h, 6084h).
4. Write 6040h = 0x0F.
5. Wait for 6041h bit 12 = 0.
6. Write 6040h = 0x1F (Trigger).
7. Wait for 6041h bit 12 = 1.
8. Write 6040h bit 4 = 0 (Reset trigger).
9. Wait for 6041h bit 10 = 1 (Target reached).

VIII. Common Problems

8.1 Common Problems in Applications and Solutions

Phenomenon	Possible Problem	Solution
Motor not rotating	Power not on; Enable not active; Current too low; Protection active; wiring error.	Check power; Check enable signal; Check current setting; Re-power; Check wiring.
Inaccurate Position	Signal interference; Grounding issue; Motor wire open; Subdivision error.	Eliminate interference; Reliable grounding; Check wiring; Correct subdivision.
Stalling during acceleration	Accel time too short; Torque too low; Voltage too low.	Increase accel time; Reduce load or change motor; Increase voltage.

8.2 Driver FAQ

1) Advantages of subdivision drivers?

- Improves step uniformity and control precision.
- Reduces motor vibration.
- Reduces torque ripple and increases output torque.

2) Why does the motor only run in one direction?

- Direction signal might be too weak, or wiring polarity is wrong, or the signal voltage is too high burning the current limiting resistor.
- Pulse mode mismatch. If signal is Pulse/Direction, the driver must be set to this mode.

IX. Product Warranty Terms

1. One Year Warranty Period

Our company provides a one-year warranty from the date of shipment for material and process defects in our products. During the warranty period, we provide free repair services for defective products.

2. Exclusions from Warranty

- Improper wiring, such as reversed power polarity or hot-plugging.
- Unauthorized modification of internal components.
- Use beyond electrical and environmental requirements.
- Poor environmental heat dissipation.

3. Repair Process

Please contact our company's sales representative.

4. Warranty Limitations

The warranty scope of our products is limited to the device and workmanship (i.e., consistency). We do not guarantee that our products are suitable for the customer's specific application, as suitability depends on the technical requirements, operating conditions, and environment of that application.