Equivalent Circuit Models of Near-Field Coupling between Electrically Small Antennas and TEM Cells

Simon Prato
Institute of Fundamentals and Theory in Electrical Engineering
Graz University of Technology
Graz, Austria
simon.prato@student.tugraz.at

Dominik Kreindl
Institute of Fundamentals and Theory in Electrical Engineering
Graz University of Technology
Graz, Austria
dominik.kreindl@student.tugraz.at

Thomas Bauernfeind
Institute of Fundamentals and Theory in Electrical Engineering
Graz University of Technology
Graz, Austria
t.bauernfeind@tugraz.at

***Abstract*—Light sources in optical sensor packages of integrated circuits (ICs) require apertures for light transmission and, therefore, cannot be effectively shielded from electromagnetic waves. Furthermore, bond wires are implemented, which form electrically small structures that emit unwanted radiation and thereby behave as antennas. Transverse-electromagnetic (TEM) cells are standardized environments for characterizing these emissions. This paper develops equivalent circuit models (EQCs) for the near-field coupling between electrically small antennas and a TEM cell. Lumped elements effectively model such antennas and their coupling paths due to their small size in comparison to the wavelength. The EQC component values are extracted from finite element method (FEM) simulations. The coupling behavior described by the EQC are compared with that from FEM simulations of the TEM cell, demonstrating good agreement and confirming that the proposed models correctly represent both the electric and magnetic coupling mechanisms.**

***Index Terms*—Electromagnetic Compatibility, TEM Cell, Equivalent Circuit Model, Dipole Moments, Near-Field Coupling, Electrically Small Antenna.**

I. Introduction

A bonding wire is typically required to connect the semiconductor chip to its package in order to route signals to the surrounding circuit. Because of their geometry, bond wires inevitably form current loops that cause unwanted electromagnetic interference (EMI) radiation at fast signal rise times. A straightforward remedy is to surround the device with electrically conductive shielding [1]. However, this approach is inapplicable to optical sensor ICs that incorporate vertical-cavity surface-emitting lasers (VCSELs) [2]: the optical apertures required for light emission and reception prevent a complete metallic enclosure.

An alternative strategy is to characterize the parasitic radiators by their dipole moments and to exploit geometric cancellation effects at the bond-wire level. This requires a fundamental understanding of how electrically short structures couple to the IC stripline test environment [4]. Because the IC stripline operates on the same TEM wave-propagation principle as a generic TEM cell [3], a rectangular TEM cell is used as a computationally tractable surrogate for initial FEM investigations.

Since bond-wire dimensions are small compared to the free-space wavelength up to 3 GHz, these structures are electrically short and can be fully characterized by an electric dipole moment $\mathbf{m}_e$ and a magnetic dipole moment $\mathbf{m}_m$. Replacing the antenna by its dipole moments and modelling the coupling to the TEM cell with lumped elements yields an equivalent circuit model (EQC) that provides direct physical insight into the coupling mechanisms and runs orders of magnitude faster than a full-wave FEM simulation.

This paper derives EQCs for two representative test structures—a monopole antenna (dominant capacitive coupling) and a gapped-loop antenna (combined capacitive and inductive coupling)—and validates the predicted dipole moments against full-wave TEM cell FEM simulations.

II. TEM Cell Measurement and Dipole Moment Extraction

The TEM cell [3] provides a controlled propagation environment for characterizing IC emission. As shown in Fig. 1, the device under test (DUT) is placed between the septum and the cell enclosure. The septum acts as the inner conductor of a coaxial-like transmission line with wave impedance $Z_W = 50\,\Omega$. A vector network analyzer (VNA) records the terminal voltages U_1 and U_2 at the two output ports.

For electrically short DUTs the effective electric and magnetic dipole moments can be extracted directly from the port voltages [5]:

$$|m_e| = \frac{|U_1 + U_2|\, h}{Z_W}, \tag{1}$$

$$|m_m| = \frac{|U_1 - U_2|\, h\, Z_0}{Z_W}, \tag{2}$$

where h is the septum–DUT distance, $Z_W = 50\,\Omega$, and $Z_0 = 377\,\Omega$ is the free-space wave impedance. The sum U_1+U_2 is sensitive to the TEM mode driven by the electric dipole, while the difference U_1–U_2 isolates the magnetic dipole contribution.

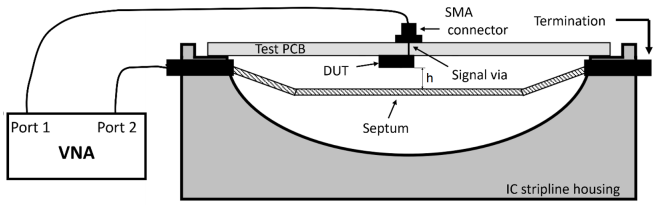

Fig. 1: Cross-sectional view of the TEM cell connected to a VNA. The parameter h is the distance from the septum to the DUT.

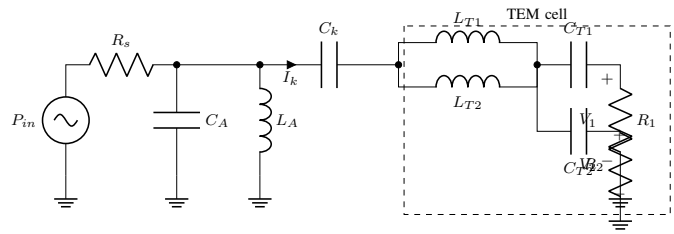

Fig. 2: Extended EQC for the monopole antenna. Mutual inductances vanish ($M = 0$); coupling is purely capacitive via $C_k \approx 1.68$ pF.

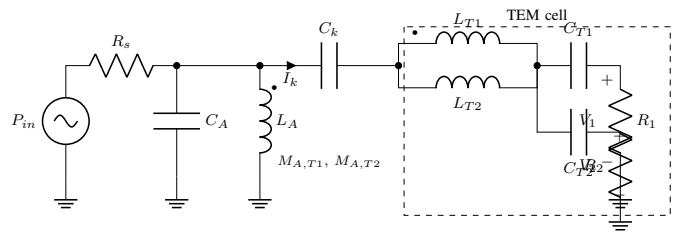

Fig. 3: Extended EQC for the gapped-loop antenna. Both C_k (electric) and $M_{A,T1/2}$ (magnetic) coupling paths are active. $C_A = 38.2$ fF, $L_A = 2.14$ nH.

III. Equivalent Circuit Models and Results

A. Antenna Model and Parameter Extraction

Because both test structures are electrically short, their impedance behaviour can be captured by a reduced RLC circuit. For the *monopole* antenna the dominant reactive element at low frequencies is the capacitance C_A, representing the energy stored in the electric near field [6]; L_A accounts for the stored magnetic energy and R_A for radiation losses. For the *gapped-loop* antenna the same topology applies but with predominantly inductive character [7]; ohmic loss and internal inductance are neglected by modelling the antenna as a perfect electric conductor.

The parameters L_A and C_A are extracted from free-space FEM simulations via the stored-energy relations

$$L_A = \frac{2W_m}{I_{L_A}^2}, \qquad C_A = \frac{2W_c}{V_{C_A}^2}, \tag{3}$$

where W_m (W_c) is the magnetic (electric) stored energy. This gives $C_A = 98.4$ fF, $L_A = 1.14$ nH for the monopole and $C_A = 38.2$ fF, $L_A = 2.14$ nH for the gapped loop.

B. Extended Circuit Including TEM Cell Coupling

The antenna EQC is extended to include the TEM cell, modelled by a symmetric inductance $L_T = L_{T1} + L_{T2}$ and capacitance $C_T = C_{T1} + C_{T2}$. Two coupling elements complete the model: (i) a coupling capacitance C_k that injects displacement current from the antenna into the TEM cell, driving m_e; and (ii) mutual inductances $M_{A,T1}$ and $M_{A,T2}$ between L_A and the septum inductances L_{T1}, L_{T2}, driving m_m via inductive voltage injection. Figs. 2 and 3 show the resulting circuits for the monopole ($M \approx 0$, $C_k \approx 1.68$ pF) and the gapped-loop (both C_k and M non-negligible), respectively.

C. Dipole Moment Extraction from the EQC

The output voltages at R_1 and R_2 are decomposed by superposition into a magnetic part $V'_{1,2}$ (driven by M) and an electric part $V''_{1,2}$ (driven by C_k):

$$V'_{1,2} = \pm j\omega M I_{L_A} \frac{R_{1,2} \| \frac{1}{j\omega C_{T1,2}}}{R_{1,2} \| \frac{1}{j\omega C_{T1,2}} + j\omega L_{T1,2}}, \tag{4a}$$

$$V''_{1,2} = \frac{I_k}{2} \frac{1/R_{1,2}}{1/R_{1,2} + j\omega C_{T1,2}}. \tag{4b}$$

The total output is $V_{1,2} = V'_{1,2} + V''_{1,2}$. The modal wave amplitudes $a_{\mathrm{TEM}} = \sqrt{V_1^2/R_1}$ and $b_{\mathrm{TEM}} = \sqrt{V_2^2/R_2}$ are then inserted into (1)–(2) to obtain the EQC dipole moments. The *phase difference* between m_e and m_m is the primary indicator for the relative balance of the two coupling mechanisms.

D. Results: FEM vs. EQC Comparison

Fig. 4 shows the gapped-loop test structure. The small air gap produces a pronounced electric dipole moment in addition to the magnetic dipole from the current loop. Fig. 5 shows the dipole moments obtained from full-wave TEM cell FEM simulations. The electric dipole moment rises linearly with frequency—a signature absent in a closed loop— while the magnetic dipole moment is roughly constant over the investigated range.

The EQC reproduces the linear rise of m_e and the magnitude of m_m in the upper portion of the frequency range. Deviations at low frequencies are attributed to numerical sensitivities in the FEM energy extraction at small field amplitudes, where the extracted L_A and C_A are most sensitive to meshing errors. For the monopole, only m_e is predicted ($M = 0$) and the EQC result agrees well with the FEM reference across the full frequency range.

IV. Conclusion

Lumped-element equivalent circuit models have been developed for the capacitive and inductive near-field coupling of electrically short antennas to a TEM cell. The EQC parameters (C_A, L_A, C_k, $M_{A,T}$) are extracted from free-space FEM energy integrals and are therefore independent of the TEM cell geometry. Dipole moments predicted by the EQC agree well with full-wave FEM results for both a monopole (pure

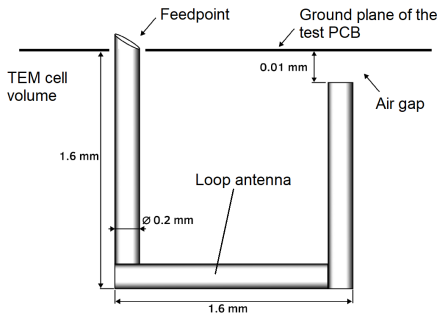

Fig. 4: Gapped rectangular loop test structure. The current loop produces $\mathbf{m}_m$; the air gap adds $\mathbf{m}_e$.

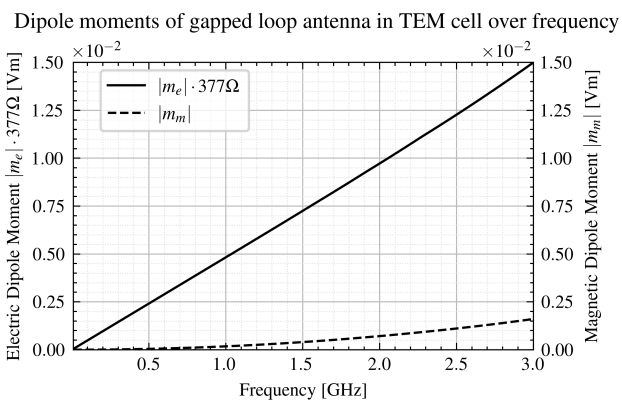

Fig. 5: Electric and magnetic dipole moments of the gapped-loop antenna vs. frequency (FEM). m_e is scaled by Z_0 for comparison.

capacitive coupling) and a gapped-loop antenna (combined capacitive and inductive coupling). The phase difference between m_e and m_m directly reveals the balance between the two coupling mechanisms, providing physical insight not accessible from full-wave simulation alone. Future work will apply this methodology to IC bond-wire geometries within the standardized IC stripline test [4].

References

[1] B. Conley et al., "Shielding Methods for Gigahertz-Frequency Wideband Analog-Integrated Circuits," *IEEE Trans. Electromagn. Compat.*, vol. 58, no. 4, pp. 1041–1051, 2016.

[2] D. Kreindl, B. Weiss, C. Stockreiter, T. Bauernfeind, M. Kaltenbacher, and M. Faccinelli, "Measurement and Simulation Methodology for Characterizing the Shielding Effectiveness of Coating Materials for Optical Sensors," *2023 Int. Symp. Electromagn. Compat.–EMC Europe*, pp. 1–6, 2023.

[3] T. Ostermann and B. Deutschmann, "TEM-Cell and Surface Scan to Identify the Electromagnetic Emission of Integrated Circuits," *Proc. 13th ACM Great Lakes Symp. VLSI*, pp. 76–79, 2003.

[4] *IEC 61967-8: Integrated Circuits—Measurement of Electromagnetic Emissions—Part 8: IC Stripline Method.* IEC, Geneva, 2013.

[5] A. Boyer and S. Ben Dhia, "Low-Cost Broadband Electronic Coupler for Estimation of Radiated Emission of ICs in TEM Cell," *IEEE Trans. Electromagn. Compat.*, vol. 63, no. 2, pp. 636–639, 2020.

[6] L. J. Chu, "Physical Limitations of Omni-Directional Antennas," *J. Appl. Phys.*, vol. 19, no. 12, pp. 1163–1175, 1948.

[7] C. A. Balanis, *Antenna Theory: Analysis and Design*, 2nd ed., New York: Wiley, 1997, p. 244.

[8] D. M. Pozar, *Microwave Engineering*, 4th ed., New York: Wiley, 2012, p. 175.