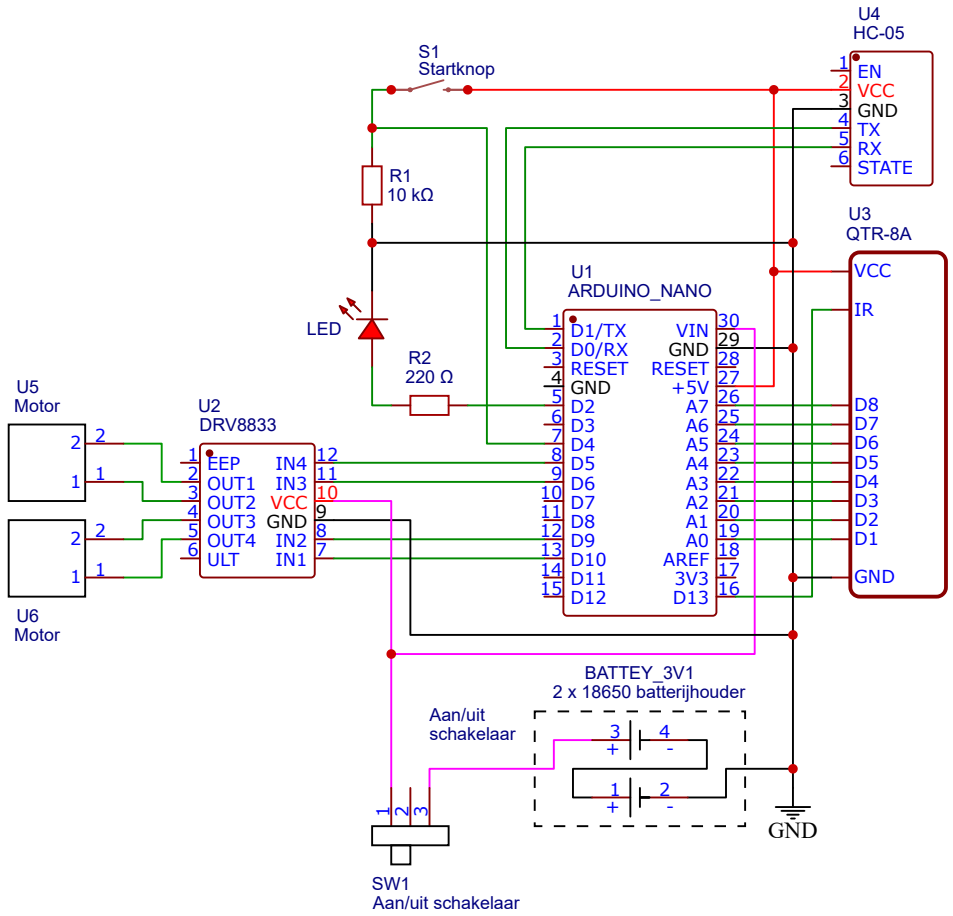

TITLE: Line Following Robot		REV: 1.0
EasyEDA	Company: HOGENT	Sheet: 1/1
	Date: 2023-10-19 Drawn By: Simon Raman	