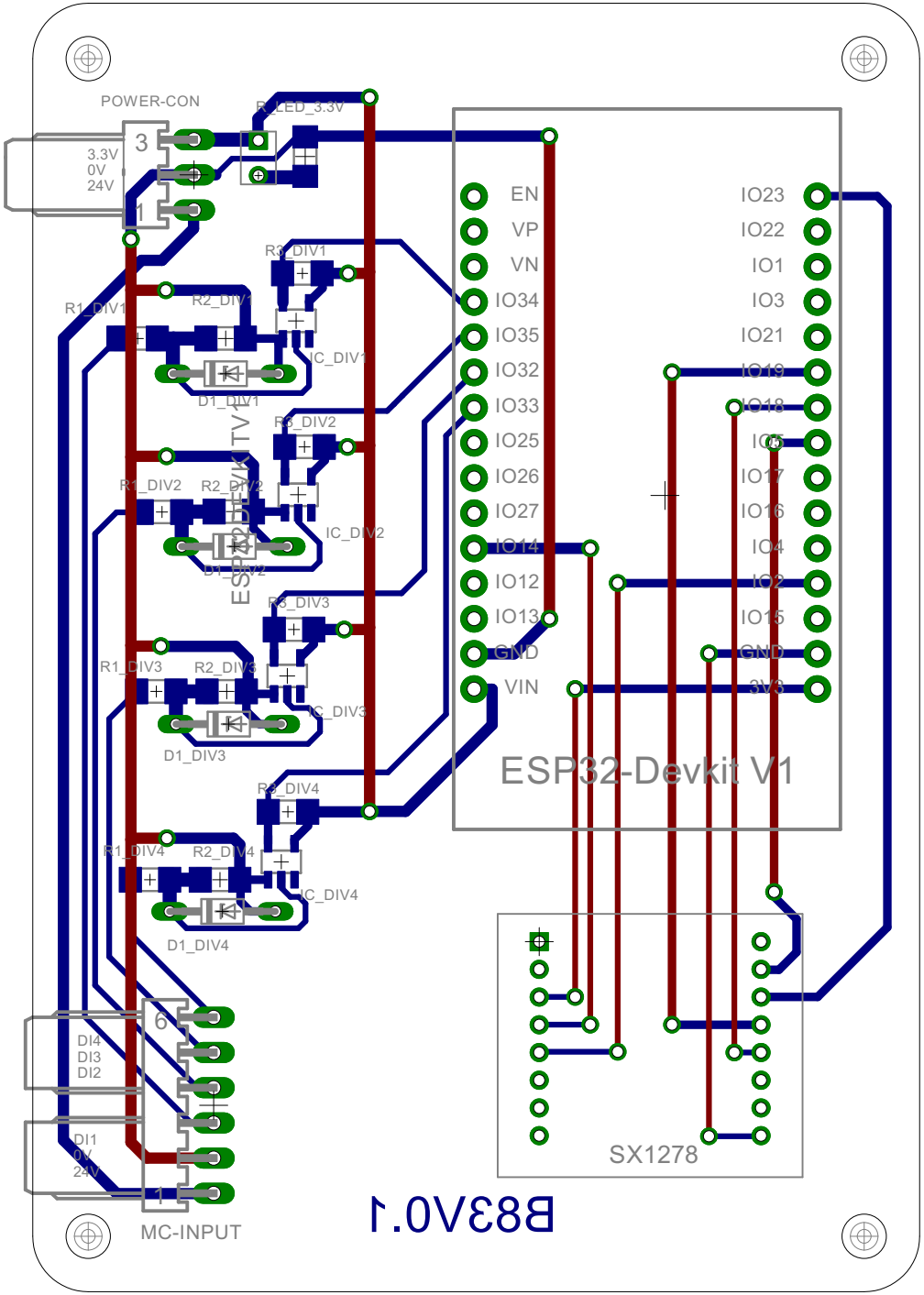

19/5/2023 3:24:49 pm f=2.00 d:\Project\eagle_proj\TowerLight\v0.1\TowerLight.brd