Akuvox | akubela

Flush Mounted Module Models and Connections

Model: R2, EU Standard

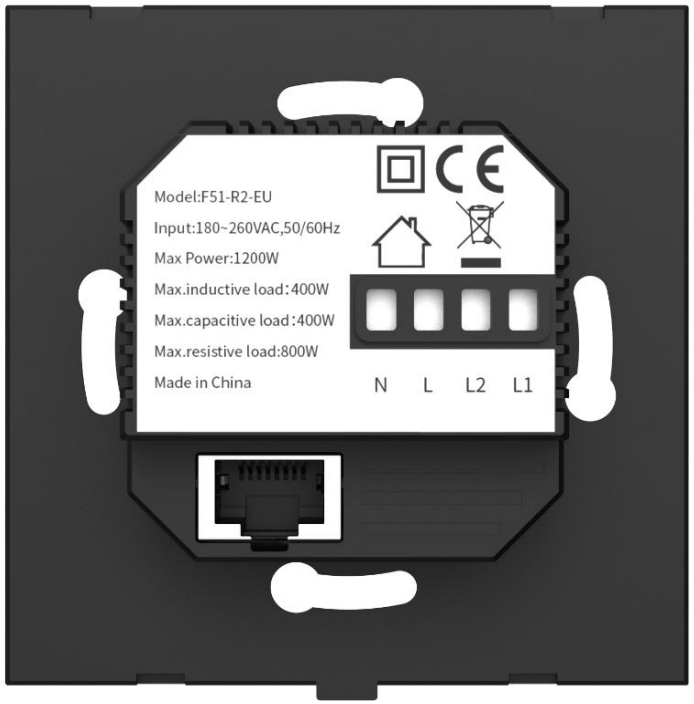

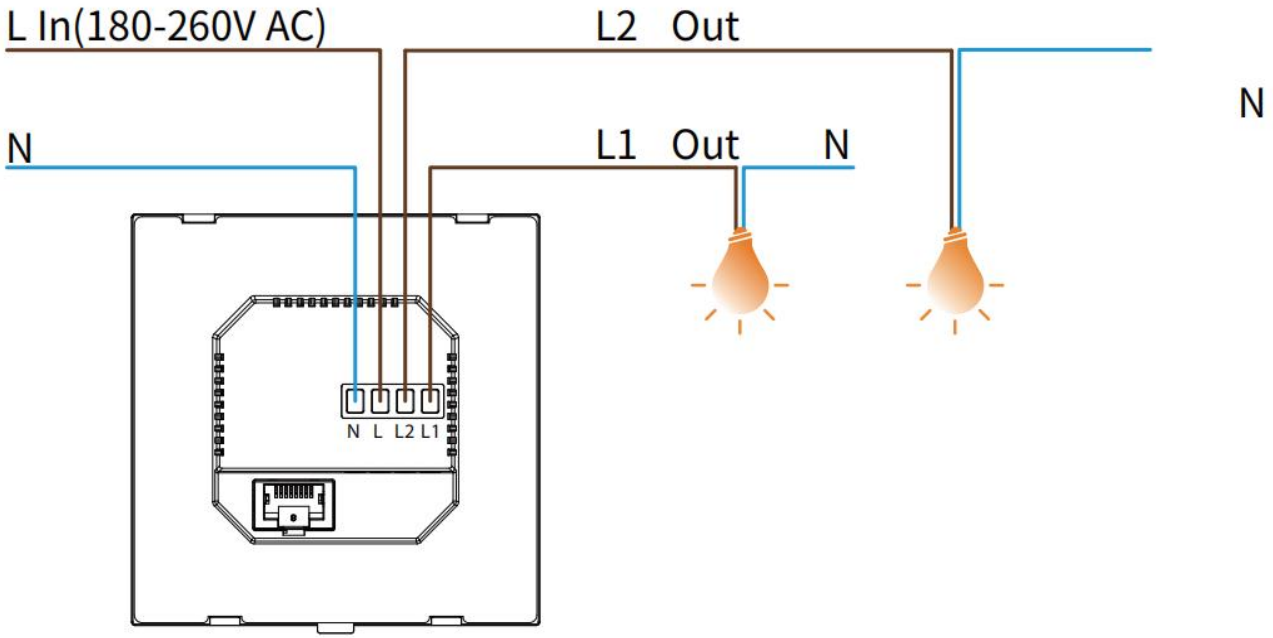

Compatible HyPanel Devices: KS41, KS53, PS51, RT61, PG71, and PG71N

Model: R1, US Standard

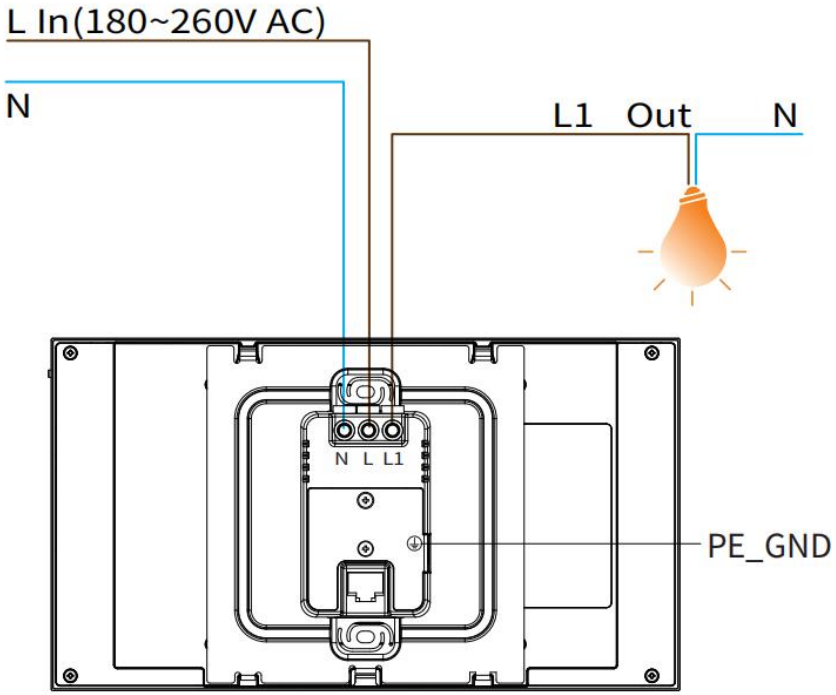

Compatible HyPanel Devices: PS52N, PG71, and PG71N

Model: D1, EU Standard

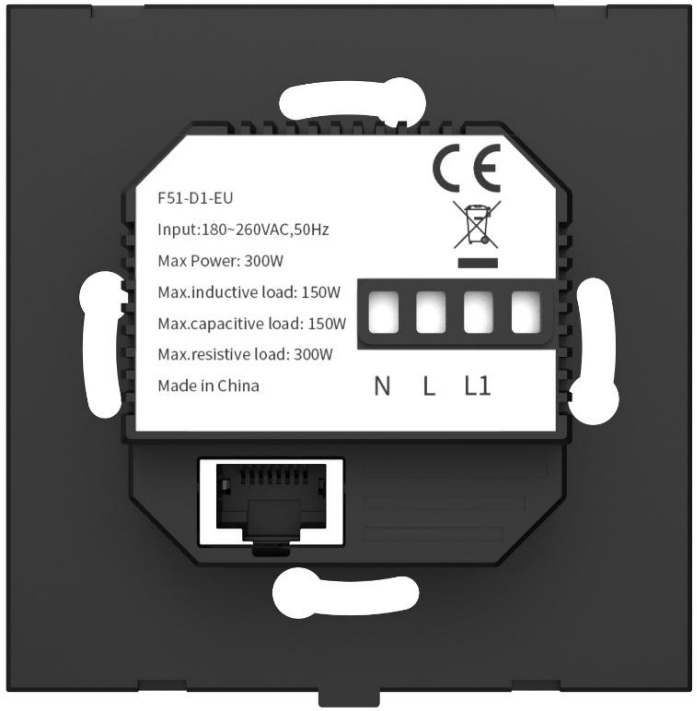

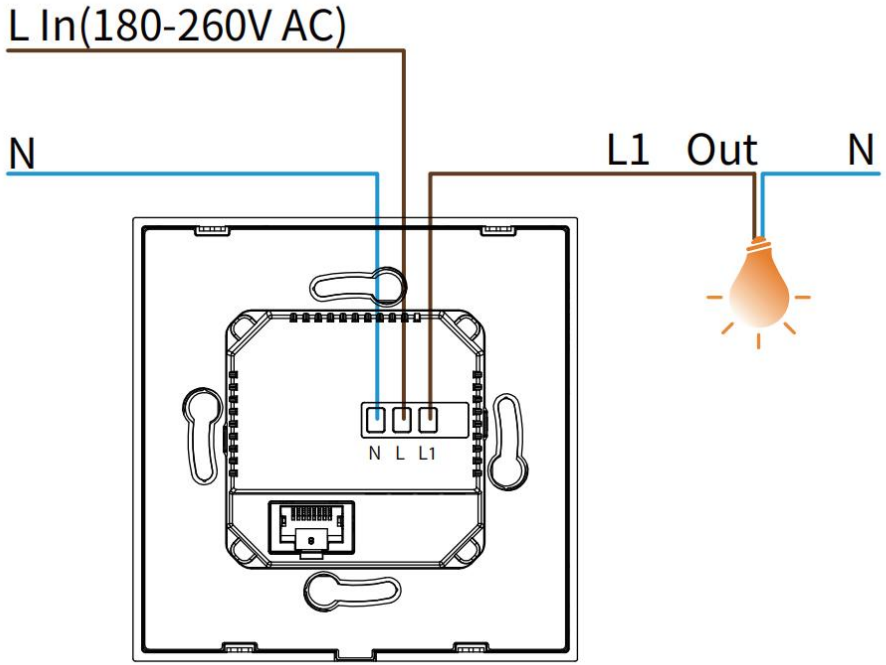

Compatible HyPanel Devices: PS51, and RT61

Model: D1, US Standard

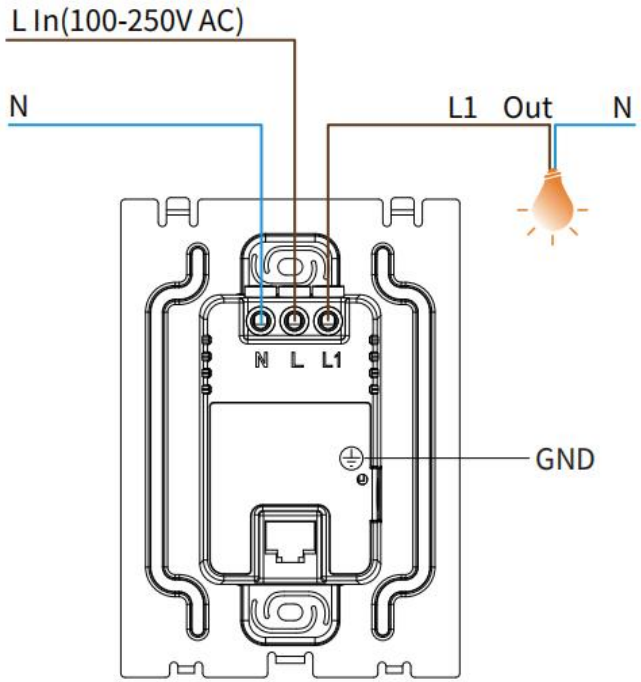

Compatible HyPanel Devices: PS52V2, and RT61

Model: PoE, EU Standard

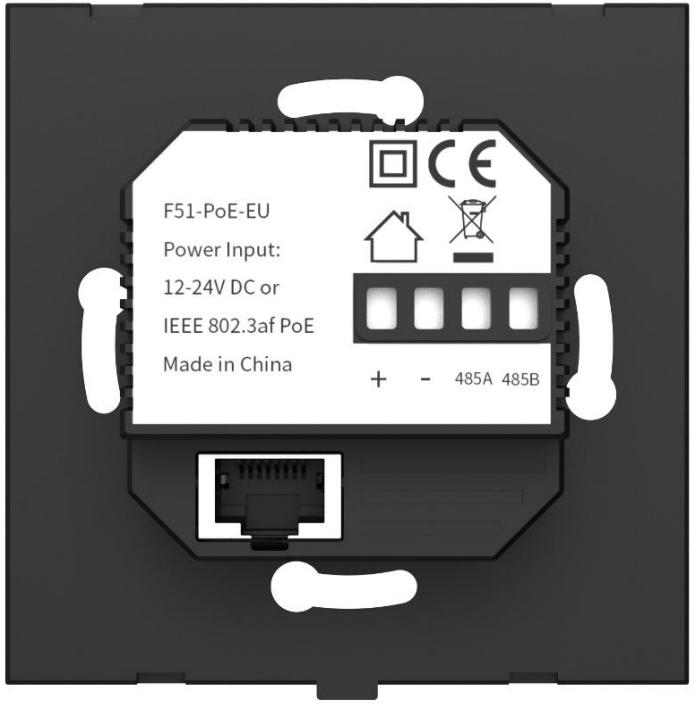

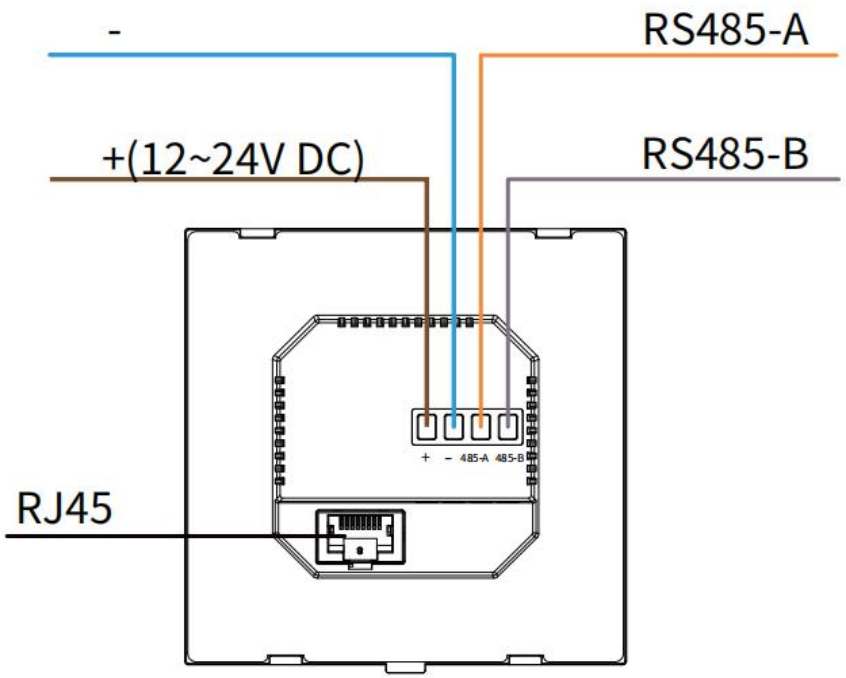

Compatible HyPanel Devices: KS41, PS51, RT61, and PG71

Model: PoE, US Standard

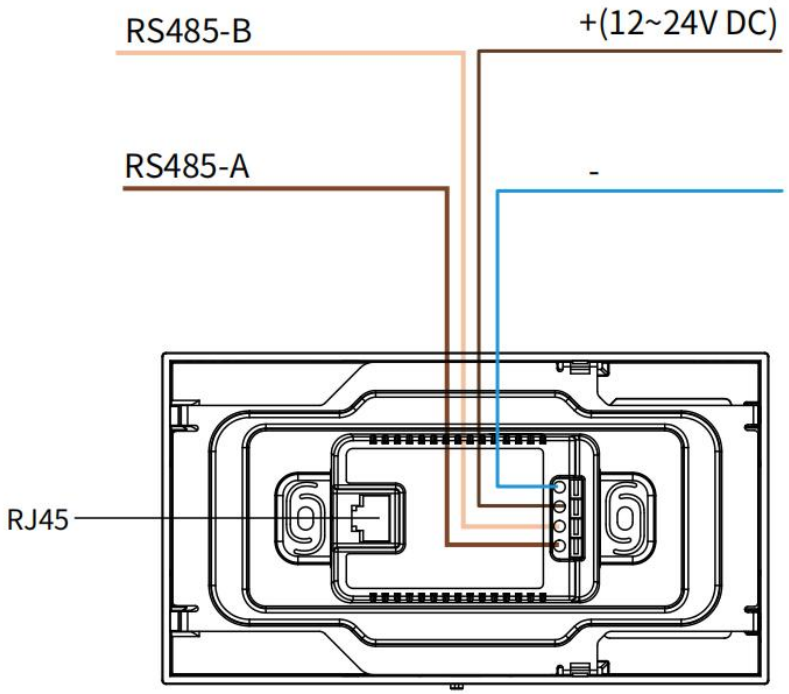

Compatible HyPanel Devices: PS52V2, PS52N, RT61, PG71, and PG71N

Model: FANCOIL, 90~240V, EU Standard

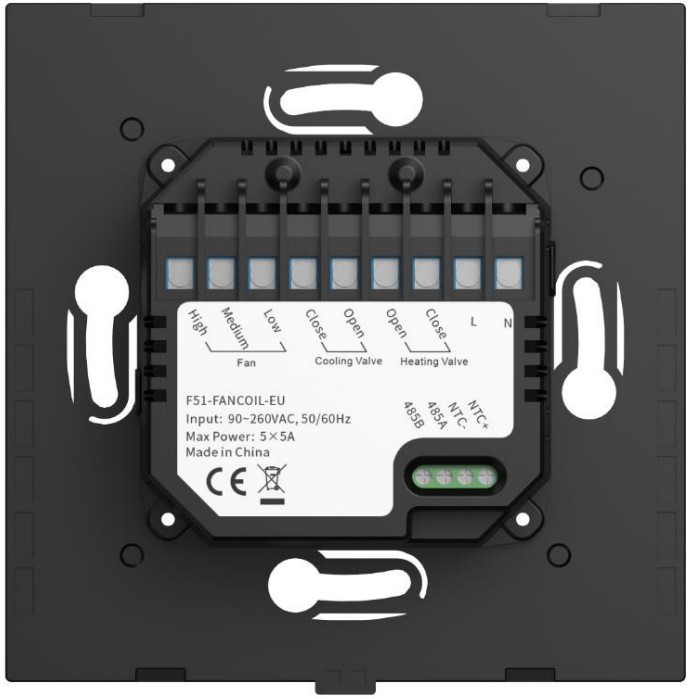

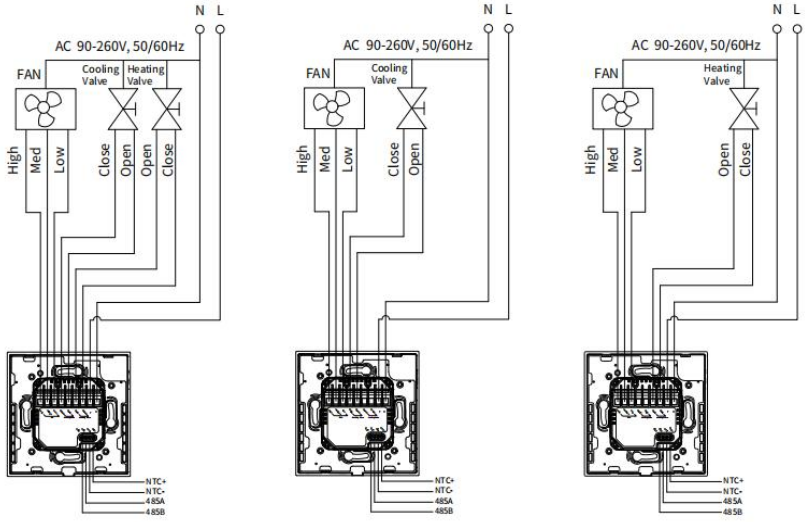

Four Pipe, On/Off

Two Pipe, On/Off

Two Pipe, On/Off

Compatible HyPanel Devices: KS41, and PS51

Model: FANCOIL, 0~10V, EU Standard

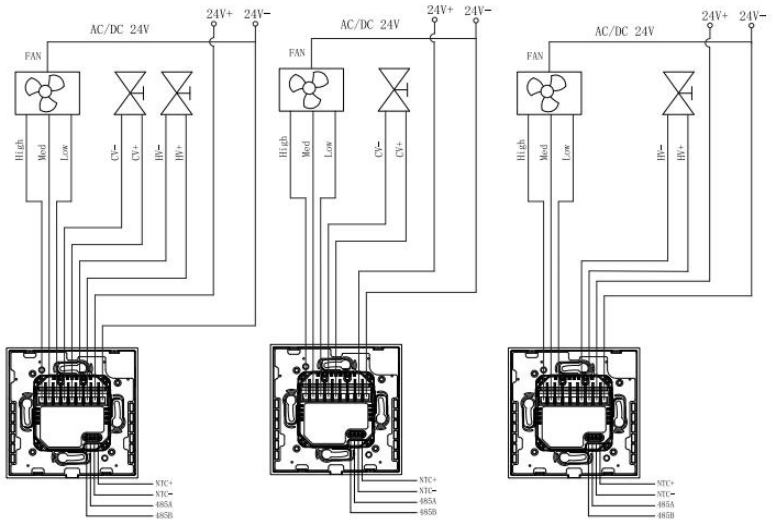

Four Pipe, On/Off

Two Pipe, On/Off

Two Pipe, On/Off

Compatible HyPanel Device: PS51

Model: FANCOIL, 24V, EU Standard

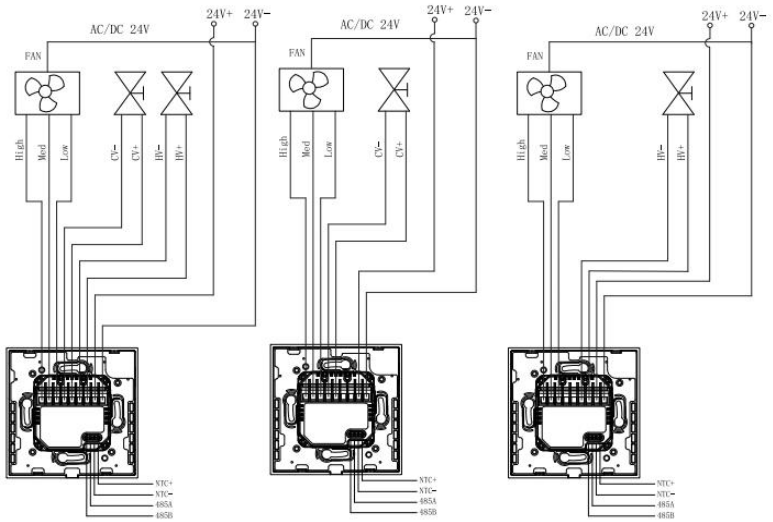

Four Pipe, On/Off

Two Pipe, On/Off

Two Pipe, On/Off

Compatible HyPanel Device: PS51

Model: HEATING, 24V, EU Standard

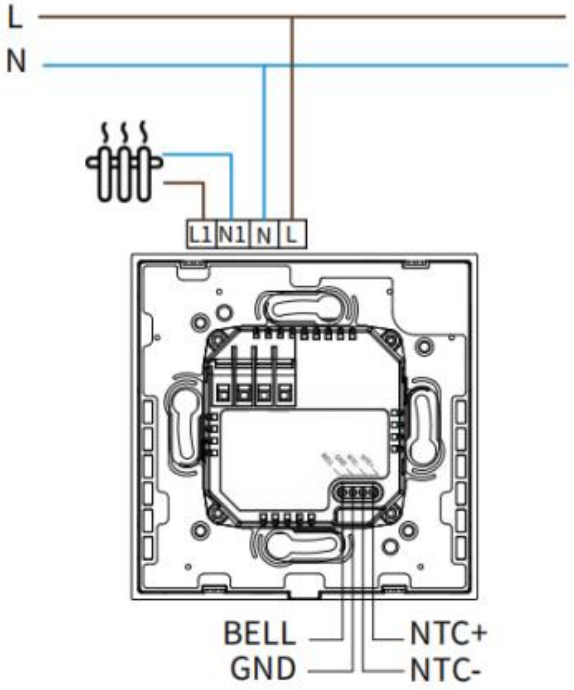

Compatible HyPanel Device: PS51

* Max Load： 16A

Model: KNX, EU Standard

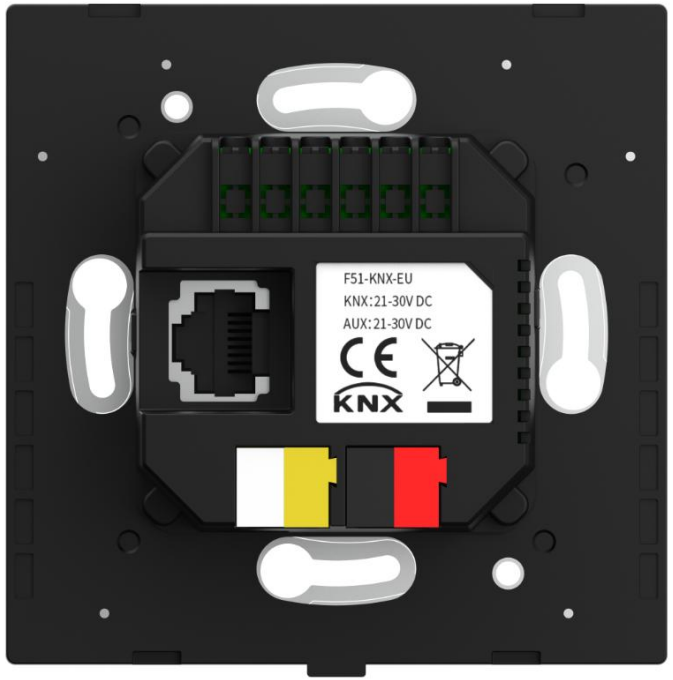

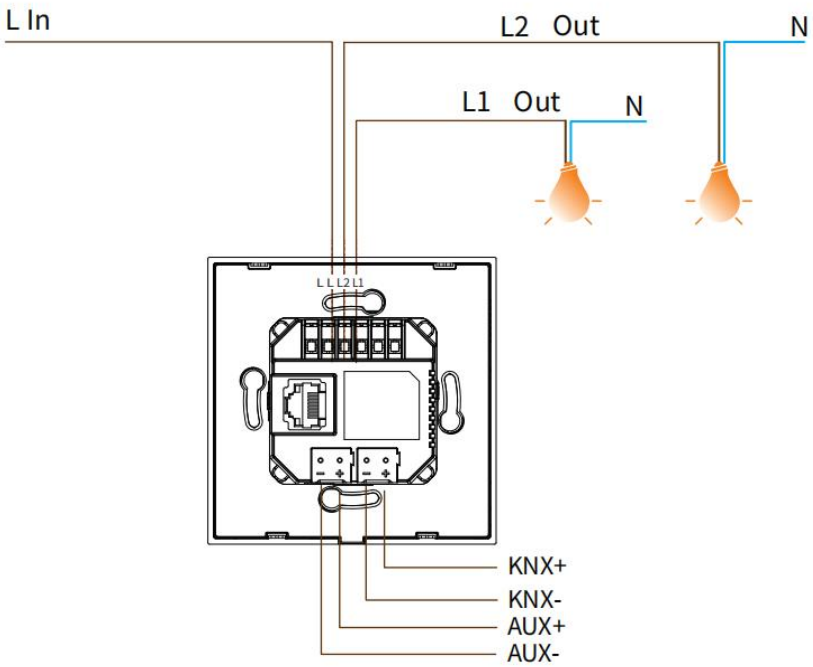

Compatible HyPanel Devices: KS41, PS51, RT61, PG71, PH81, and PHX1

Model: ST

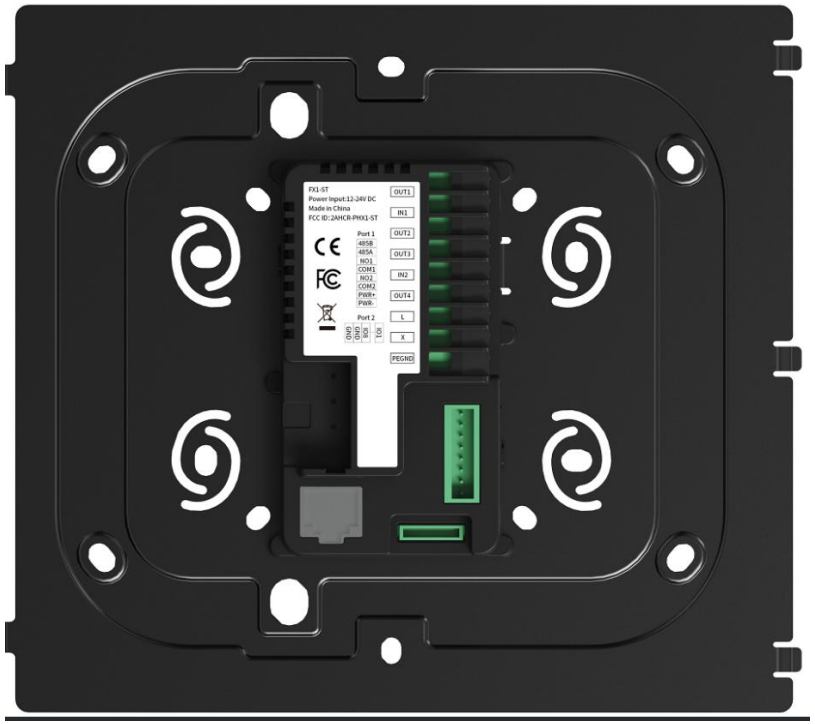

Zone A connections

Sample connection 1: Lights

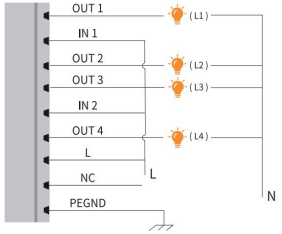

Sample connection 2: Curtain motor and smart valve

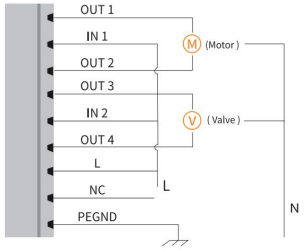

Sample connection 3: Dry contact

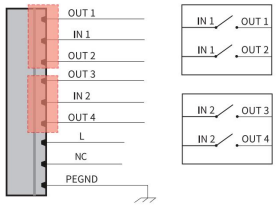

Zone B connections

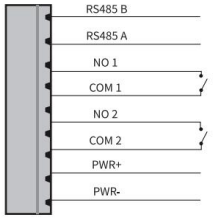

Zone C connections

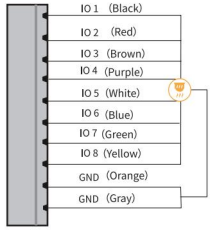

Compatible HyPanel Devices: PH81, and

Chapter Quiz

Quiz and Answer

Quiz

1.[Multiple-Select] Which of the following statements about the interface and power supply of akuebla panels are correct? ( )

A. PoE-EU version flush mounted modules support PoE power supply but do not support 12-24VDC power adapters.

B. The wiring diagram for the 90~240V FANCOIL-EU standard flush mounted module is as follows:

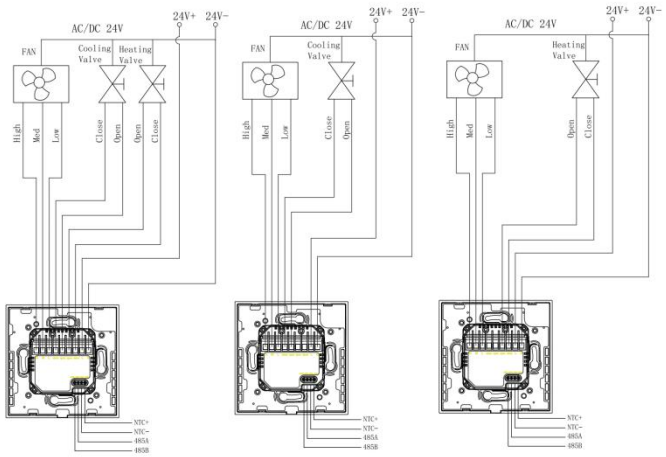

C. R2-EU flush mounted modules can power two lighting devices.

D. The PH81-ST flush mounted module has IO signal input and can be connected to wired sensors.

Quiz

2. [Short Answer] HyPanel (PS51) offers varies flush mounted modules with different capabilities to suit diverse project needs. Please classify the following flush mounted modules according to their applications and explain the classification criteria.

3.[Practice] Wire the PH81-ST flush mounted module.

Tasks:

Connect and communicate with an RS485 switch actuator

Control four high-voltage lights

Connect a weak-voltage relay door

Connect a wired doorbell

Instructions:

If the devices are not available, draw the wiring diagram illustrating the connections.

If devices are available, perform the actual wiring.

4.[Practice] Follow the Quick Guides to install and remove the electrical boxes for the PS51-R2 and PH81-ST panels.

Answer

1.[Multiple-Select] Which of the following statements about the interface and power supply of akubela panels are correct? (CD)

A. PoE-EU version flush mounted modules support PoE power supply but do not support 12-24VDC power adapters.

B. The wiring diagram for the 90~240V FANCOIL-EU standard flush mounted module is as follows:

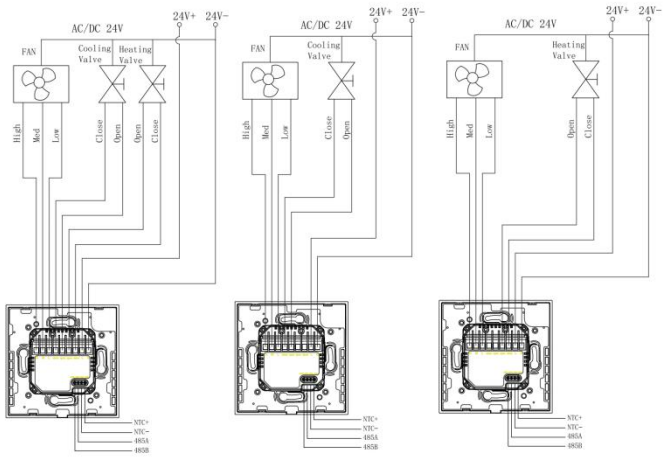

C. R2-EU flush mounted modules can power two lighting devices.

D. The PH81-ST flush mounted module has IO signal input and can be connected to wired sensors.

Answer

2. [Short Answer] HyPanel (PS51) offers varies flush mounted modules with different capabilities to suit diverse project needs. Please classify the following flush mounted modules according to their applications and explain the classification criteria.

Flush mounted modules: R2, PoE, Fancoil series (high voltage, 24V, 0-10V models), Heating.

(1) For projects requiring devices control via the flush mounted module:

① Lighting control：R2

② Temperature control：

1) Fan coil control: Fancoil series(high voltage, 24V, 0-10V models)

2) High-power electric heating equipment control：Heating

③ Communication with RS485 devices: PoE

(2) For projects without actual load requirements, classification is based on power type:

Weak voltage (low power): PoE

High voltage (low power): R2

Answer

3.[Practice] Wire the PH81-ST flush mounted module.

Tasks:

Connect and communicate with an RS485 switch actuator

Control four high-voltage lights

Connect a weak-voltage relay door

Connect a wired doorbell

Instructions:

If the devices are not available, draw the wiring diagram illustrating the connections.

If devices are available, perform the actual wiring.

Wiring Diagram Example：

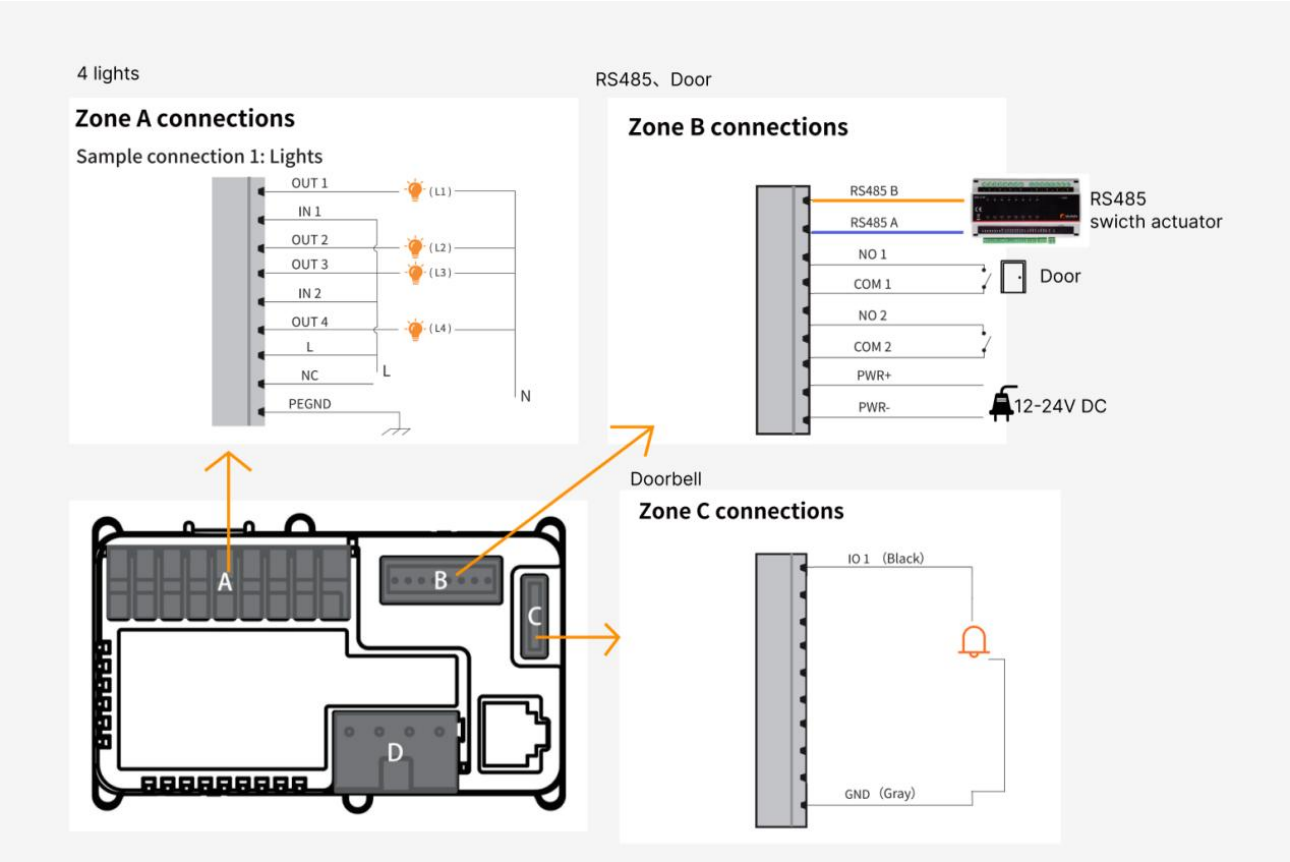

Akuvox | akubela

Well Done!

You've finished this session.

Tel: +86-592-2133061 Ext: 7694 Fax: +86-592-2133061
Email: sales@akuvox.com support@akuvox.com
Web: www.akuvox.com