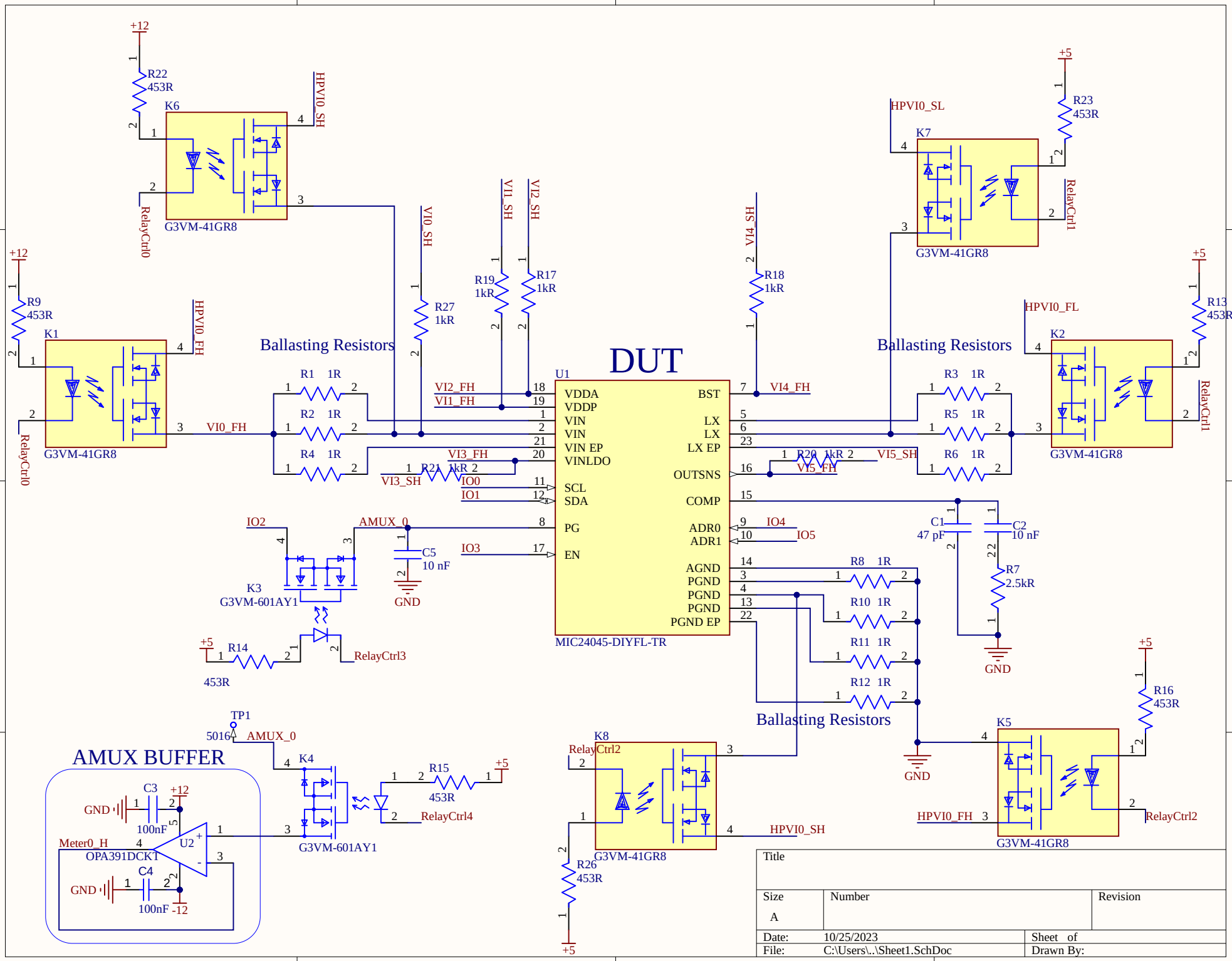
DUT
U1
MIC24045-DIYFL-TR
VDDA
VDDP
VIN
VIN
VIN EP
VINLDO
SCL
SDA
PG
EN
BST
LX
LX
LX EP
OUTSNS
COMP
ADR0
ADR1
AGND
PGND
PGND
PGND
PGND EP
Ballasting Resistors
Ballasting Resistors
Ballasting Resistors
AMUX BUFFER
K1
K2
K3
K4
K5
K6
K7
K8
G3VM-41GR8
G3VM-601AY1
OPA391DCKT
U2
TP1
5016
HPVI0_SH
HPVI0_FH
HPVI0_SL
HPVI0_FL
RelayCtrl0
RelayCtrl1
RelayCtrl2
RelayCtrl3
RelayCtrl4
VI0_FH
VI1_FH
VI2_FH
VI3_FH
VI3_SH
VI4_FH
VI5_FH
VI5_SH
VI0_SH
VI1_SH
VI2_SH
VI4_SH
IO0
IO1
IO2
IO3
IO4
IO5
AMUX_0
Meter0_H
GND
+12
-12
+5
R1 1R
R2 1R
R3 1R
R4 1R
R5 1R
R6 1R
R7 2.5kR
R8 1R
R9 453R
R10 1R
R11 1R
R12 1R
R13 453R
R14 453R
R15 453R
R16 453R
R17 1kR
R18 1kR
R19 1kR
R20 1kR
R21 1kR
R22 453R
R23 453R
R26 453R
R27 1kR
C1 47 pF
C2 10 nF
C3 100nF
C4 100nF
C5 10 nF
Title
Size
A
Number
Revision
Date: 10/25/2023
Sheet of
File: C:\Users\..\Sheet1.SchDoc
Drawn By:

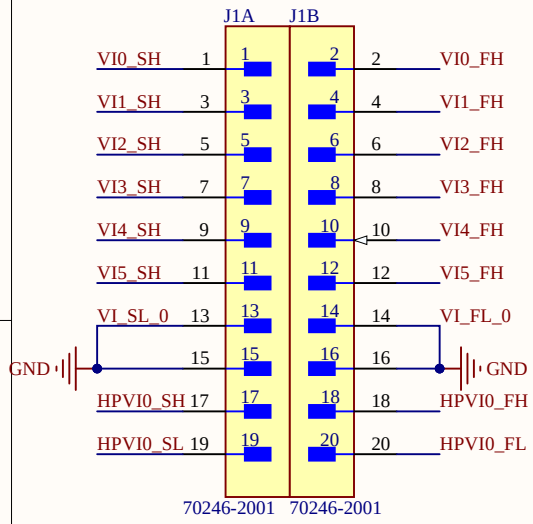

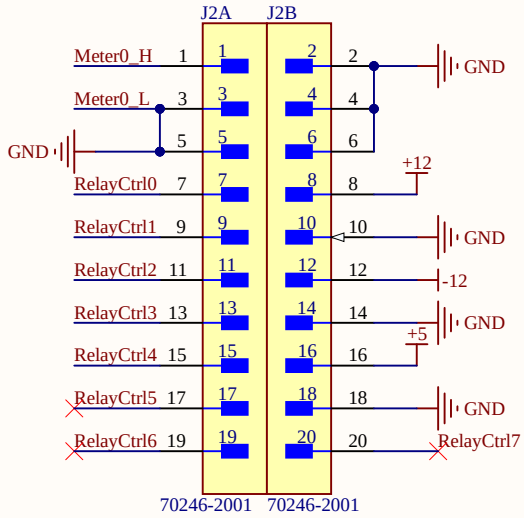

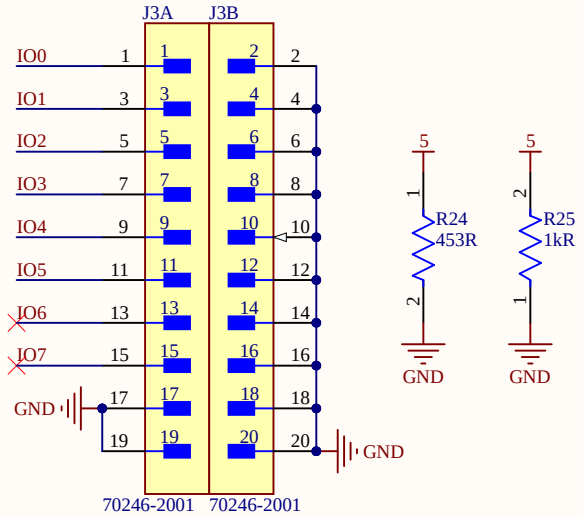

Functional Block Diagram

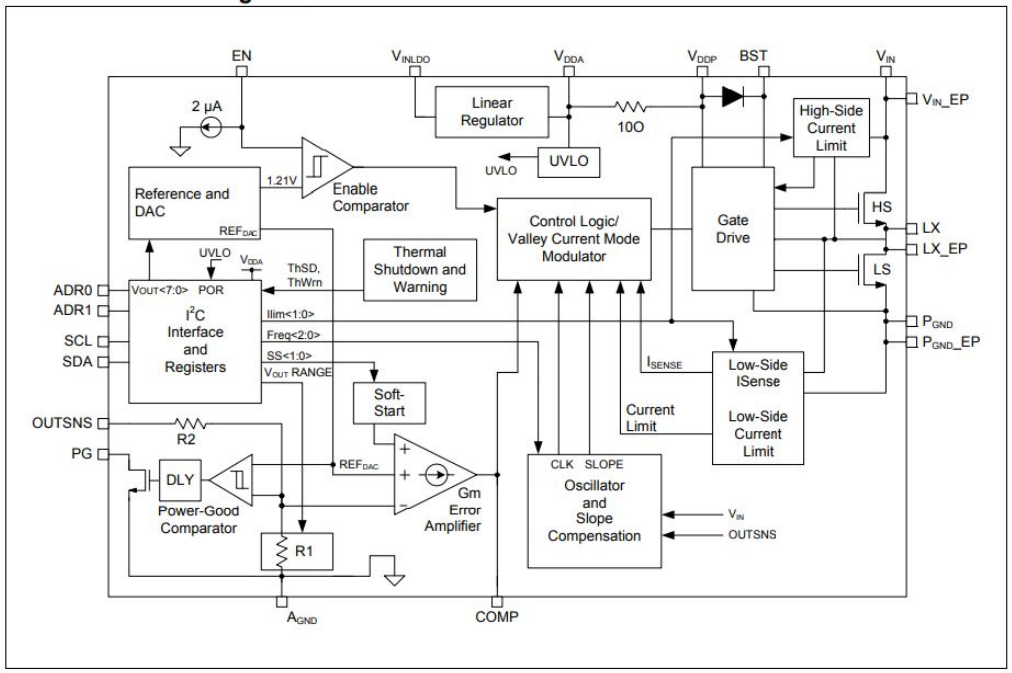

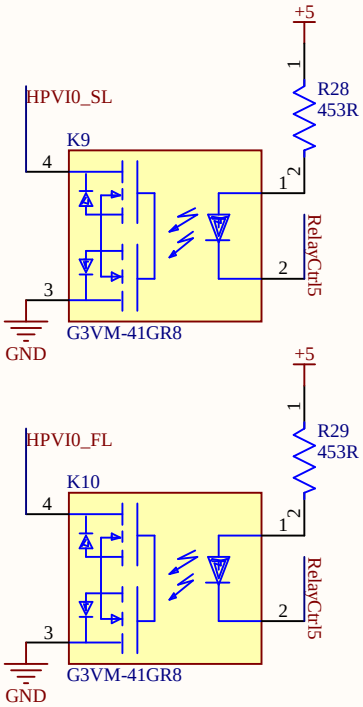

Title		
Size A	Number	Revision
Date: 10/25/2023		Sheet of
File: C:\Users\..\Sheet2.SchDoc		Drawn By: