MCU ATmega328P

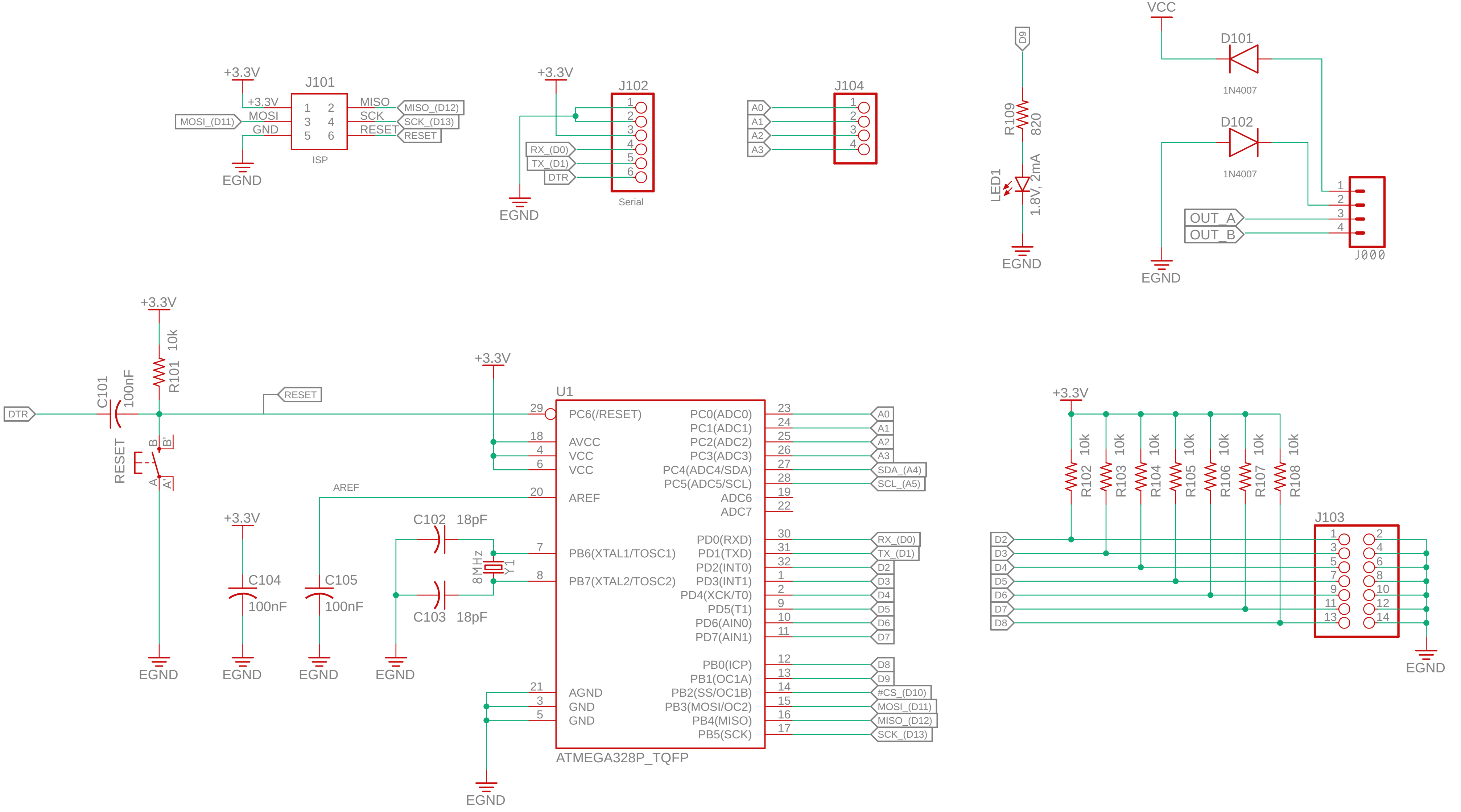
+3.3V
J101
+3.3V
MOSI
GND
MISO
SCK
RESET
MOSI_(D11)
MISO_(D12)
SCK_(D13)
RESET
ISP
EGND
J102
RX_(D0)
TX_(D1)
DTR
Serial
J104
A0
A1
A2
A3
D9
R109
820
LED1
1.8V, 2mA
VCC
D101
1N4007
D102
1N4007
OUT_A
OUT_B
J000
DTR
C101
100nF
R101
10k
RESET
A
A'
B
B'
U1
PC6(/RESET)
AVCC
VCC
VCC
AREF
PB6(XTAL1/TOSC1)
PB7(XTAL2/TOSC2)
AGND
GND
GND
PC0(ADC0)
PC1(ADC1)
PC2(ADC2)
PC3(ADC3)
PC4(ADC4/SDA)
PC5(ADC5/SCL)
ADC6
ADC7
PD0(RXD)
PD1(TXD)
PD2(INT0)
PD3(INT1)
PD4(XCK/T0)
PD5(T1)
PD6(AIN0)
PD7(AIN1)
PB0(ICP)
PB1(OC1A)
PB2(SS/OC1B)
PB3(MOSI/OC2)
PB4(MISO)
PB5(SCK)
ATMEGA328P_TQFP
SDA_(A4)
SCL_(A5)
D2
D3
D4
D5
D6
D7
D8
#CS_(D10)
C102 18pF
C103 18pF
8 MHz
Y1
C104
100nF
C105
100nF
AREF
R102 10k
R103 10k
R104 10k
R105 10k
R106 10k
R107 10k
R108 10k
J103
EGND

24V / 12V / 3.3V

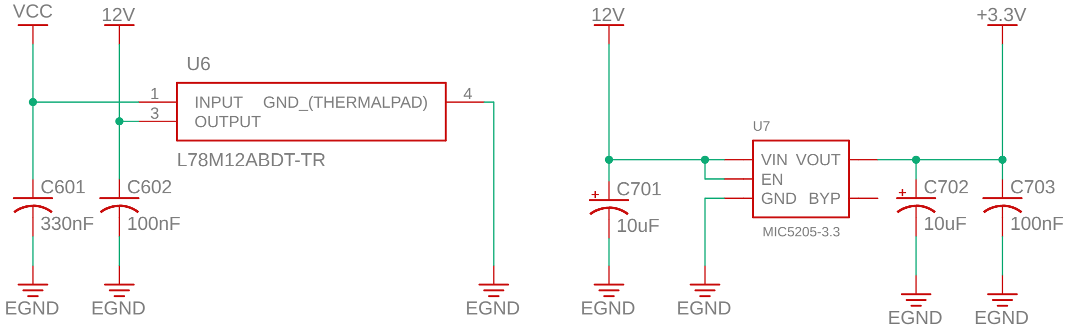
VCC
12V
U6
1
3
INPUT GND_(THERMALPAD)
OUTPUT
4
L78M12ABDT-TR
C601
330nF
C602
100nF
EGND
EGND
EGND
12V
+3.3V
U7
VIN VOUT
EN
GND BYP
MIC5205-3.3
C701
10uF
C702
10uF
C703
100nF
EGND
EGND
EGND
EGND

Dual OP AMP LM358B

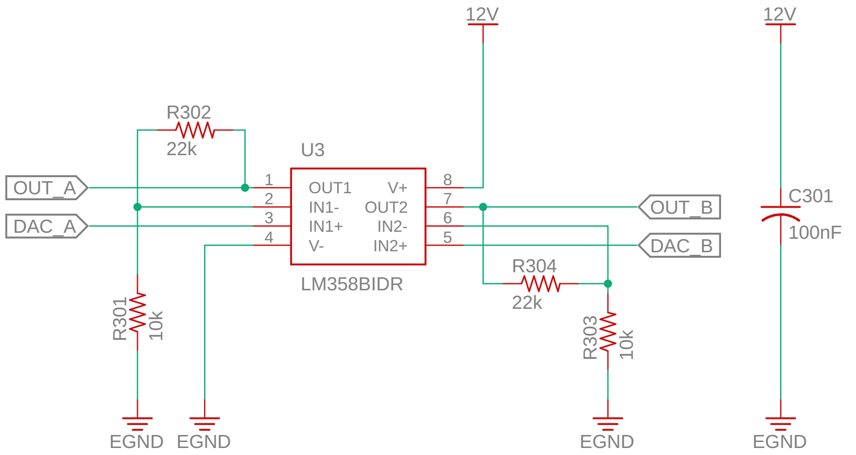
R302
22k
U3
12V
12V
OUT_A
DAC_A
1
2
3
4
OUT1
IN1-
IN1+
V-
V+
OUT2
IN2-
IN2+
8
7
6
5
LM358BIDR
OUT_B
DAC_B
C301
100nF
R304
22k
R301
10k
R303
10k
EGND
EGND
EGND
EGND

Sensor HB1750 and BME280

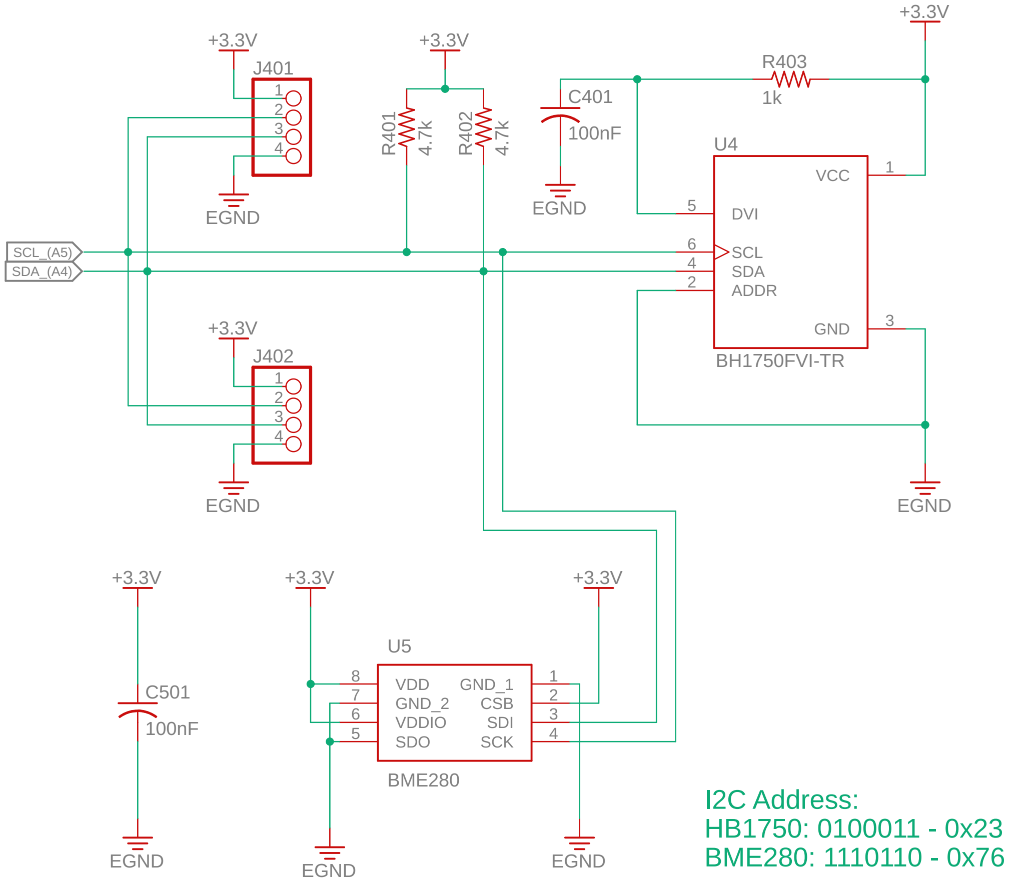
+3.3V
+3.3V
+3.3V
J401
1
2
3
4
R401
4.7k
R402
4.7k
C401
100nF
R403
1k
EGND
EGND
U4
VCC
1
5
DVI
6
SCL
4
SDA
2
ADDR
GND
3
BH1750FVI-TR
SCL_(A5)
SDA_(A4)
+3.3V
J402
1
2
3
4
EGND
EGND
+3.3V
+3.3V
+3.3V
C501
100nF
U5
8
7
6
5
VDD
GND_2
VDDIO
SDO
GND_1
CSB
SDI
SCK
1
2
3
4
BME280
EGND
EGND
EGND

I2C Address:
HB1750: 0100011 - 0x23
BME280: 1110110 - 0x76

12bit DAC MCP4922

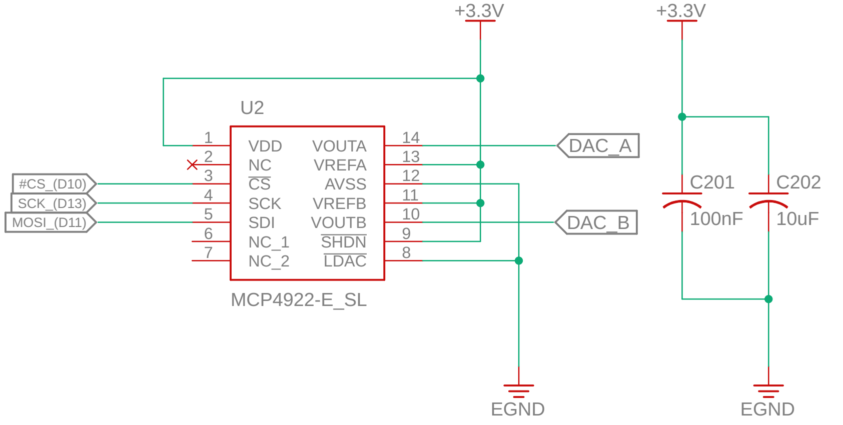
+3.3V
+3.3V
U2
1
2
3
4
5
6
7
VDD
NC
CS
SCK
SDI
NC_1
NC_2
VOUTA
VREFA
AVSS
VREFB
VOUTB
SHDN
LDAC
14
13
12
11
10
9
8
#CS_(D10)
SCK_(D13)
MOSI_(D11)
DAC_A
DAC_B
C201
100nF
C202
10uF
MCP4922-E_SL
EGND
EGND