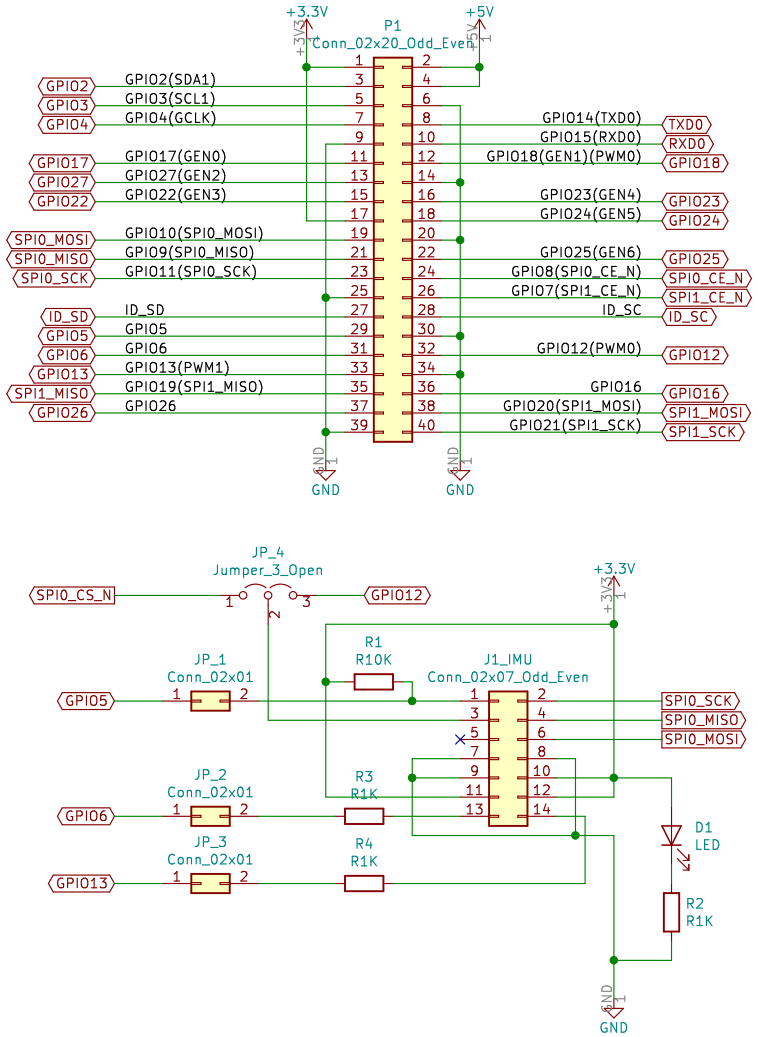


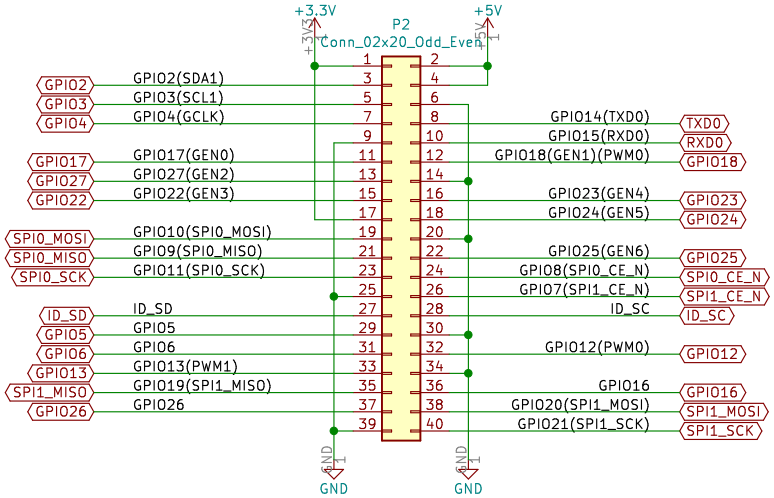


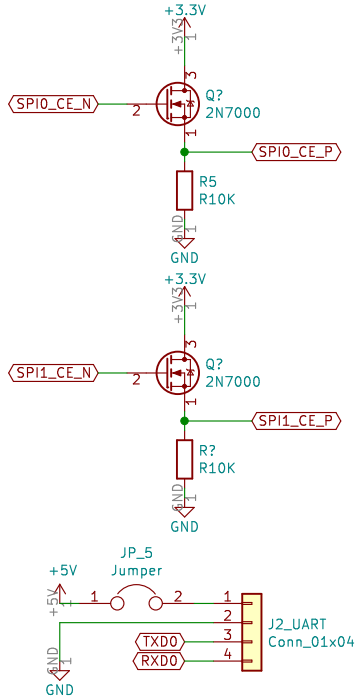


ID_SD and ID_SC PINS:
These pins are reserved for HAT ID EEPROM.

At boot time this I2C interface will be interrogated to look for an EEPROM that identifies the attached board and allows automagic setup of the GPIOs (and optionally, Linux drivers).

DO NOT USE these pins for anything other than attaching an I2C ID EEPROM. Leave unconnected if ID EEPROM not required.

Mounting Holes

MK1 M2.5
MK2 M2.5
MK3 M2.5
MK4 M2.5

Sheet: /
File: rpi_sield_001.sch

**Title:**

| | | |
|---|---|---|
| Size: A4 | Date: 15 nov 2012 | Rev: |
| KiCad E.D.A. kicad (5.0.2)-1 | | Id: 1/1 |