SCHEMATICS

AND

ILLUSTRATIONS

AX300 SERIES PROCESSOR

AX300 SE

AX390 SE

MAMMO 300

AX300 SERIES SCHEMATIC

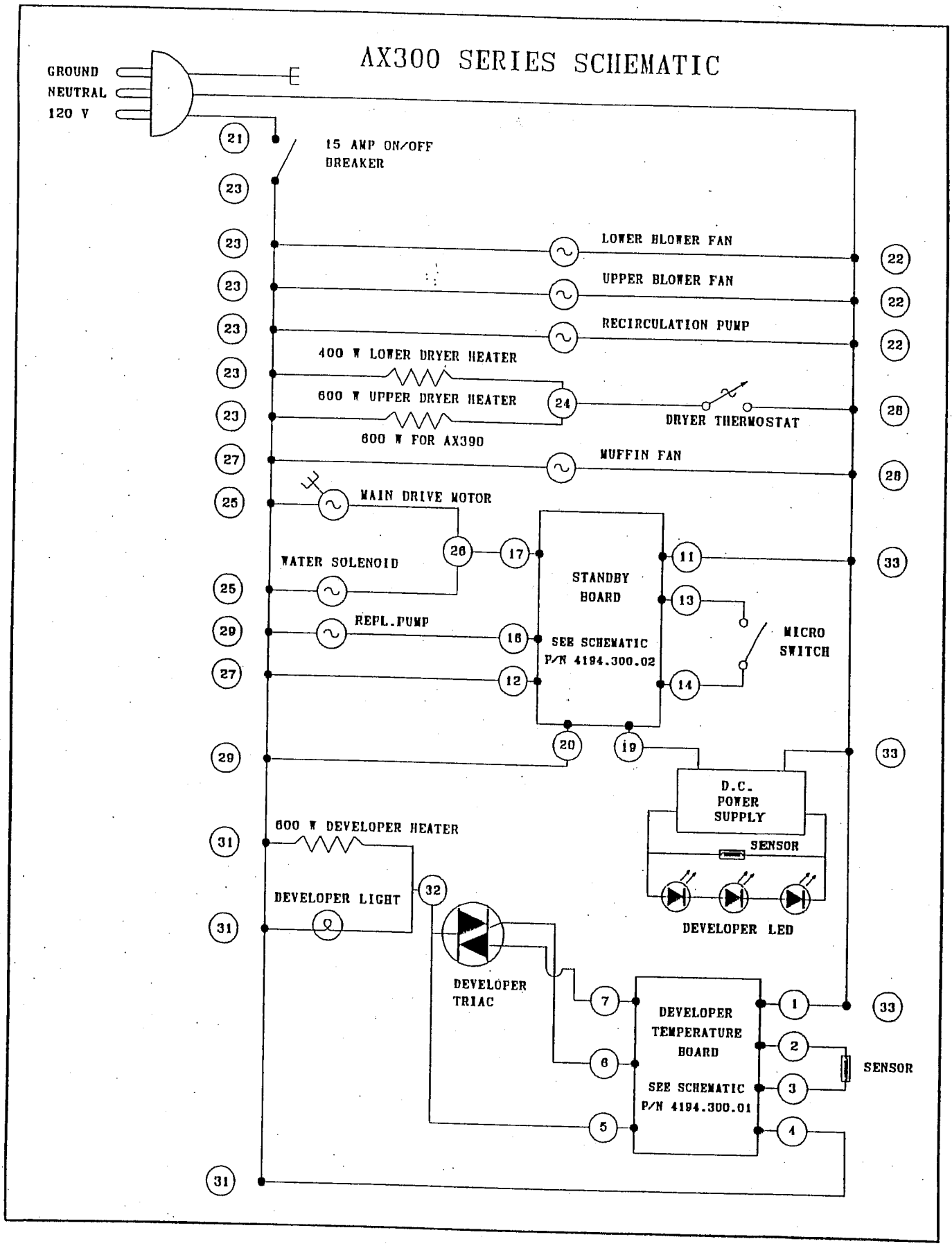

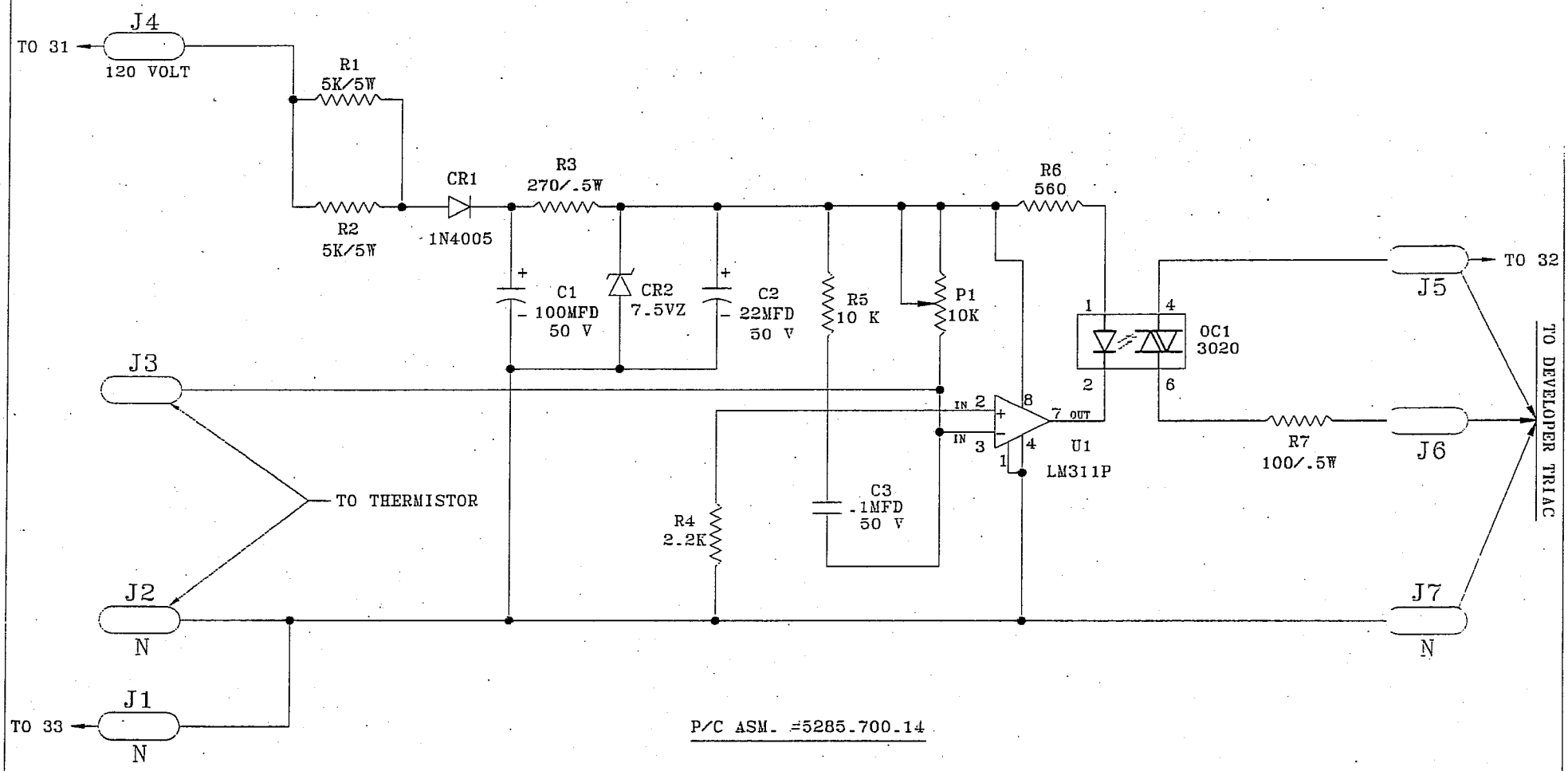

P/C ASM. #5285.700.14

REV	DATE CODE	DRG	APP
00	9448	NKS	PK
01	0315	WJF	

DEVELOPER TEMP. P/C SCHEMATIC

PART NUMBER: 4194.300.01

FOR USE IN : AX300 SERIES
AX350 SERIES
AX700 SERIES

ALPHATEK CORPORATION

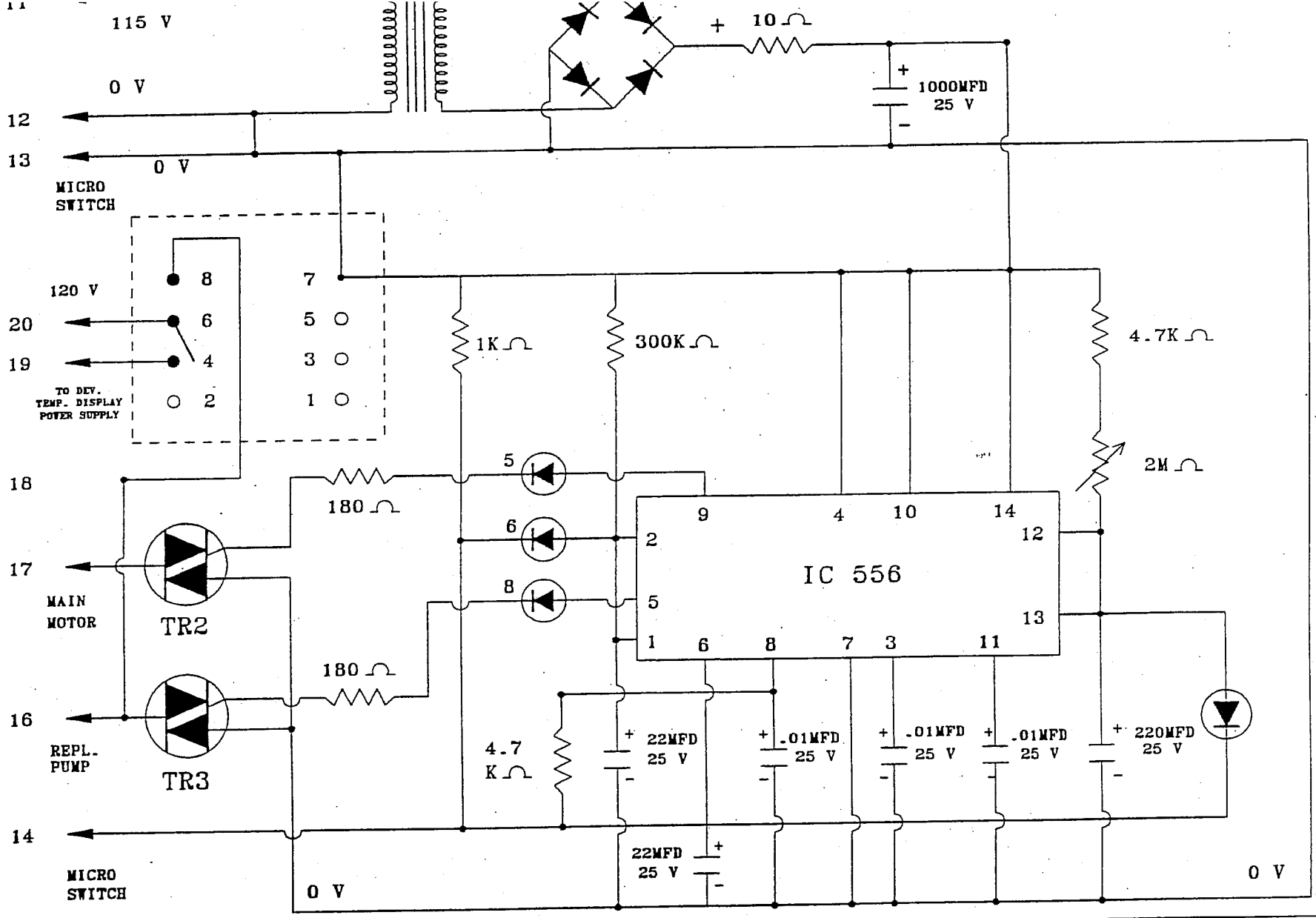

AX300 SERIES STANDBY P/C SCHEMATIC	PART NUMBER : 4194.300.02
DRWG:ORIG 9186 REV#2 9486	ALPHATEK CORPORATION

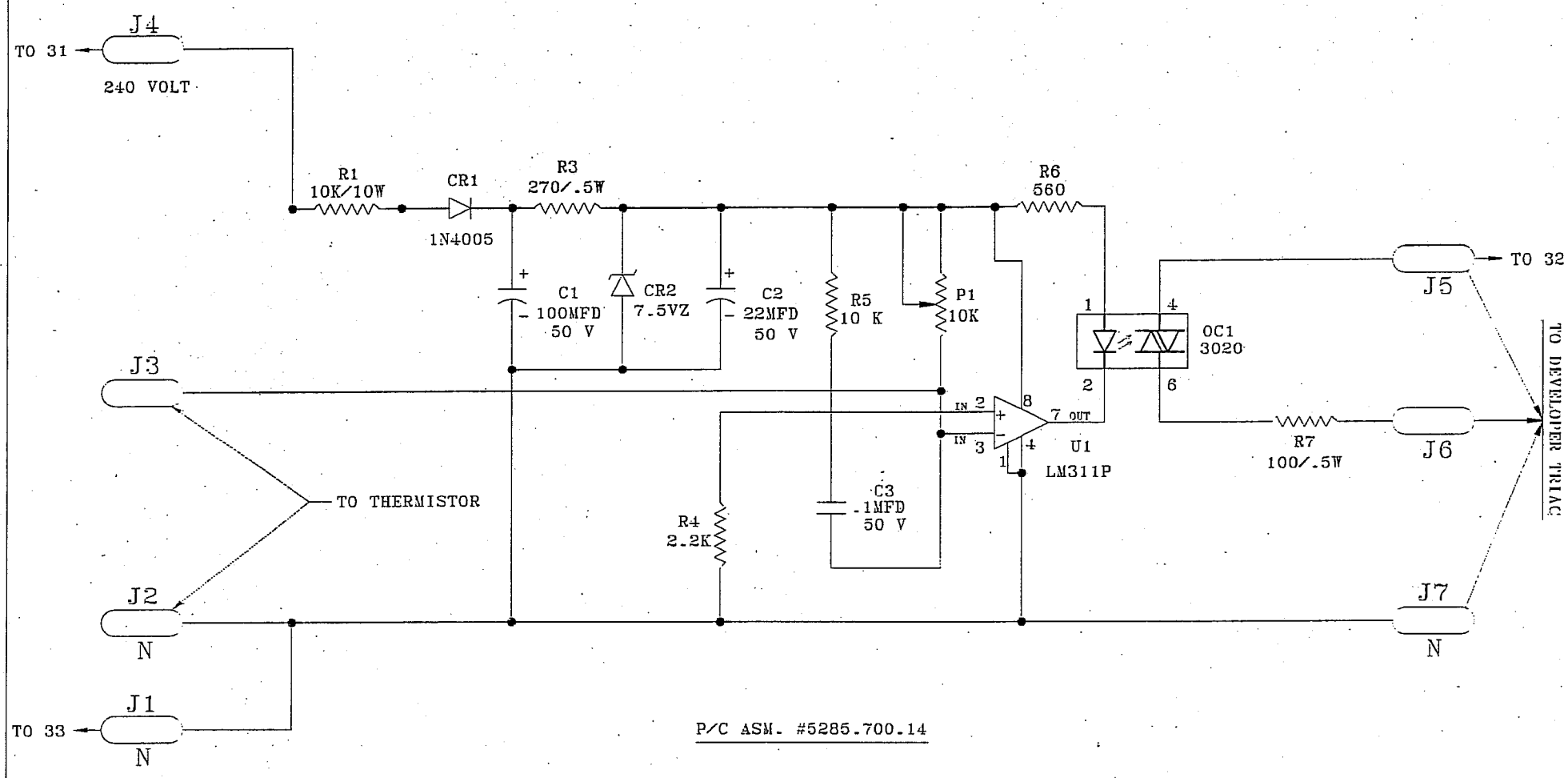

REV	DATE CODE	DRG	APP
00	9448	NKS	MOC
01	9564	NKS	PK
02	0315	WJF	PK

240 VOLT DEVELOPER TEMP. P/C SCHEMATIC

PART NUMBER:4194.300.0101

FOR USE IN : AX300 SERIES
AX350 SERIES
AX700 SERIES

ALPHATEK CORPORATION

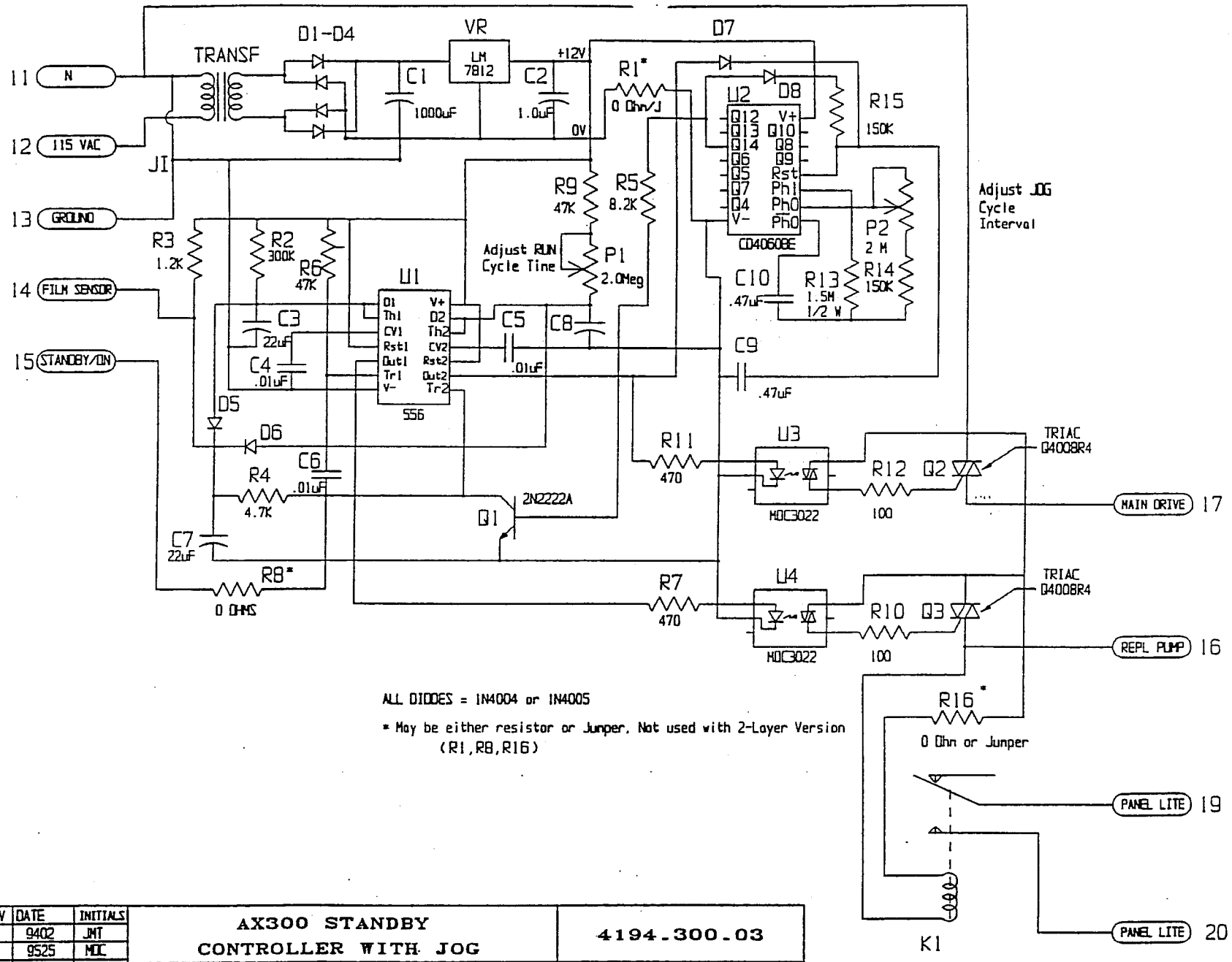

REV	DATE	INITIALS			
00	9402	JMT	AX300 STANDBY CONTROLLER WITH JOG		4194.300.03
01	9525	MDC			
			MATERIAL	FINISH	ALPHATEK CORPORATION

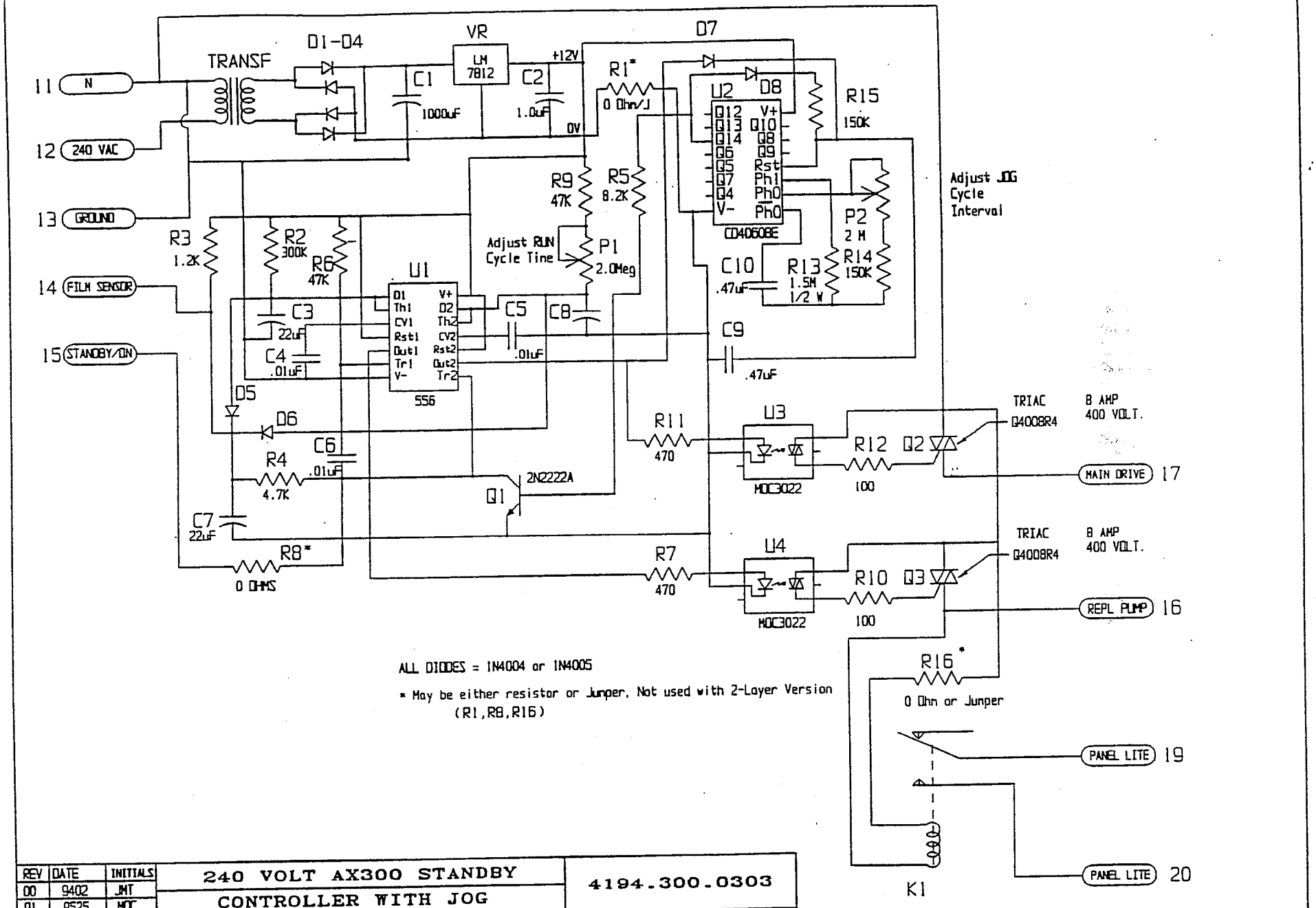

ALL DIODES = 1N4004 or 1N4005

* May be either resistor or Jumper, Not used with 2-Layer Version (R1,R8,R16)

REV	DATE	INITIALS	240 VOLT AX300 STANDBY CONTROLLER WITH JOG		4194.300.0303
00	9402	JMT			
01	9525	MDC			
			MATERIAL	FINISH	ALPHATEK CORPORATION

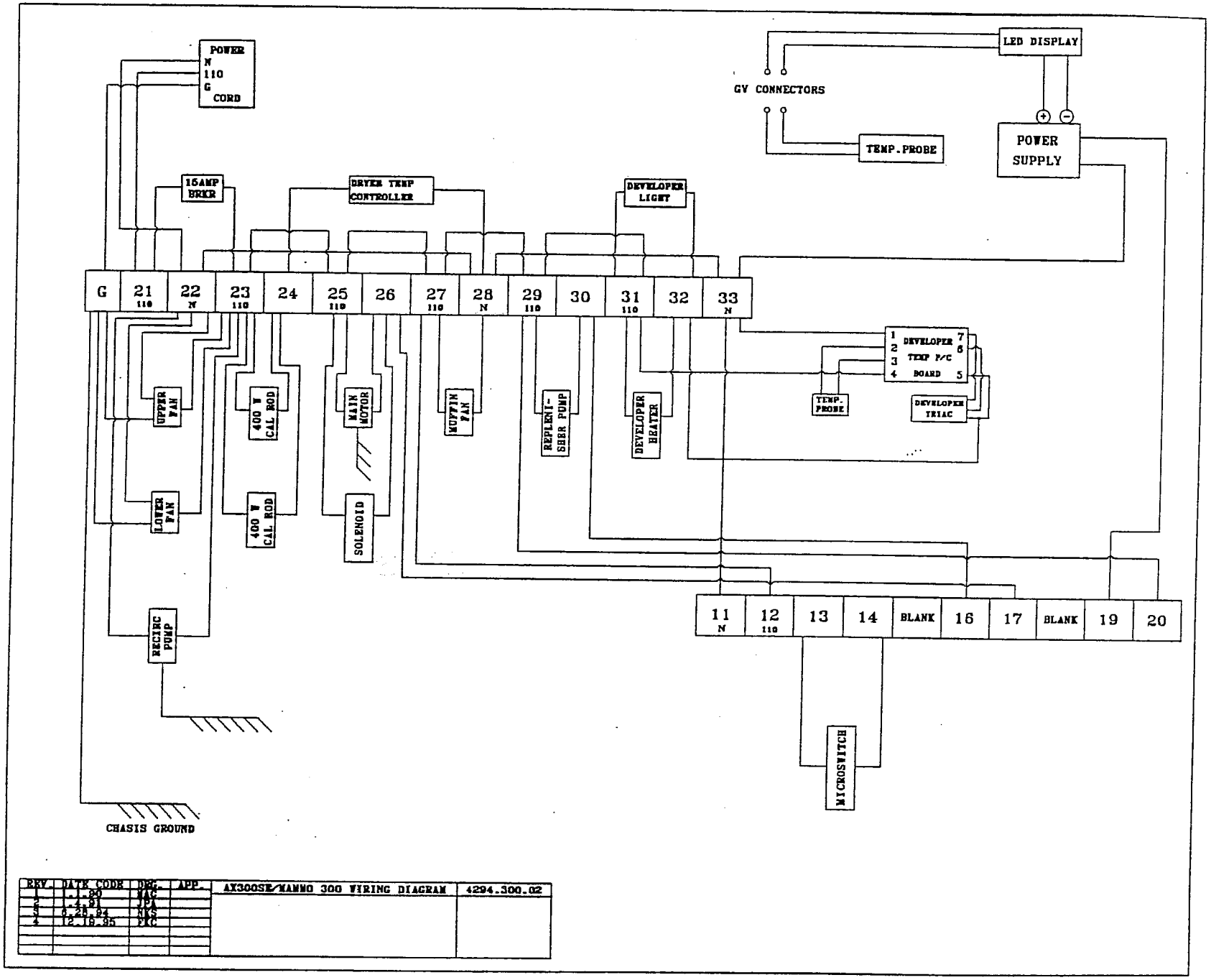

REV.	DATE CODE	DES.	APP.	AX300SE/MAMMO 300 WIRING DIAGRAM	4294.300.02
1	1.1.90	MAC			
2	1.4.91	JPA			
3	8.28.94	NKS			
4	12.18.95	FKC			

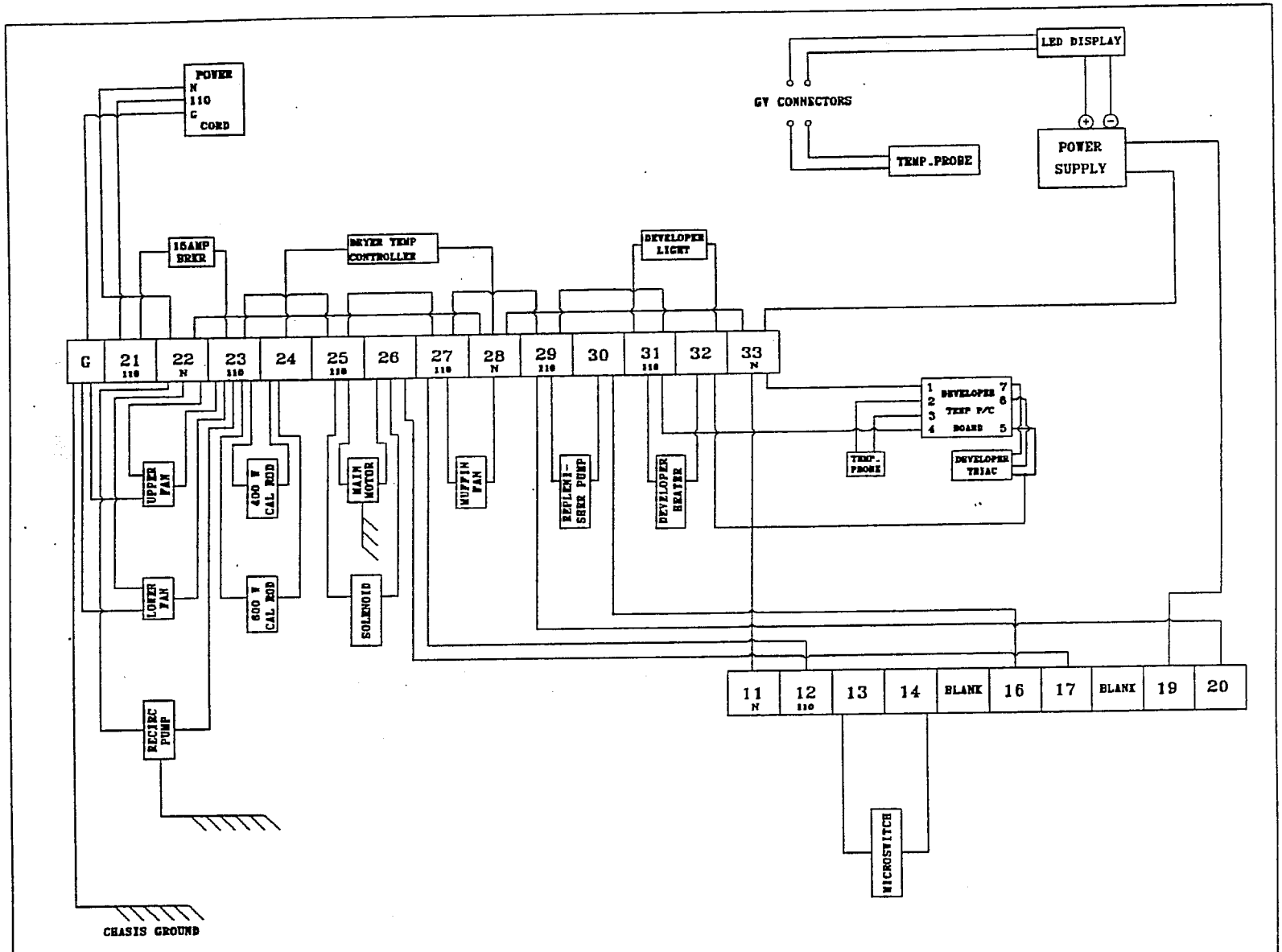

REV.	DATE CODE	DRG.	APP.	AX3905E WIRING DIAGRAM	4294.300.03
1	1.1.90	MAC			
2	1.4.91	MPA			
3	6.28.94	NKG			
4	12.10.95	FKC			

NOTE:WHEN TIGHTENING SOCKET SET SCREWS
INTO BUSHING,ALLOW BUSHING TO PIVOT
ON SET SCREWS.DO NOT OVERTIGHTEN.

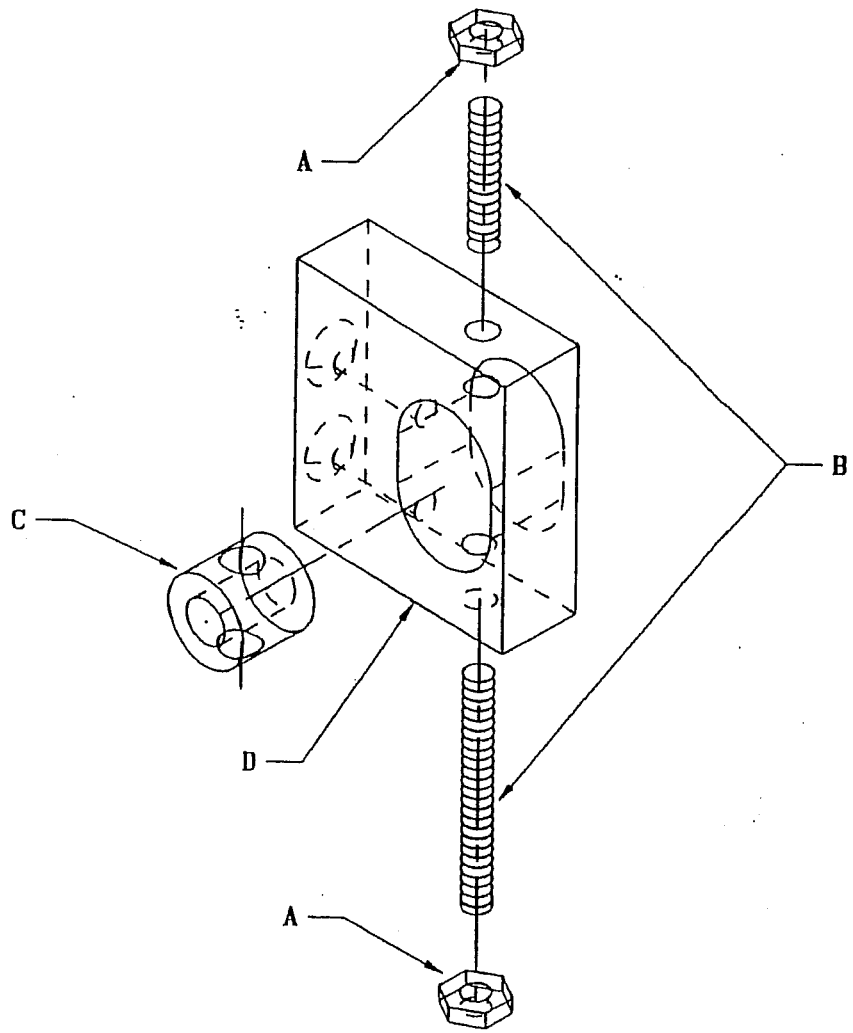

ALPHATEK
CORPORATION

NAME OF PART: AX300SE ADJUSTMENT BLOCK ASSEMBLY			PART NUMBER: 5136.300.01
REV # 5	DATE OF REV: 10/05/95	BY: FKC	FOR USE IN: AX300,AX390+MAMMO 300

LEGEND:

	DESCRIPTION	PART NUMBER	QUANTITY
A	1/4" - 28 JAM NUT	122.1428.3510	2 EA
B	1/4" - 28 X 1 SOCKET SET SCREW	124.1428.1621	2 EA
C	MAIN DRIVE SHAFT BUSHING	4111.600.02	1 EA
D	AX390 ADJUSTMENT BLOCK	4120.300.0201	1 EA

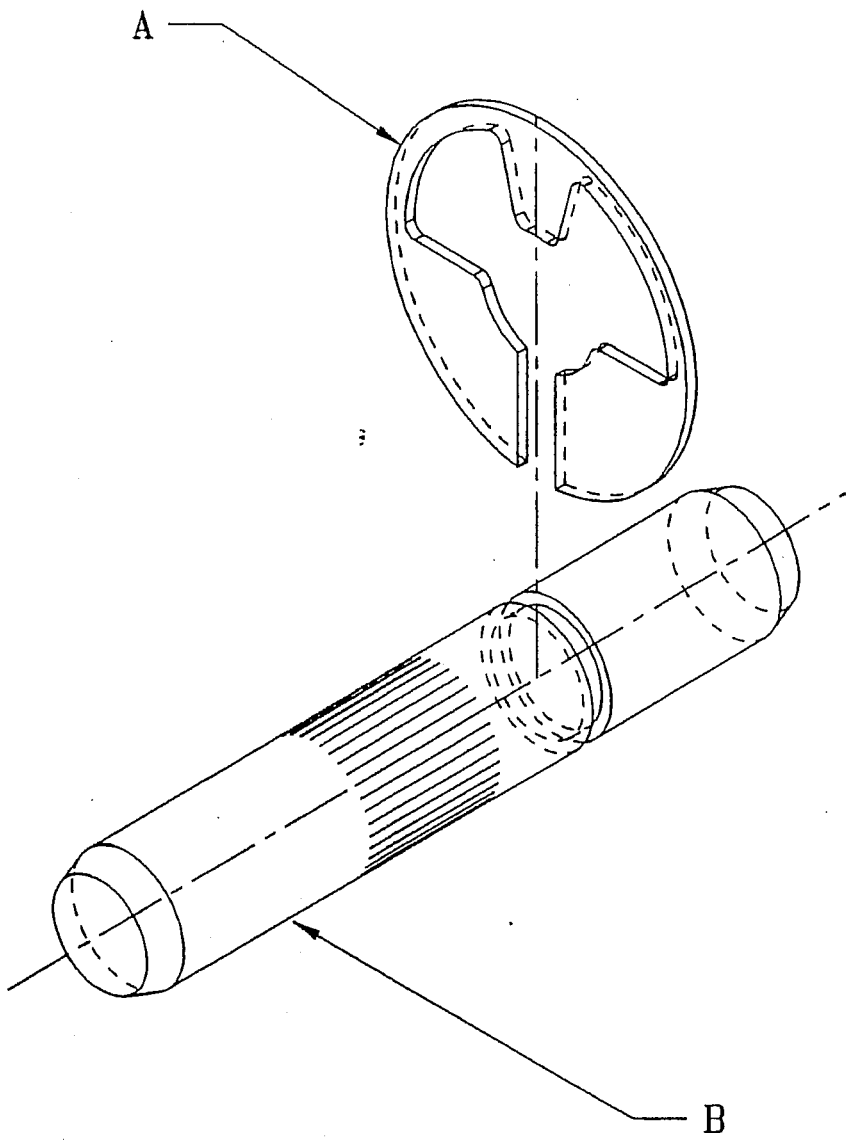

ALPHATEK
CORPORATION

NAME OF PART: SMALL PIN ASSEMBLY			PART NUMBER: 5136.600.02
REV # 1	DATE OF REV: 08/09/94	BY: NKS	FOR USE IN: ALL ALPHATEK PROCESSORS

LEGEND:

	DESCRIPTION	PART NUMBER	QUANTITY
A	1/4" RETAINING RING (316 STAINLESS STEEL)	123.7100.0250	1 EA
B	ROLLER PIN - SMALL (316 STAINLESS STEEL)	4114.600.05	1 EA
C			
D			

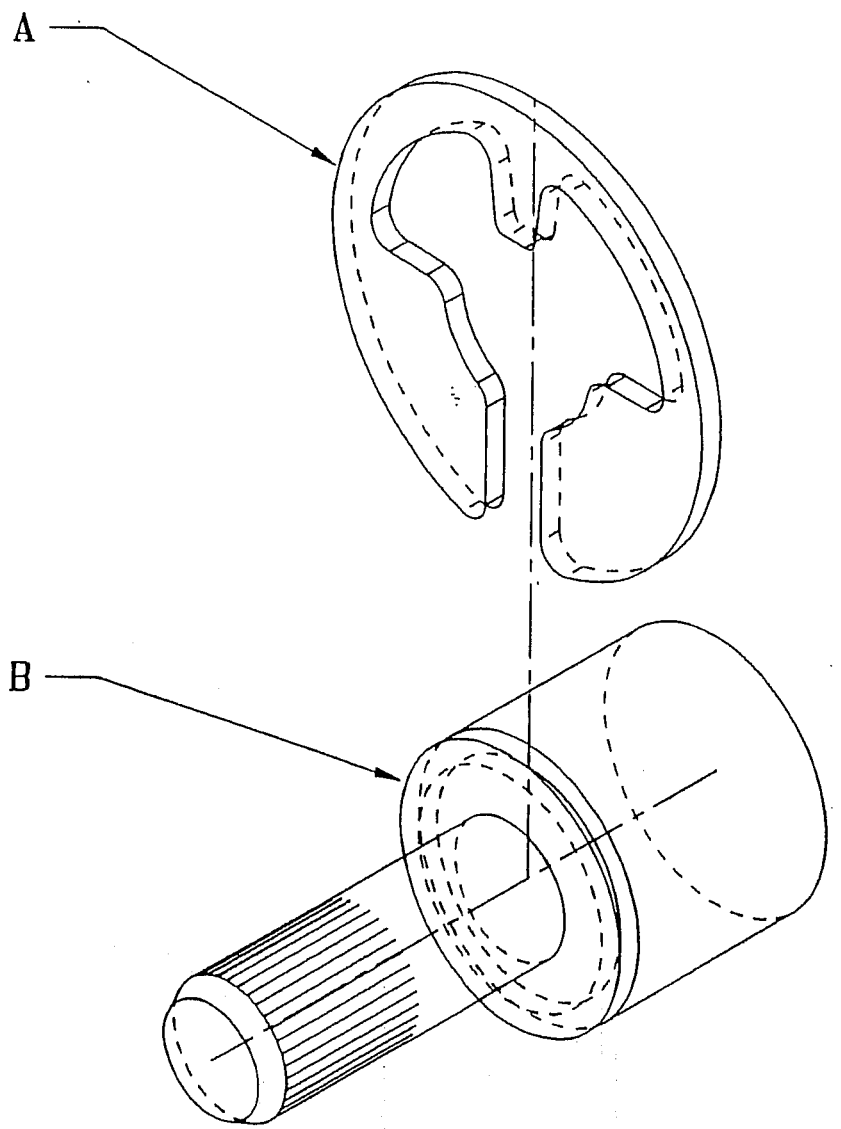

ALPHATEK
CORPORATION

NAME OF PART: MEDIUM PIN ASSEMBLY			PART NUMBER: 5136.600.03
REV # 1	DATE OF REV: 08/09/94	BY: NKS	FOR USE IN: ALL ALPHATEK PROCESSORS

LEGEND:

	DESCRIPTION	PART NUMBER	QUANTITY
A	1/2" RETAINING RING (316 STAINLESS STEEL)	123.7100.05	1 EA
B	ROLLER PIN - MEDIUM (316 STAINLESS STEEL)	4114.600.03	1 EA
C			
D			

NOTE: AFTER INSERTING SPIROL PIN ENSURE PIN DOES NOT STICK OUT INTO GEAR TEETH. THIS WILL CAUSE UNEVEN SPACING BETWEEN GEARS AND/OR DAMAGE GEAR(S).

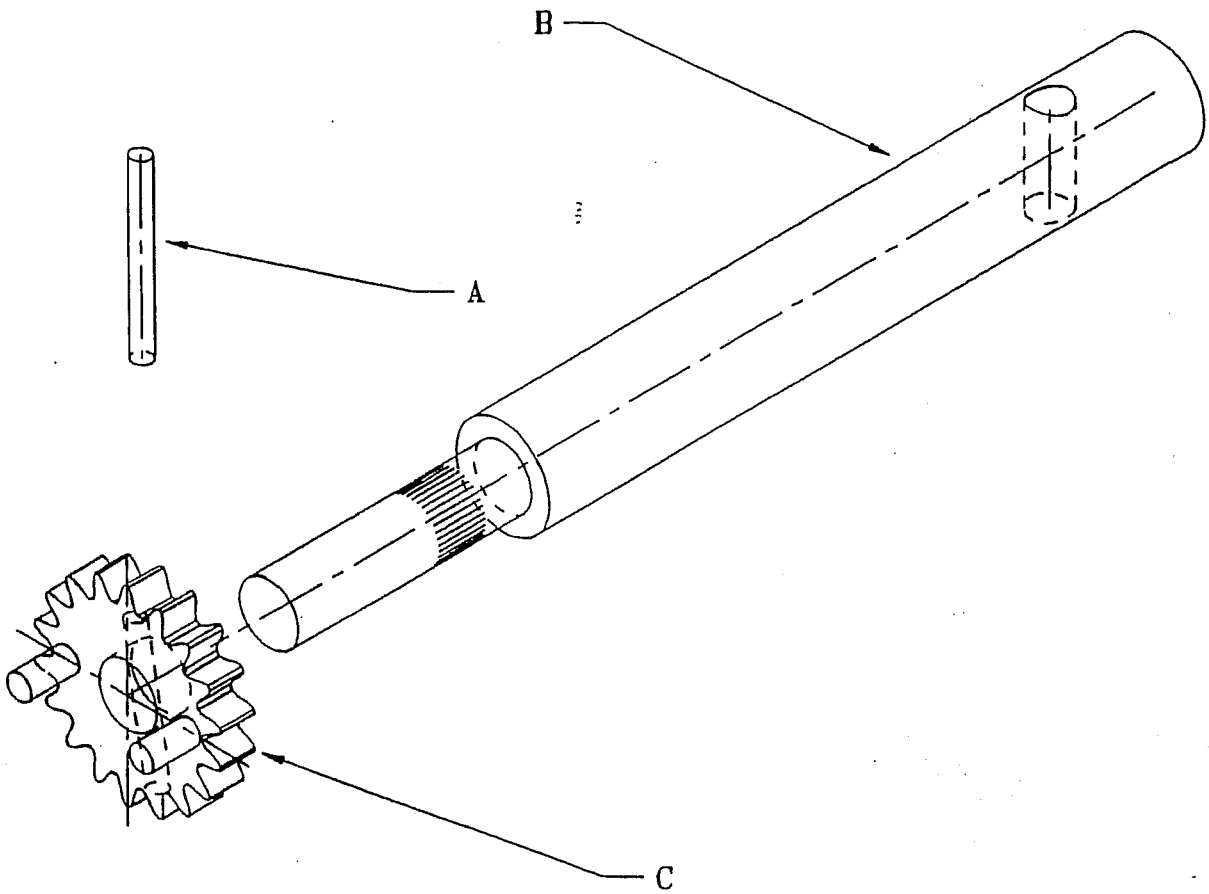

ALPHATEK CORPORATION

NAME OF PART: LARGE PIN ASSEMBLY			PART NUMBER: 5136.600.04
REV # 1	DATE OF REV: 08/09/94	BY: NKS	FOR USE IN: ALPHATEK DRYER RACKS

LEGEND:

	DESCRIPTION	PART NUMBER	QUANTITY
A	3/32" X 3/4" HEAVY DUTY SPIROL PIN	125.4061.2005	1 EA
B	ROLLER PIN - LARGE	4114.600.04	1 EA
C	DEVELOPER DRIVE ROLLER GEAR	4153.600.16	1 EA
D			

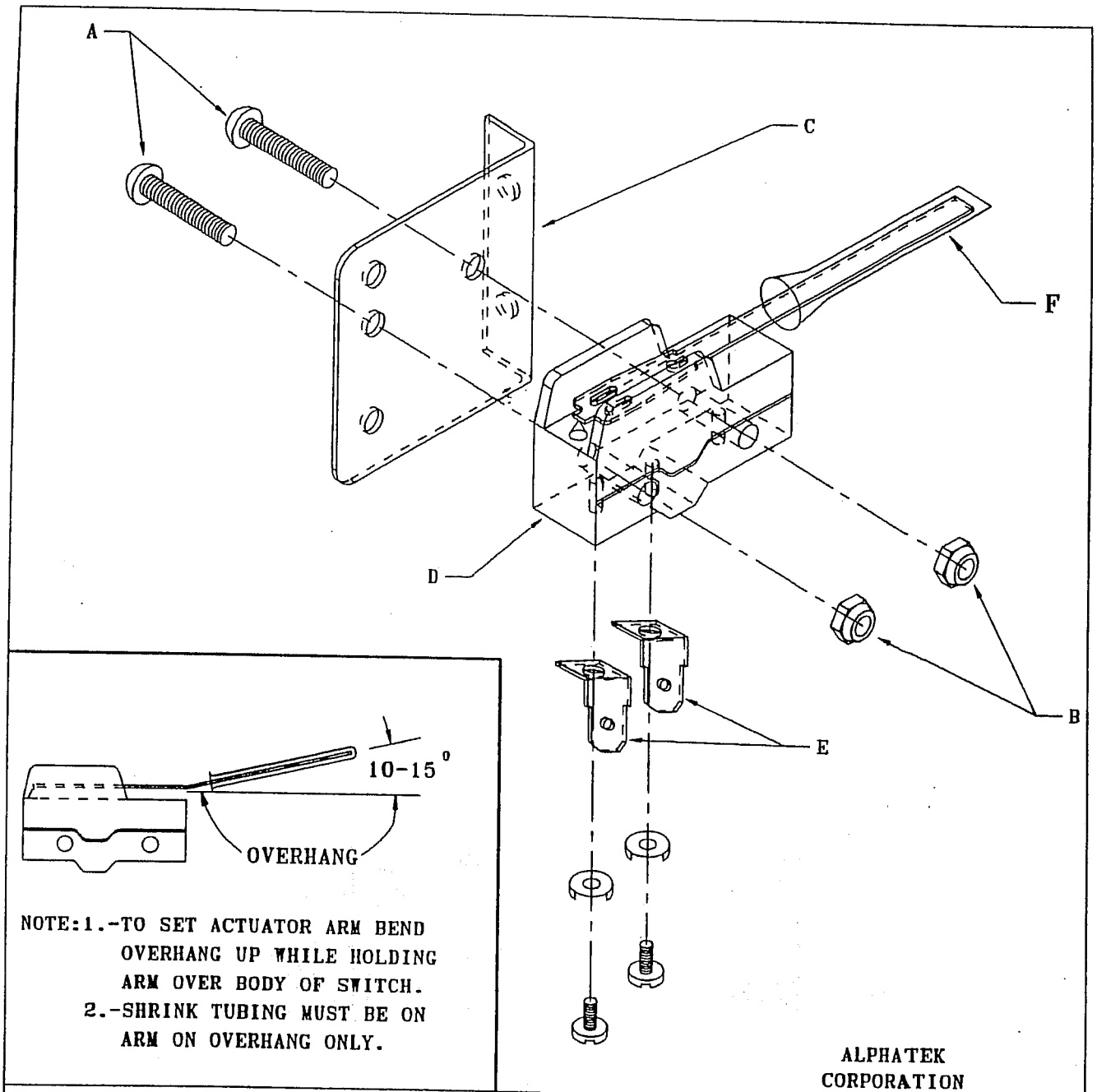

NOTE: 1.-TO SET ACTUATOR ARM BEND OVERHANG UP WHILE HOLDING ARM OVER BODY OF SWITCH.
2.-SHRINK TUBING MUST BE ON ARM ON OVERHANG ONLY.

ALPHATEK CORPORATION

NAME OF PART: 300 SERIES MICRO SWITCH ASSEMBLY			PART NUMBER: 5185.300.01
REV # 1	DATE OF REV: 08/15/94	BY: NKS	FOR USE IN: AX300, AX390+MAMMO 300

LEGEND:

	DESCRIPTION	PART NUMBER	QUANTITY
A	6-32 X 1 PHILIPS PAN HEAD MACH SCREW	121.0632.1659	2 EA
B	6-32 18-8 LOCKNUT	122.0632.95	2 EA
C	300 REPLENISHER BRACKET	4141.300.04	1 EA
D	MICRO SWITCH	4181.600.09	1 EA
E	.250 MALE SPADE LUD	762.8200	2 EA
F	1/4" HEAT SHRINK TUBING	135.3324.10	1.5 IN

NOTE: THERMAL COMPOUND MUST BE USED TO ALLOW HEAT TRANSFER FROM TRIAC.
PLACE COMPOUND AT BASE OF THREADS ON SHOULDER OF TRIAC.

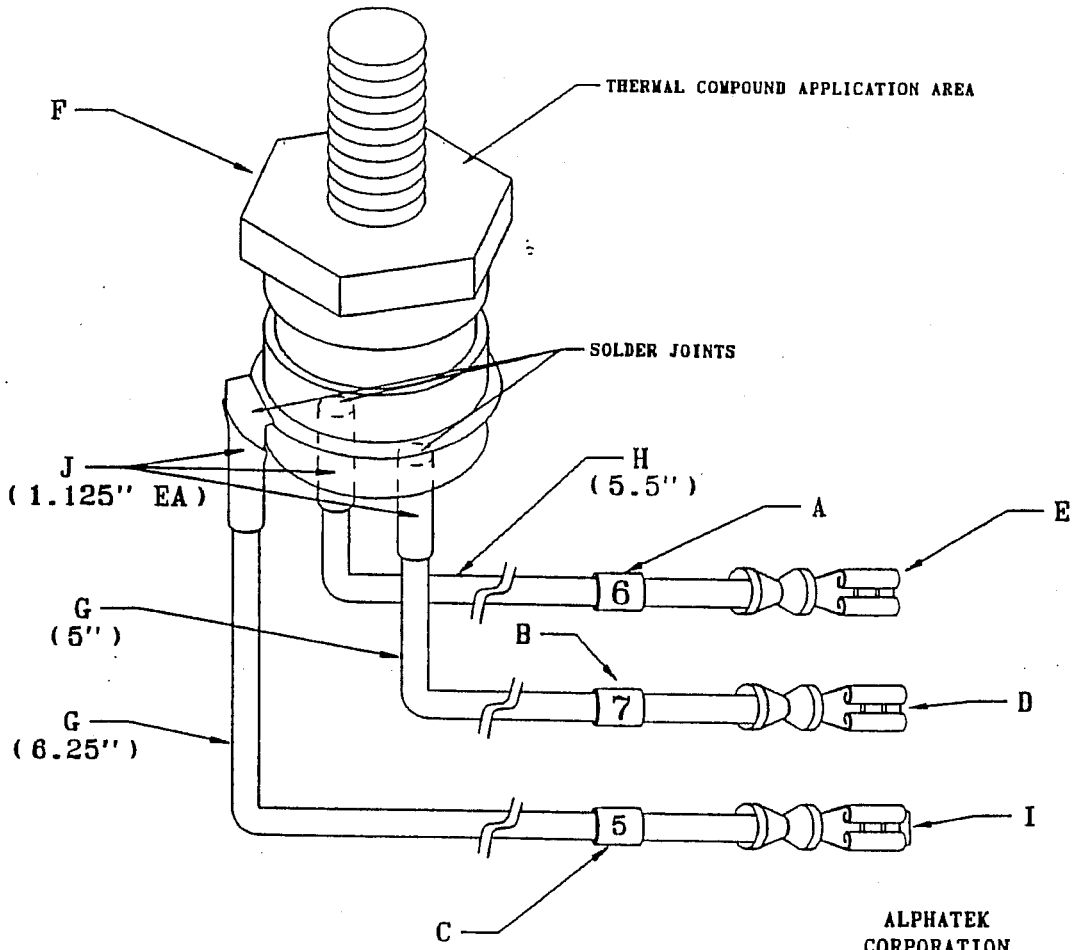

ALPHATEK
CORPORATION

NAME OF PART: DEVELOPER TRIAC ASSEMBLY			PART NUMBER: 5185.300.10
REV # 12	DATE OF REV: 9590	BY: FKC	FOR USE IN: AX300, AX390+MAMMO 300

LEGEND:

	DESCRIPTION	PART NUMBER	QUANTITY
A	#6 VINYL WIRE MARKER	161.3250.06	1 EA
B	#7 VINYL WIRE MARKER	161.3250.07	1 EA
C	#5 VINYL WIRE MARKER	161.3250.05	1 EA
D	14-16 GA INS CRIMP TERMINAL	762.8620	1 EA
E	22-18 GA INS CRIMP TERMINAL	762.8690	1 EA
F	200 VOLT 15 AMP TRIAC	784.3155.2020	1 EA
G	16 GA SINGLE CONDUCTOR WHITE WIRE	8184.600.05	11.25 IN
H	18 GA SINGLE CONDUCTOR ORANGE WIRE	8184.700.04	5.5 IN
I	14-16 GA PIGGY BACK CRIMP TERMNAL	762.8900	1 EA
J	1/4 INCH HEAT SHRINK TUBING	135.3324.10	3.375 IN

NOTE: WIRES MUST BE SOLDERED TO CIRCUIT BREAKER TAB TERMINALS.
SHRINK TUBING MUST COVER SOLDER JOINT.

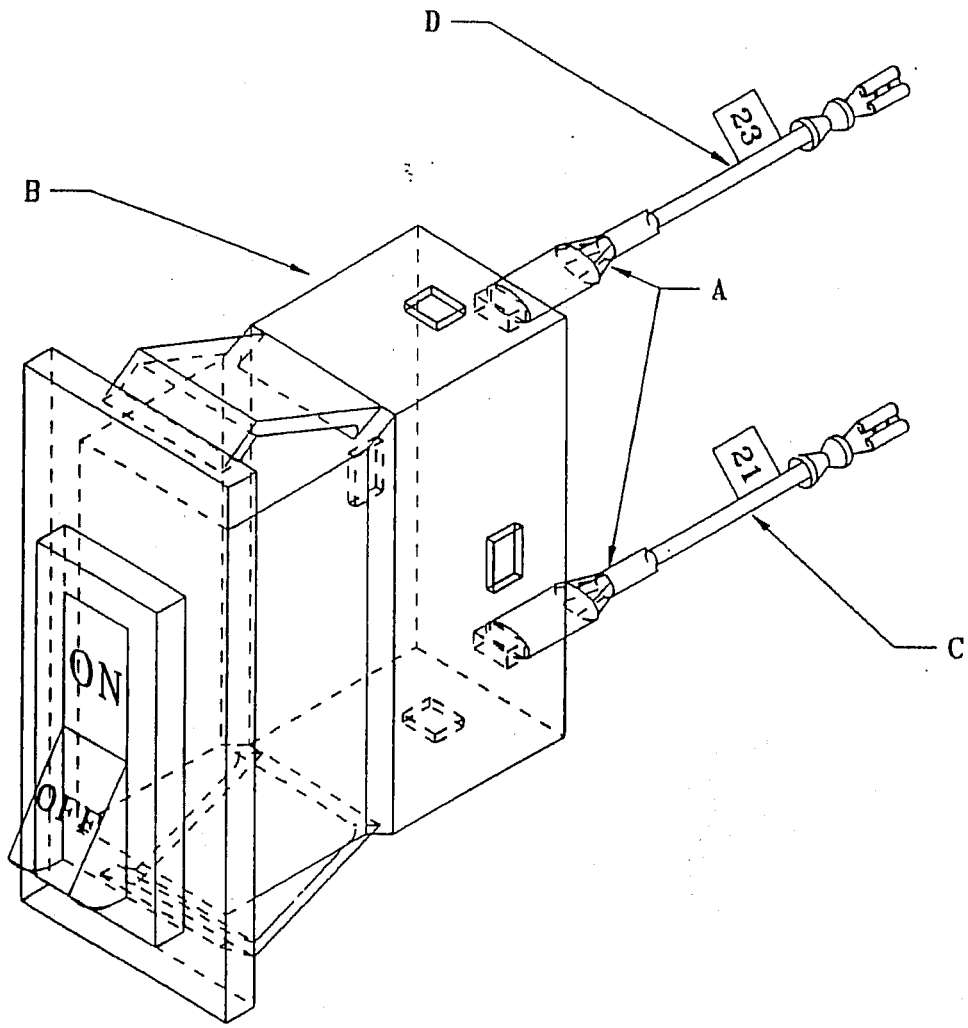

ALPHATEK
CORPORATION

NAME OF PART: 15 AMP ON-OFF BREAKER ASSEMBLY (120 V)			PART NUMBER: 5185.350.34
REV # 6	DATE OF REV: 9593	BY: FKC	FOR USE IN: AX300, AX390+MAMMO 300

LEGEND:

OK

	DESCRIPTION	PART NUMBER	QUANTITY
A	1/4" X 1" HEAT SHRINK TUBING	135.3324.10	.25 IN
B	15 AMP ON-OFF BREAKER (120 V)	4181.350.01	1 EA
C	CIRCUIT BREAKER BLACK WIRE ASSEMBLY	5185.350.48	1 EA
D	CIRCUIT BREAKER WHITE WIRE ASSEMBLY	5185.350.49	1 EA

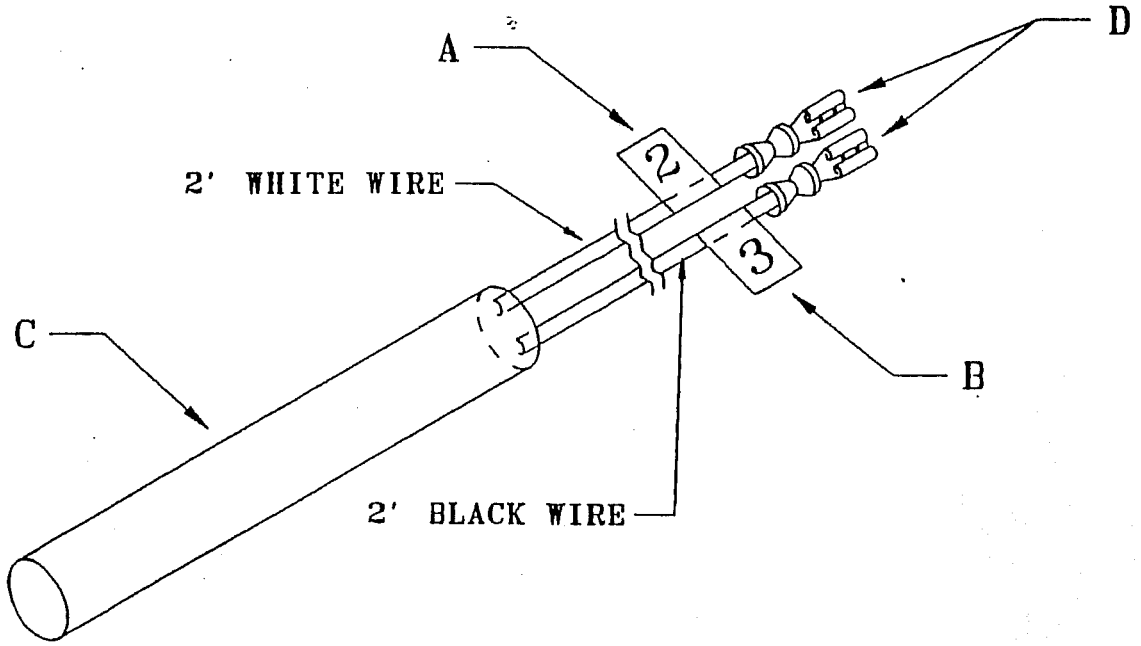

ALPHATEK
CORPORATION

NAME OF PART: DEVELOPER SENSOR THERMISTOR ASSEMBLY 2'			PART NUMBER: 5185.700.05
REV #8	DATE OF REV: 9593	BY: FKC	FOR USE IN: 300 SERIES, AX700

LEGEND:

	DESCRIPTION	PART NUMBER	QUANTITY
A	#2 VINYL WIRE MARKER	161.3250.02	1 EA
B	#3 VINYL WIRE MARKER	161.3250.03	1 EA
C	DEVELOPER CONTROL THERMISTOR 2'	4185.700.01	1 EA
D	22 - 18 GA INS CRIMP TERMINAL	762.8690	2 EA

NOTE: ALL WORM GEARS SHOULD FACE THE SAME DIRECTION WITH MOUNTING HARDWARE END FACING THE DRIVE SHAFT SPROCKET.

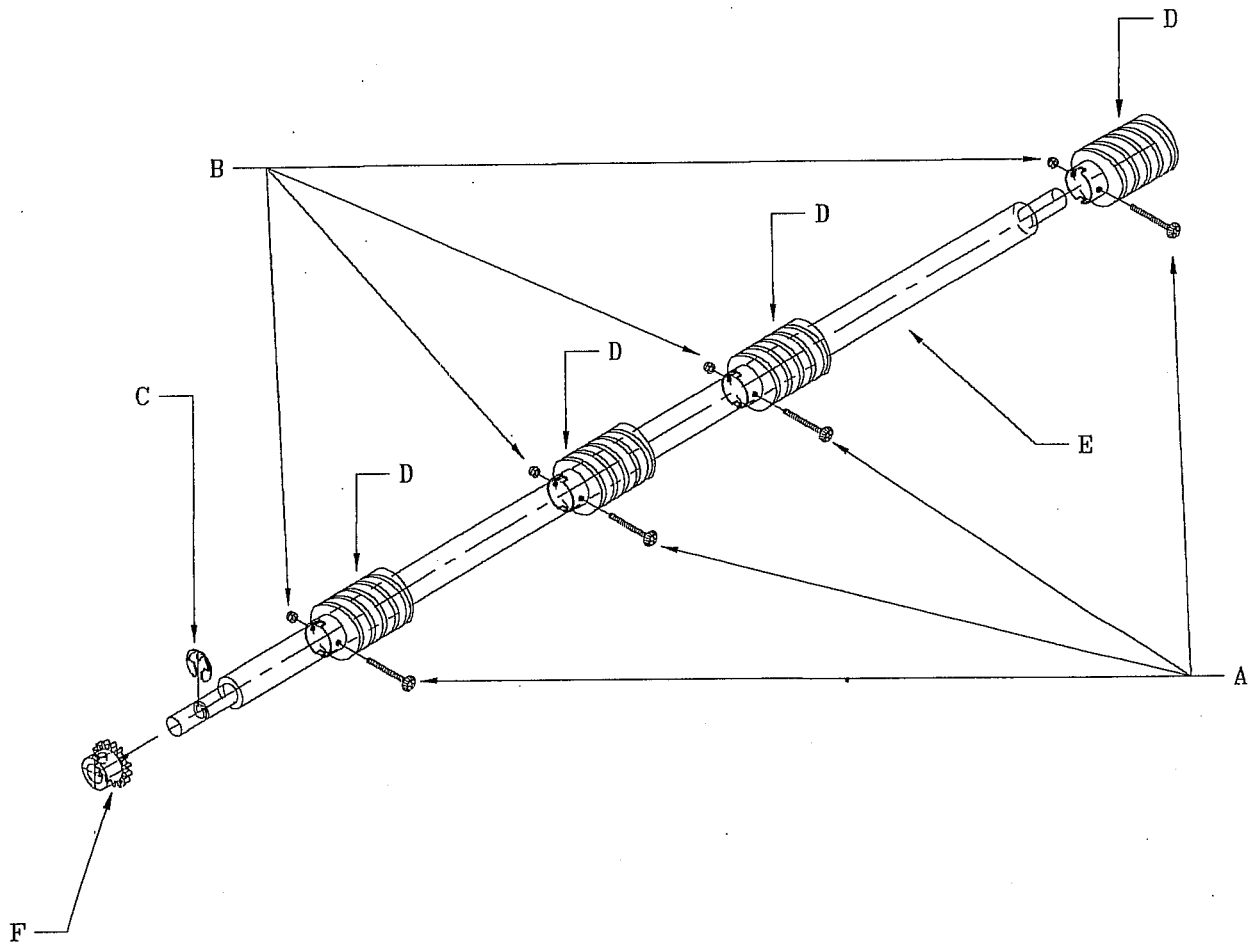

ALPHATEK
CORPORATION

NAME OF PART: AX300SE MAIN DRIVE SHAFT ASSEMBLY.			PART NUMBER: 5236.300.01
REV #6	DATE OF REV: 0370	BY: WJF	FOR USE IN: AX300

LEGEND:

	DESCRIPTION	PART NUMBER	QUANTITY
A	6-32 X 1" PHILIPS PAN HEADMACH SCREW	121.0632.1659	4 EA
B	6-32 18-8 LOCKNUT	122.0632.95	4 EA
C	3/8" RETAINING RING	123.7100.0370	1 EA
D	WORM GEAR	4153.600.05	4 EA
E	AX300SE MAIN DRIVE SHAFT	4214.300.01	1 EA
F	300 MN DRIVE SHAFT SPROCKET 15T 3/8"	4133.600.01	1 EA

NOTE: ALL WORM GEARS SHOULD FACE THE SAME DIRECTION WITH MOUNTING HARDWARE END FACING THE DRIVE SHAFT SPROCKET.

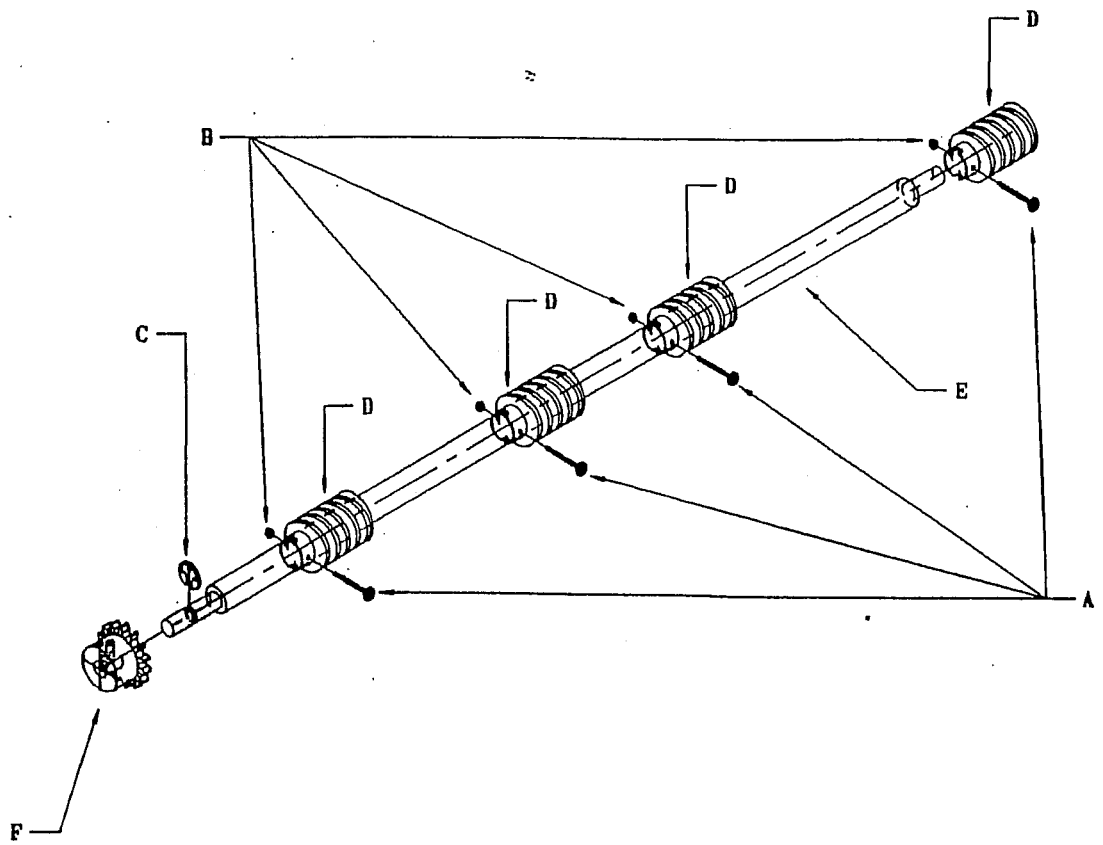

ALPHATEK
CORPORATION

NAME OF PART: AX390 MAIN DRIVE SHAFT ASSEMBLY			PART NUMBER: 5236.300.02
REV #2	DATE OF REV: 9591	BY: FKC	FOR USE IN: AX390

LEGEND:

	DESCRIPTION	PART NUMBER	QUANTITY
A	6-32 X 1" PHILIPS PAN HEADMACH SCREW	121.0632.1659	4 EA
B	6-32 18-8 LOCKNUT	122.0632.95	4 EA
C	3/8" RETAINING RING	123.7100.0370	1 EA
D	WORM GEAR	4153.600.05	4 EA
E	AX300SE MAIN DRIVE SHAFT	4214.300.01	1 EA
F	AX390 MN DRIVE SHAFT SPROCKET 20T 3/8"	4133.300.01	1 EA

NOTE: ALL WORM GEARS SHOULD FACE THE SAME DIRECTION WITH MOUNTING HARDWARE END FACING THE DRIVE SHAFT SPROCKET.

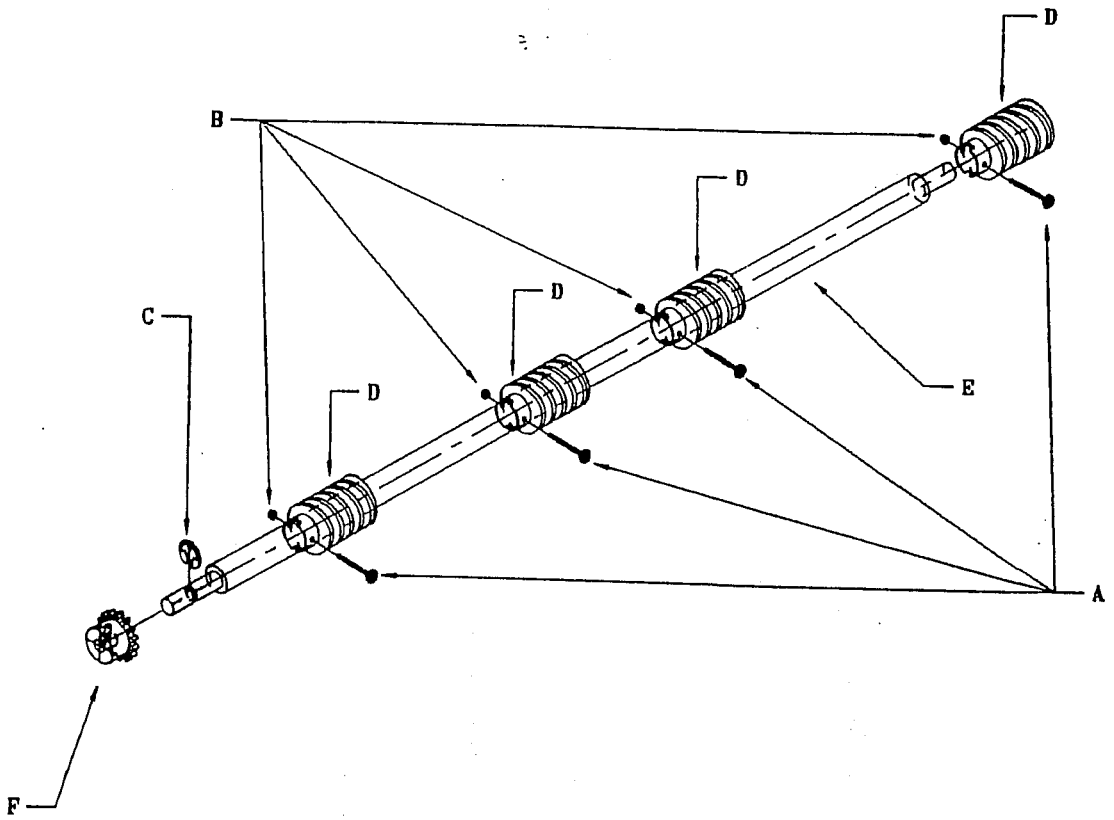

ALPHATEK CORPORATION

NAME OF PART: MAMMO MAIN DRIVE SHAFT ASSEMBLY			PART NUMBER: 5236.300.03
REV #2	DATE OF REV: 9591	BY: FKC	FOR USE IN: MAMMO 300

LEGEND:

	DESCRIPTION	PART NUMBER	QUANTITY
A	6-32 X 1" PHILIPS PAN HEADMACH SCREW	121.0632.1659	4 EA
B	6-32 18-8 LOCKNUT	122.0632.95	4 EA
C	3/8" RETAINING RING	123.7100.0370	1 EA
D	WORM GEAR	4153.600.05	4 EA
E	AX300SE MAIN DRIVE SHAFT	4214.300.01	1 EA
F	MAMMO 300 MN DRIVE SHAFT SPROCKET 14T 3/8"	4133.300.02	1 EA

NOTE: 1. ENSURE ROLLER IS FREE OF NICKS, SCRATCHES AND DIVOTS.
2. ENSURE SPIROL PIN, ONCE INSERTED, DOES NOT STICK-OUT INTO TEETH OF GEAR.

CAUTION:- DO NOT USE ABRASIVE CLEANER OR PADS WHEN CLEANING ROLLER.
USE ONLY WARM WATER AND A LINT-FREE CLOTH TO CLEAN ROLLER.

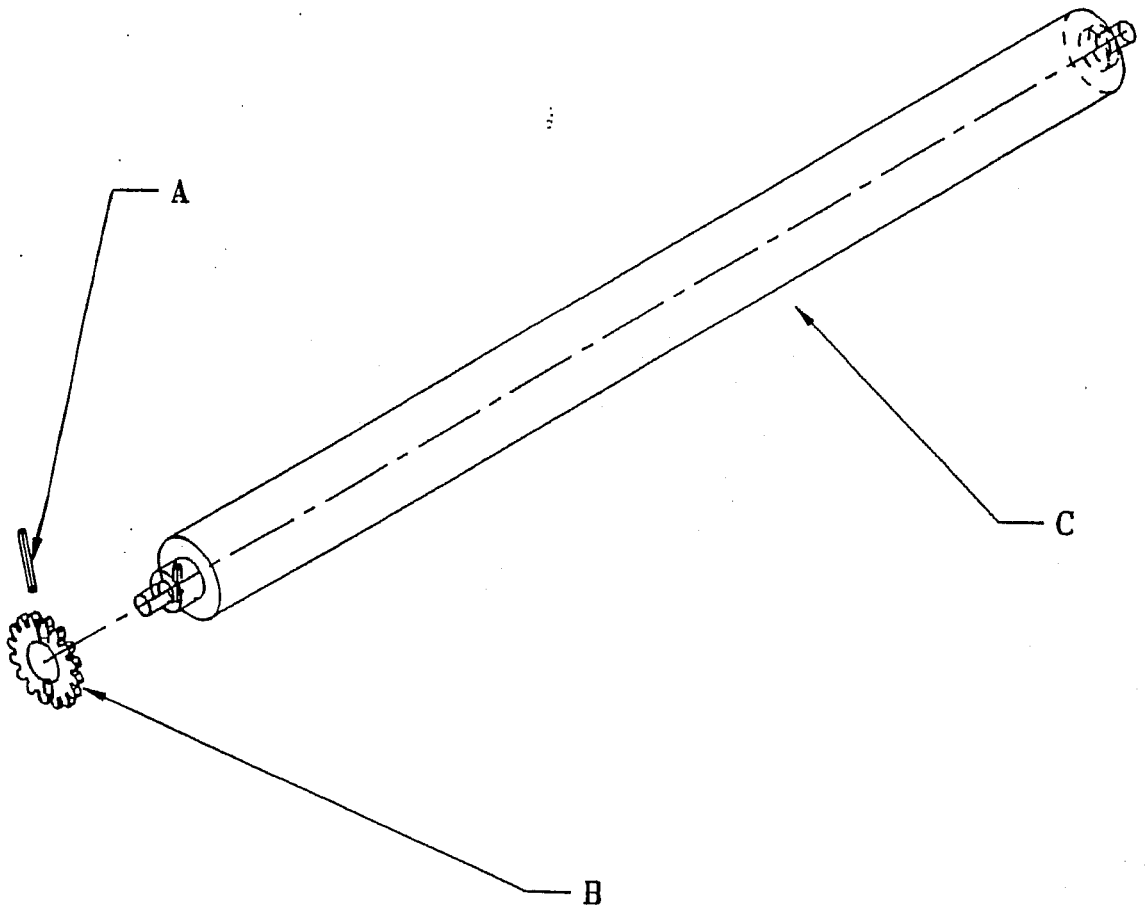

ALPHATEK
CORPORATION

NAME OF PART: SQUEEGEE ROLLER ASSEMBLY			PART NUMBER: 5236.600.01
REV # 3	DATE OF REV: 08/30/94	BY: NKS	FOR USE IN: ALL ALPHATEK PROCESSOR

LEGEND:

	DESCRIPTION	PART NUMBER	QUANTITY
A	3/32" X 3/4" HEAVY DUTY SPIROL PIN	125.4061.2005	1 M
B	SQUEEGEE GEAR	4153.600.14	1 EA
C	SQUEEGEE ROLLER	4267.600.02	1 EA

NOTE:ENSURE THAT SPIROL PIN (B) IS INSERTED SO THAT PIN IS STICKING-OUT OF SHAFT EQUALLY.

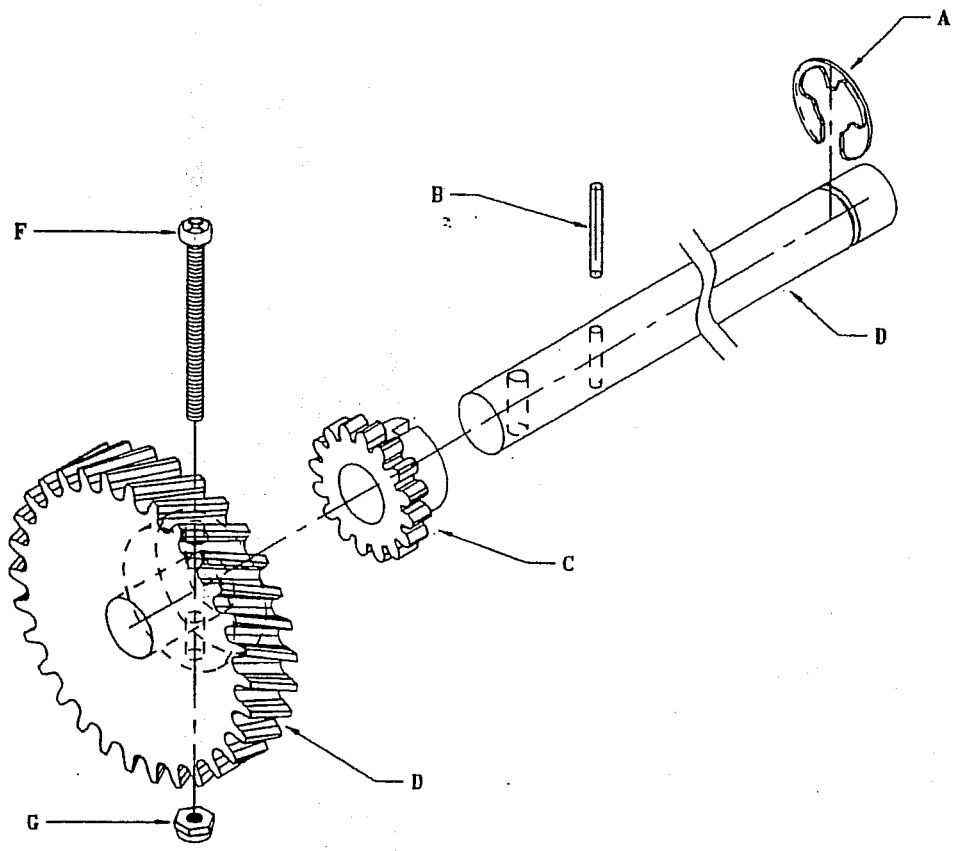

ALPHATEK
CORPORATION

NAME OF PART: RACK DRIVE SHAFT ASSEMBLY			PART NUMBER: 5236.600.06
REV # 2	DATE OF REV: 09/01/94	BY: NKS	FOR USE IN: ALL ALPHATEK PROCESSOR

LEGEND:

	DESCRIPTION	PART NUMBER	QUANTITY
A	1/2" RETAINING RING	123.7100.05	1 EA
B	3/32" X 3/4" HEAVY DUTY SPIROL PIN	125.4061.2005	1 EA
C	CHEM RACK DRIVE GEAR	4153.600.53	1 EA
D	RACK DRIVE SHAFT	4214.600.03	1 EA
E	RACK DRIVE GEAR	4153.600.07	1 EA
F	6-32 X 1-1/2" PHILIPS PAN HEAD MECH MS SCREW	121.0632.2459	1 EA
G	6-32 18-8 LOCKNUT	122.0632.95	1 EA

NOTE: 1. ENSURE THERE ARE NO BURRS OR WELD SLAG OF FILM SIDE OF GUIDE.
2. SUB-PARTS ARE AVAILABLE SEPERATLY.
3. FOR PROCESSORS MANUFACTURED PRIOR TO NOV 1, 1993.
4. TO SET GUIDE - A. SET GUIDE (E) ON FLAT SURFACE.
ENSURE THAT ALL CROSSOVER GUIDE RIBS SIT FLAT ON SURFACE.
B. ENSURE CLAMPS (C) ARE SQUARE TO TABLE SURFACE.

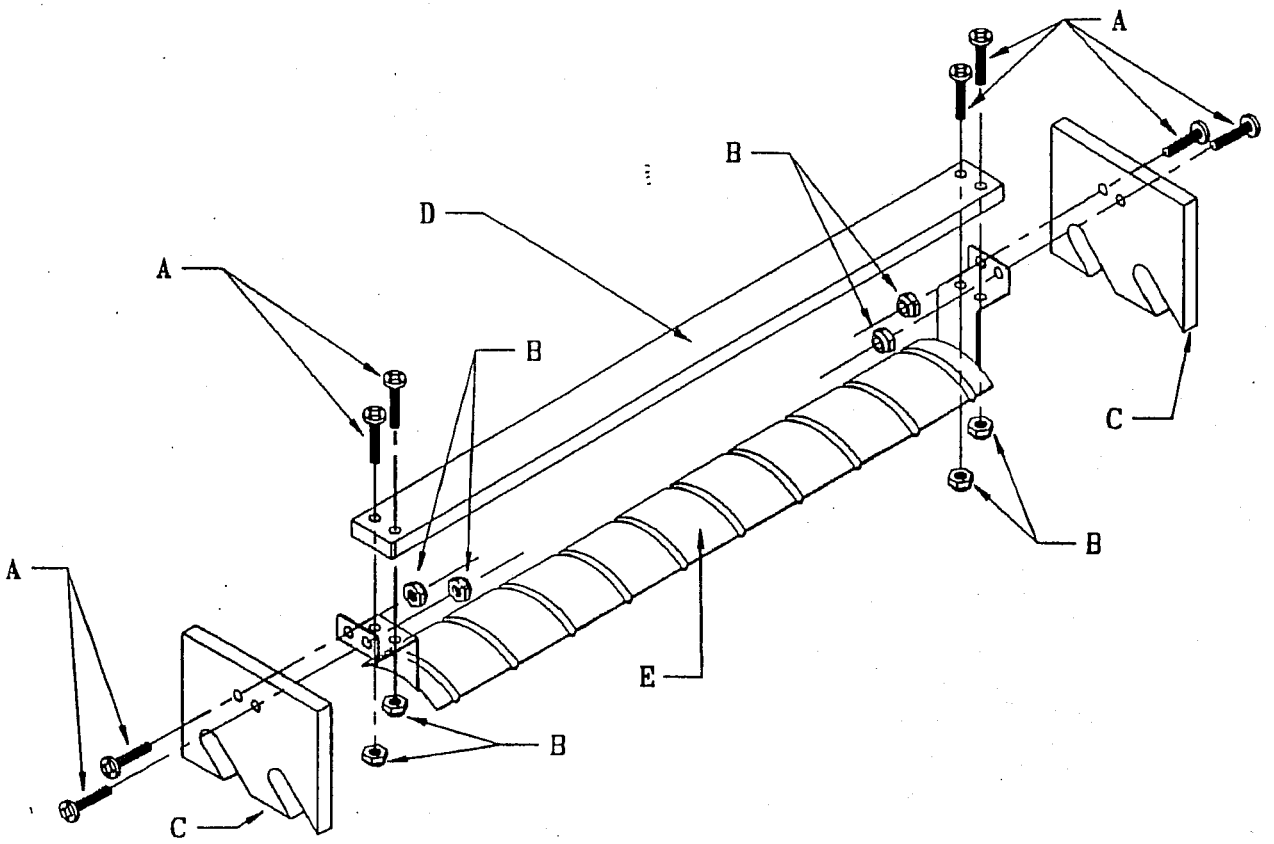

NOTE: FOR PROCESSORS BUILT BEFORE FEBRUARY 1993.

ALPHATEK CORPORATION

NAME OF PART: CROSSOVER GUIDE ASSEMBLY			PART NUMBER: 5236.700.02
REV # 11	DATE OF REV: 09/14/94	BY: NKS	FOR USE IN: ALL ALPHATEK PROCESSORS.

LEGEND:

	DESCRIPTION	PART NUMBER	QUANTITY
A	6-32 X 1/2" PHILIPS PAN HEAD MACH SCREW	121.0632.0859	8 EA
B	6-32 18-8 LOCKNUT	122.0632.95	8 EA
C	CROSSOVER CLAMP	4157.700.03	2 EA
D	CROSSOVER GUIDE PLATE	4241.700.15	1 EA
E	CHEMICAL CROSSOVER GUIDE	4242.700.02	1 EA

NOTE: 1. ENSURE FILM SURFACE OF GUIDE IS FREE OF BURRS OR WELD SLAG.
2. IF GUIDE IS "BOWED" SLIDE CROSSOVER GUIDE SLEEVE (C) TO EITHER SIDE OF ASSEMBLY.
* GUIDES ON ALL PROCESSORS MANUFACTURED AFTER NOV 1,1993.
THIS ASSEMBLY CAN BE RETROFITTED TO UNITS MANUFACTURED PRIOR TO NOV 1,1993.
CALL FACTORY FOR ASSISTANCE.

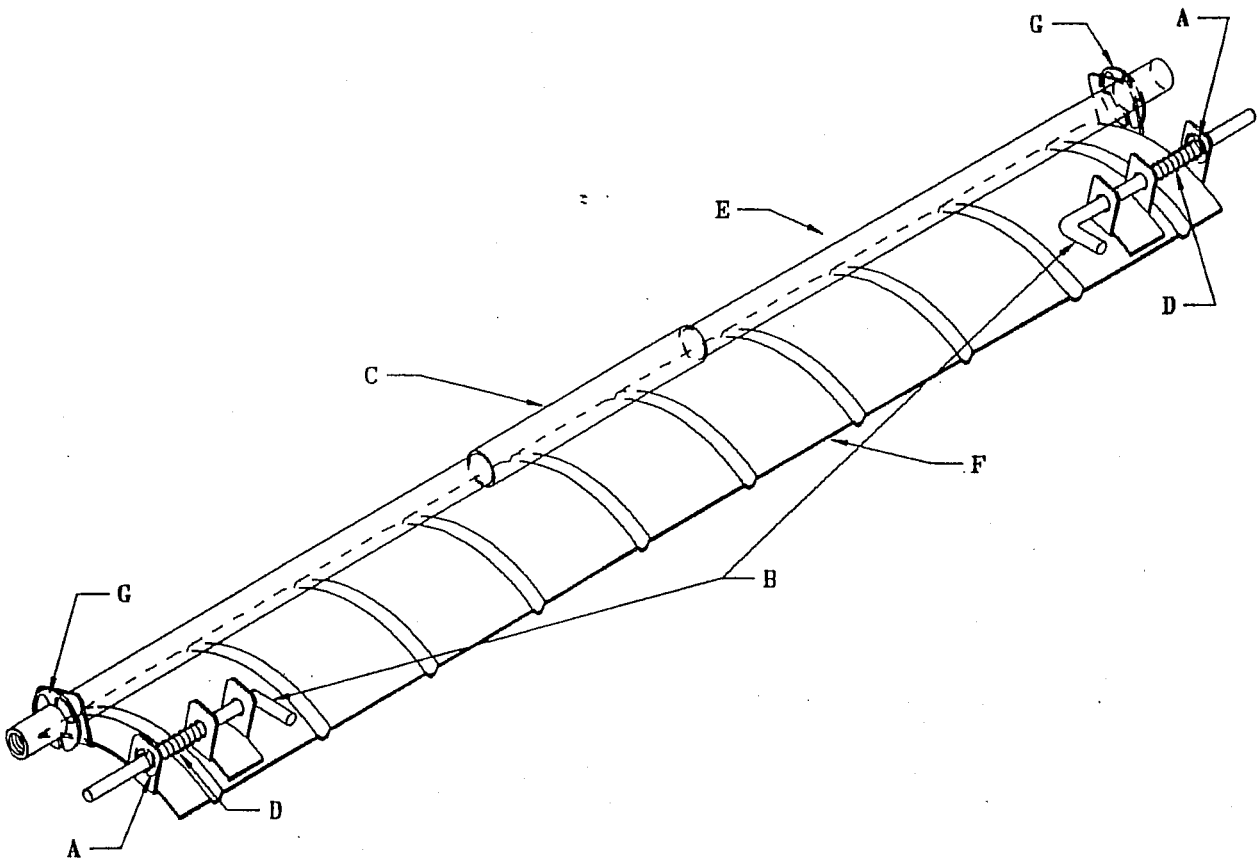

ALPHATEK
CORPORATION

NAME OF PART: CROSSOVER GUIDE ASSEMBLY '93			PART NUMBER: 5236.700.07
REV # 1	DATE OF REV: 09/13/94.	BY: NKS	FOR USE IN: ALL ALPHATEK PROCESSORS.

LEGEND:

	DESCRIPTION	PART NUMBER	QUANTITY
A	3/16" RETAINING RING	123.7100.1870	2 EA
B	CROSSOVER SLIDE PIN	4141.300.05	2 EA
C	CROSSOVER GUIDE SLEEVE	4157.300.02	1 EA
D	CROSSOVER SPRING	4177.700.01	2 EA
E	CROSSOVER TIE BAR	4214.600.0701	1 EA
F	CHEMICAL CROSSOVER GUIDE PLUS	4242.700.0501	1 EA
G	3/8" RETAINING RING	123.7100.0370	2 EA

NOTE: SUB-PARTS ARE AVAILABLE SEPARATELY.

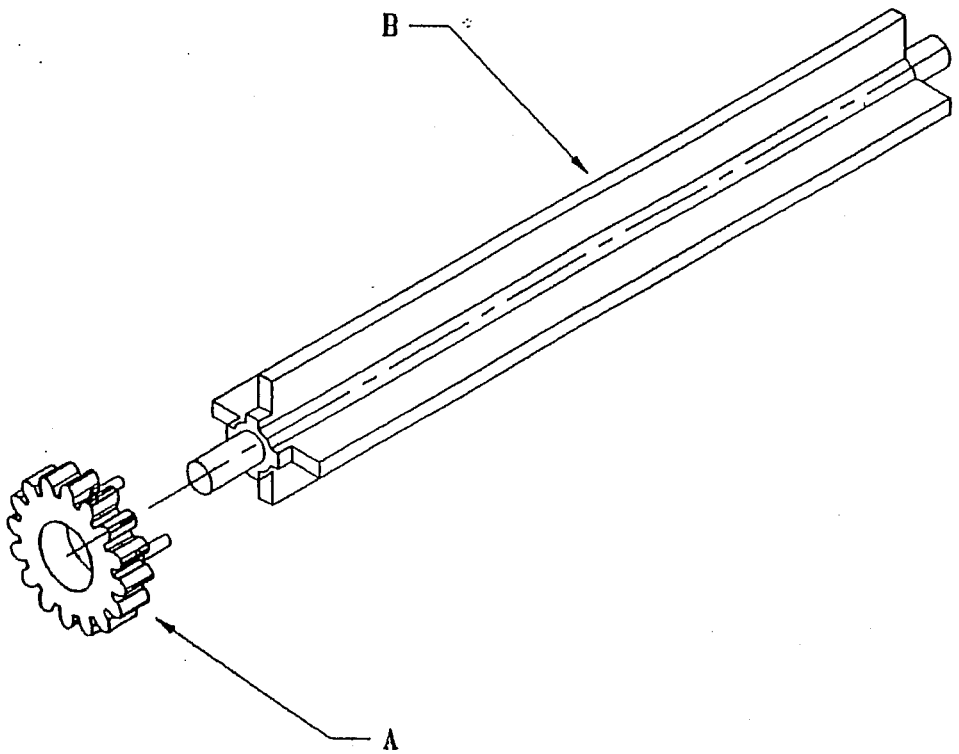

ALPHATEK
CORPORATION

NAME OF PART: AGITATOR PADDLE ASSEMBLY.			PART NUMBER: 5262.600.02
REV # 3	DATE OF REV: 10/05/95	BY: FKC	FOR USE IN: AX300, AX350 AX390+MAMMO 300

LEGEND:

	DESCRIPTION	PART NUMBER	QUANTITY
A	GEAR SM. 1/4" BORE W/PIN	4153.600.08	1 EA
B	AGITATOR PADDLE	4250.600.01	1 EA

NOTE: 1. THIS ROLLER ASSEMBLY IS USED ONLY IN THE DRYER RACK.
2. SUB-PARTS ARE AVAILABLE SEPARATELY.

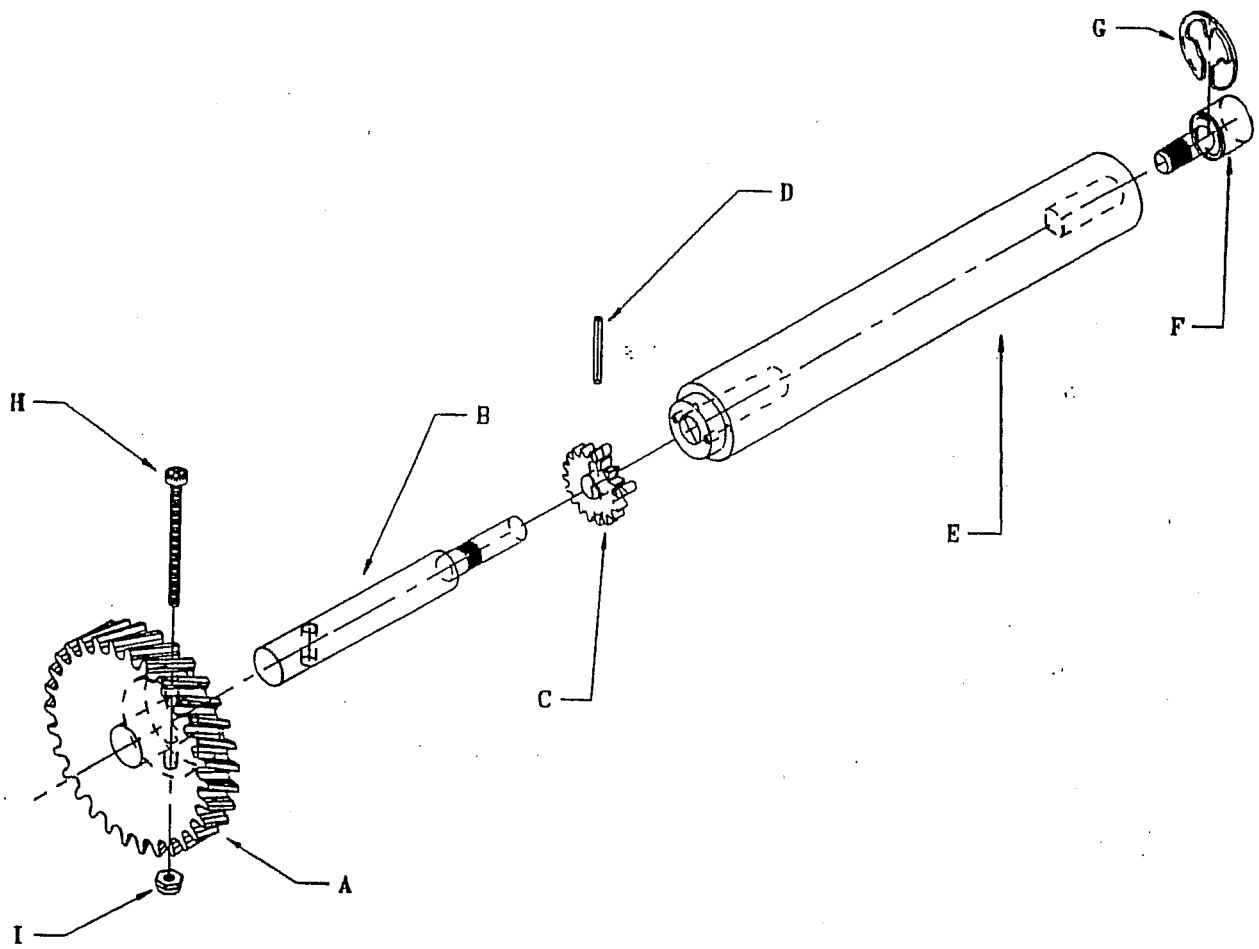

ALPHATEK
CORPORATION

NAME OF PART: DRYER DRIVE ROLLER ASSEMBLY.			PART NUMBER: 5262.600.05
REV # 1	DATE OF REV: 09/16/94	BY: NKS	FOR USE IN: ALL ALPHATEK DRYER RACKS.

LEGEND:

	DESCRIPTION	PART NUMBER	QUANTITY
A	RACK DRIVE GEAR	4153.600.07	1 EA
B	ROLLER PIN - LARGE	4114.600.04	1 EA
C	DEVELOPER DRIVE ROLLER GEAR	4153.600.16	1 EA
D	3/32" X 3/4" HEAVY DUTY SPIROL PIN	125.4061.2005	1 EA
E	DEVELOPER DRIVE ROLLER	4254.600.03	1 EA
F	ROLLER PIN - MEDIUM	4114.600.03	1 EA
G	1/2" RETAINING RING	123.7100.05	1 EA
H	6-32 X 2" PHLPS PH MS	121.0632.3259	1 EA
I	6-32 18-8 LOCKNUT.	122.0632.95	1 EA

NOTE: 1. ENSURE ROLLER IS FREE OF SCRATCHES, NICKS OR DIVOTS.
2. SUB-PARTS ARE AVAILABLE SEPARATELY.

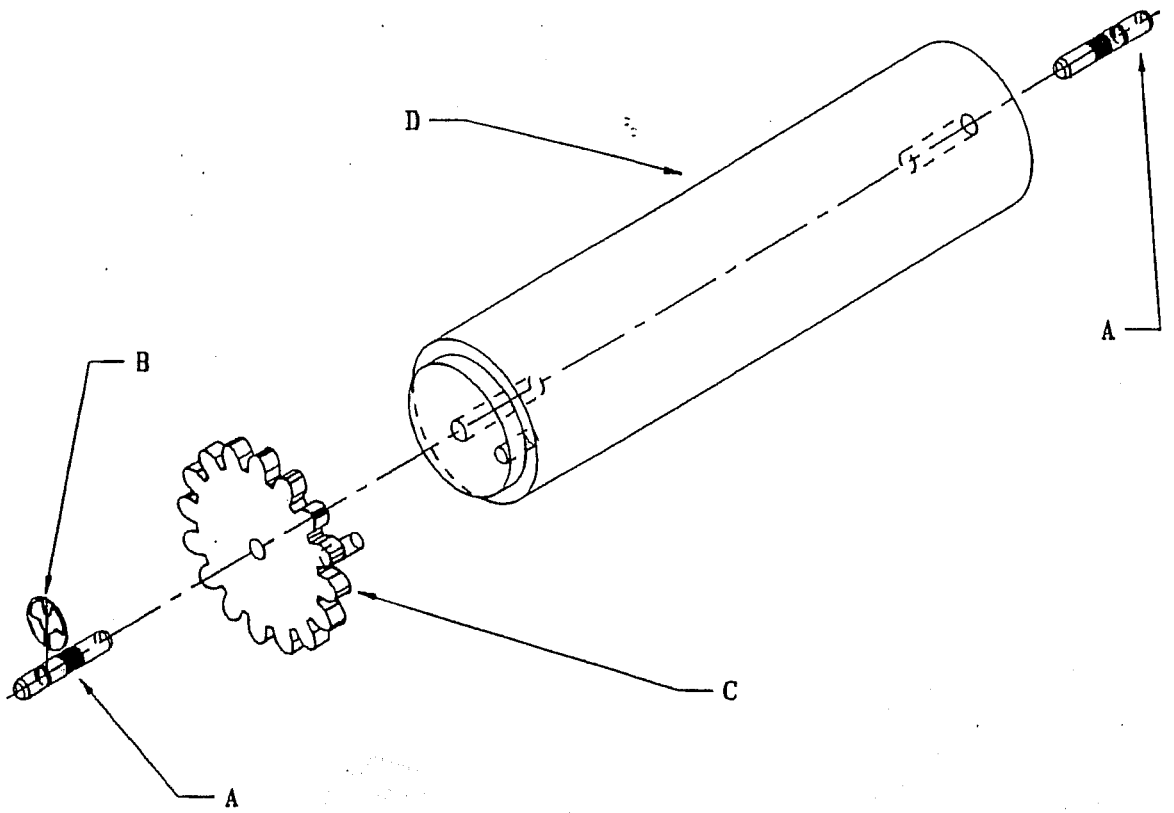

ALPHATEK
CORPORATION

NAME OF PART: LARGE ROLLER ASSEMBLY			PART NUMBER: 5262.600.06
REV # 3	DATE OF REV: 09/20/94	BY: NKS	FOR USE IN: ALL ALPHATEK PROCESSORS.

LEGEND:

	DESCRIPTION	PART NUMBER	QUANTITY
A	ROLLER PIN - SMALL	4114.600.05	2 EA
B	1/4" RETAINING RING	123.7100.0250	1 EA
C	GEAR LARGE 1/4" BORE W/PIN	4153.600.06	1 EA
D	LARGE ROLLER	4254.600.02	1 EA

NOTE: 1. ENSURE ROLLER IS FREE OF SCRATCHES, NICKS OR DIVOTS.
2. SUB-PARTS ARE AVAILABLE SEPARATELY.

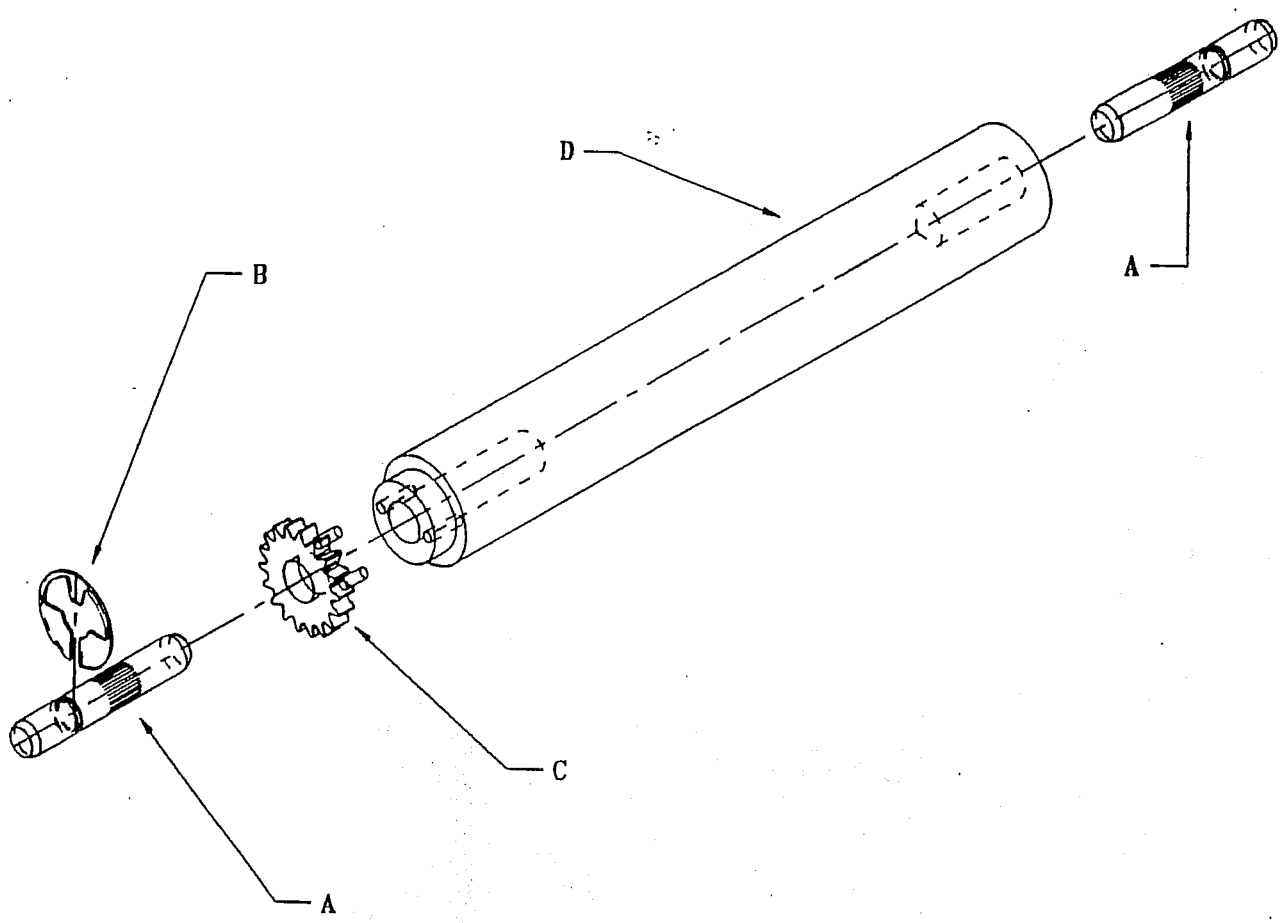

ALPHATEK CORPORATION

NAME OF PART: SMALL ROLLER ASSEMBLY			PART NUMBER: 5262.600.07
REV # 3	DATE OF REV: 09/20/94	BY: NKS	FOR USE IN: ALL ALPHATEK PROCESSORS.

LEGEND:

	DESCRIPTION	PART NUMBER	QUANTITY
A	ROLLER PIN - SMALL	4114.600.05	2 EA
B	1/4" RETAINING RING	123.7100.0250	1 EA
C	GEAR SMALL 1/4" BORE W/PINS	4153.600.08	1 EA
D	SMALL ROLLER	4254.600.01	1 EA

NOTE:- * SCREW FOR STROKE ADJUSTMENT.
1.TO INCREASE CC RATES;TURN SCREW IN CLOCKWISE DIRECTION.
2.TO DECREASE CC RATES;TURN SCREW IN COUNTER CLOCKWISE DIRECTION.

CAUTION:-DO NOT TRY TO ADJUST NUT ON OPPOSITE SIDE OF SCREW.

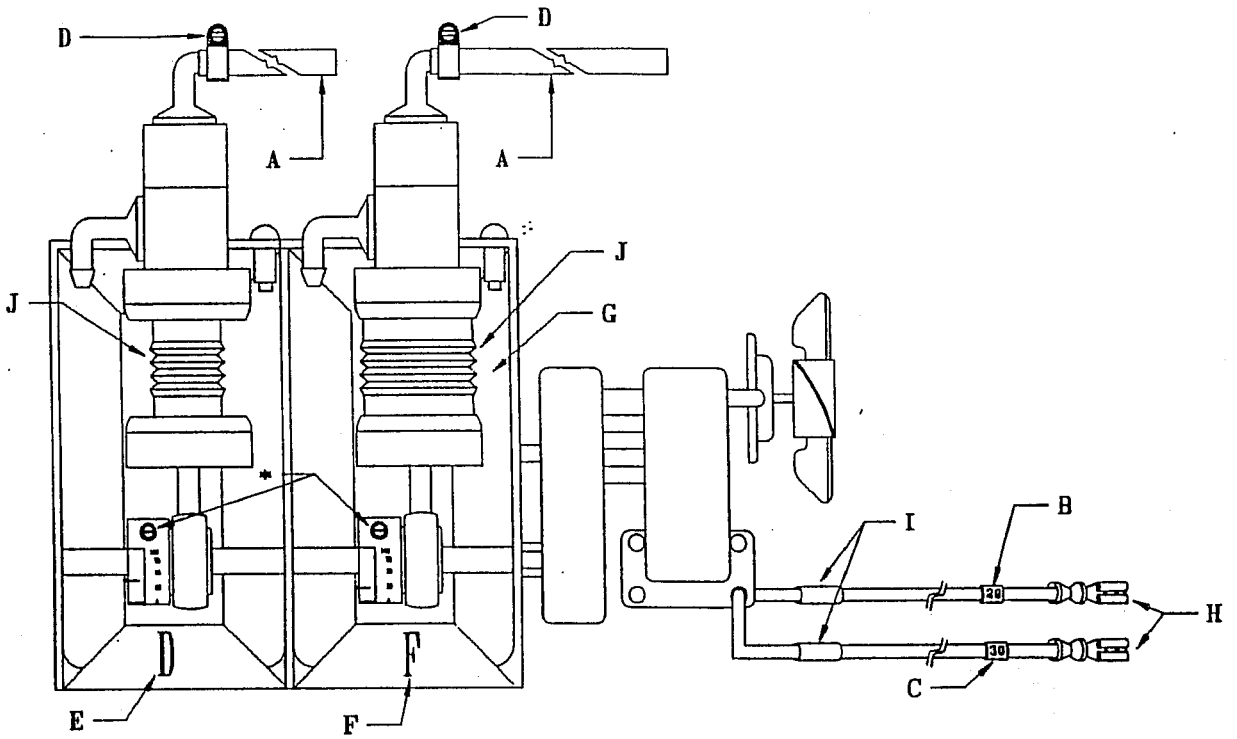

ALPHATEK
CORPORATION

NAME OF PART: AX300 REPLENISHER PUMP ASSEMBLY			PART NUMBER: 5285.300.01
REV # 2	DATE OF REV: 09/21/94	BY: NKS	FOR USE IN: ALL ALPHATEK PROCESSORS

LEGEND:

	DESCRIPTION	PART NUMBER	QUANTITY
A	3/8" ID X 9/16" OD VINYL TUBING	135.3412.09	4 FT
B	#29 VINYL WIRE MARKER	161.3250.29	.01 EA
C	#30 VINYL WIRE MARKER	161.3250.30	.01 EA
D	5/8" STAINLESS STEEL HOSE CLAMP	4139.600.07	8 EA
E	3/4" X 1 1/2" LETTER D	4160.600.01	.01 EA
F	3/4" X 1 1/2" LETTER F	4160.600.02	.01 EA
G	P/D REPLENISHER PUMP	4183.600.09	1 EA
H	22-18 GA INS CRIMP TERMINAL	762.8690	2 EA
I	1/4" D X 1 1/2" L HEAT SHRINK TUBING	135.3324.10	2 EA
* J	REPLENISHER PUMP BELLOWS.	4153.700.05	2 EA
*	MUST SPECIFY DEVELOPER OR FIXER SIDE.		

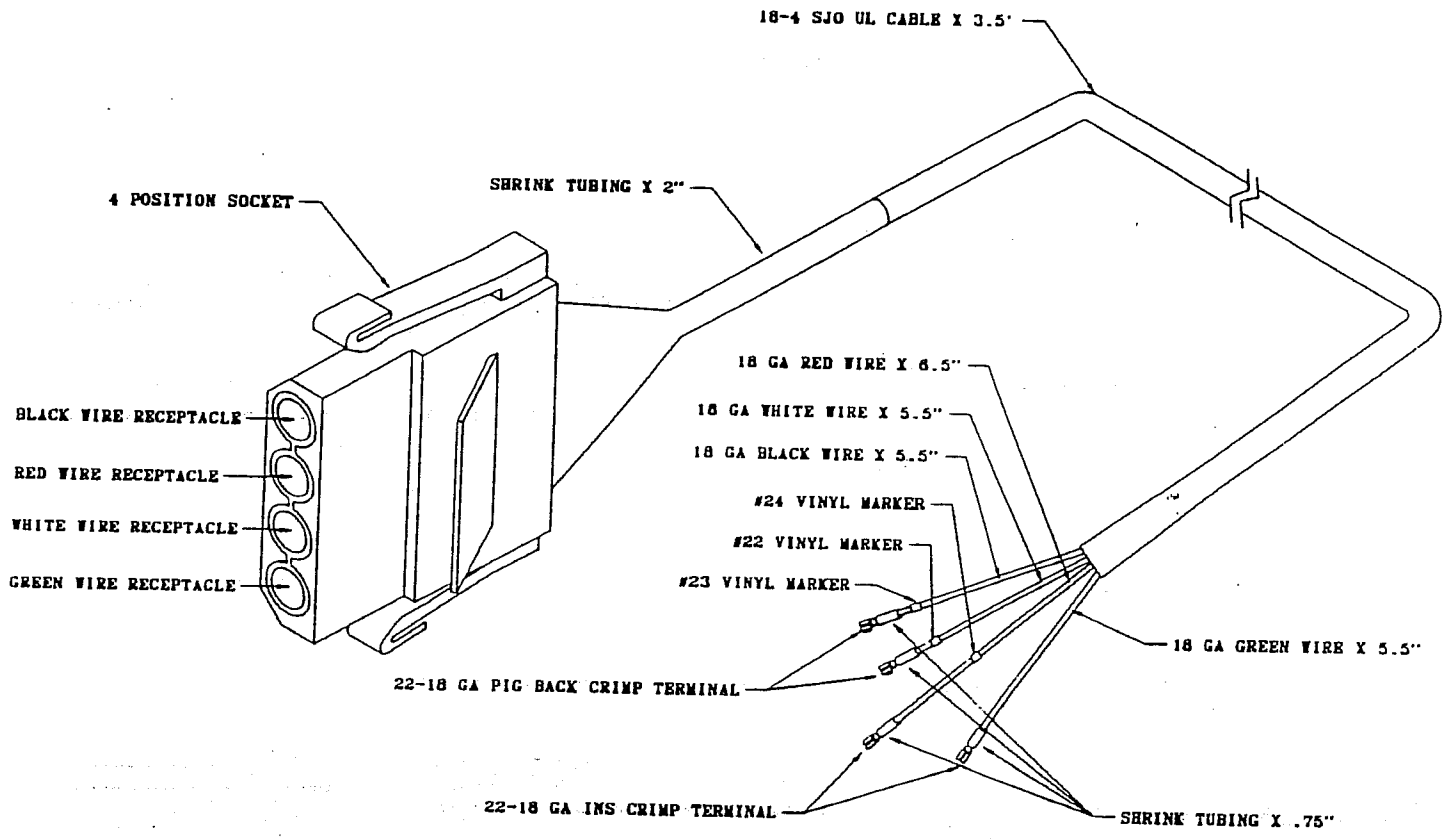

NOTES:
1 CAN BE ORDERED ONLY AS AN ASSEMBLY. NO SUB-PARTS AVAILABLE
2 FOR USE IN AX300, AX390, NANNO 300
3 WIRE LENGTHS INDICATED REFER TO EXPOSED LENGTHS

REV.	DATE	DRG.	APP.			
5	9686	FKC		AX300SE 4 POS. SOCKET HARNESS ASSEMBLY		5285.300.02
6	9593	FKC				
7						
8						
9						
10				MAT:	FINISH:	ALPHATEK CORPORATION
11						

TOLERANCES-UNLESS OTHERWISE SPECIFIED: LENGTH-DECIMALS ±.010" -FRACTIONS ±1/32" DIAMETERS-DECIMALS ±.002" -FRACTIONS ±.006"

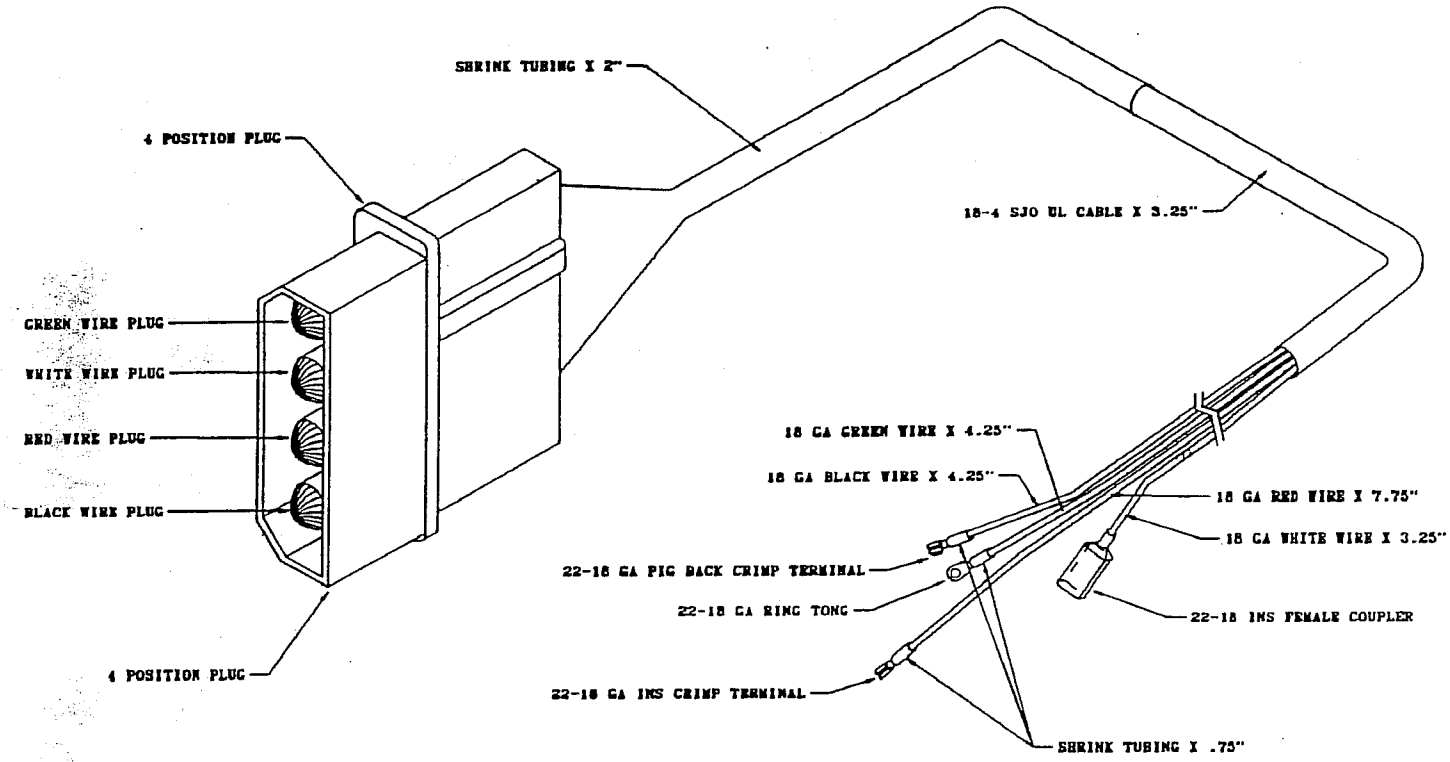

NOTES:
1 CAN BE ORDERED ONLY AS AN ASSEMBLY. NO SUB-PARTS ARE AVAILABLE
2 FOR USE IN AX300, AX390, MAMBO 300
3 WIRE LENGTHS INDICATED REFER TO EXPOSED LENGTHS

REV.	DATE	DRG.	APP.		
5	9586	FKC		AX300SE 4 POS. PLUG HARNESS ASSEMBLY	5285.300.03
6	9593	FKC	OK		
7					
8					
9					
10				MAT: FINISH:	ALPHATEK CORPORATION
11					

TOLERANCES-UNLESS OTHERWISE SPECIFIED: LENGTH-DECIMALS ±.010" -FRACTIONS ±1/32" DIAMETERS-DECIMALS ±.002" -FRACTIONS ±.005"

NOTE:-WHEN SETTING DRYER TEMPERATURE, ALWAYS SET FOR LOWEST POSSIBLE TEMPERATURE WHILE STILL ACHIEVING DRY FILMS.

* - DUE TO A DESIGN CHANGE IT IS IMPORTANT TO GIVE SERIAL NUMBER WHEN ORDERING.

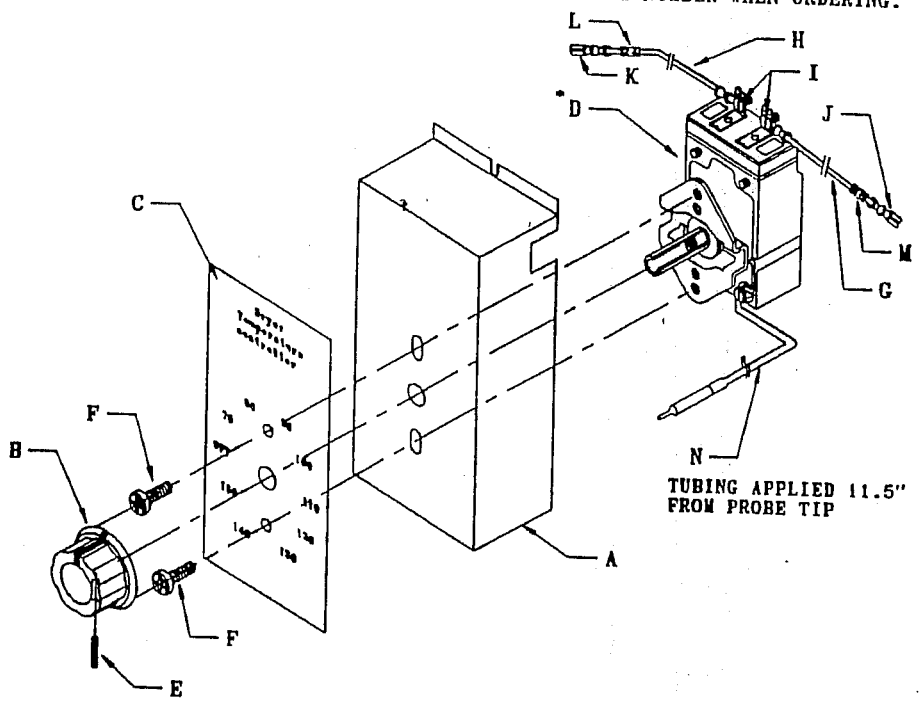

ALPHATEK CORPORATION

NAME OF PART: AX300 DRYER THERMOSTAT ASSEMBLY			PART NUMBER: 5285.300.04
REV # 4	DATE OF REV: 9587	BY: FKC	FOR USE IN: AX300,AX390+MAMMO 300
LEGEND:			

	DESCRIPTION	PART NUMBER	QUANTITY
A	AX300SE DRYER THERMOSTAT HOUSING	4142.300.01	1 EA
B	DRYER CONTROL KNOB	4153.700.01	1 EA
C	AX300SE DRYER THERMOSTAT DECAL	4160.300.01	1 EA
D	DRYER TEMPERATURE CONTROLLER	4188.700.02	1 EA
E	6-32 X 1/2 SOCKET SET SCREW	124.0632.0846	1 EA
F	6-32 X 3/8 PHLPS PAN HD MACH SCREW	121.0632.0659	2 EA
G	16-GA SINGLE CONDUCTOR WHITE WIRE X 10 1/2"	8184.600.05	1 EA
H	16-GA SINGLE CONDUCTOR BLACK WIRE X 13"	8184.600.04	1 EA
I	14-16 GA INS RING TONG	762.8630	2 EA
J	14-16 GA INS CRIMP TERM	762.8620	1 EA
K	14-16 GA INS PIG BACK CRIMP TERM	762.8900	1 EA
L	#24 VINYL WIRE MARKER	161.3250.24	1 EA
M	#28 VINYL WIRE MARKER	161.3250.28	1 EA
N	1/4" HEAT SHRINK TUBING X 4ft	135.3324.10	1 EA

NOTE:-WHEN SETTING POTENTIOMETER TURN POT.IN INCREMENTS.
* -TO INCREASE STANDBY TIME TURN POTENTIOMETER CLOCKWISE.
- TO DECREASE STANDBY TIME TURN POTENTIOMETER COUNTERCLOCKWISE.

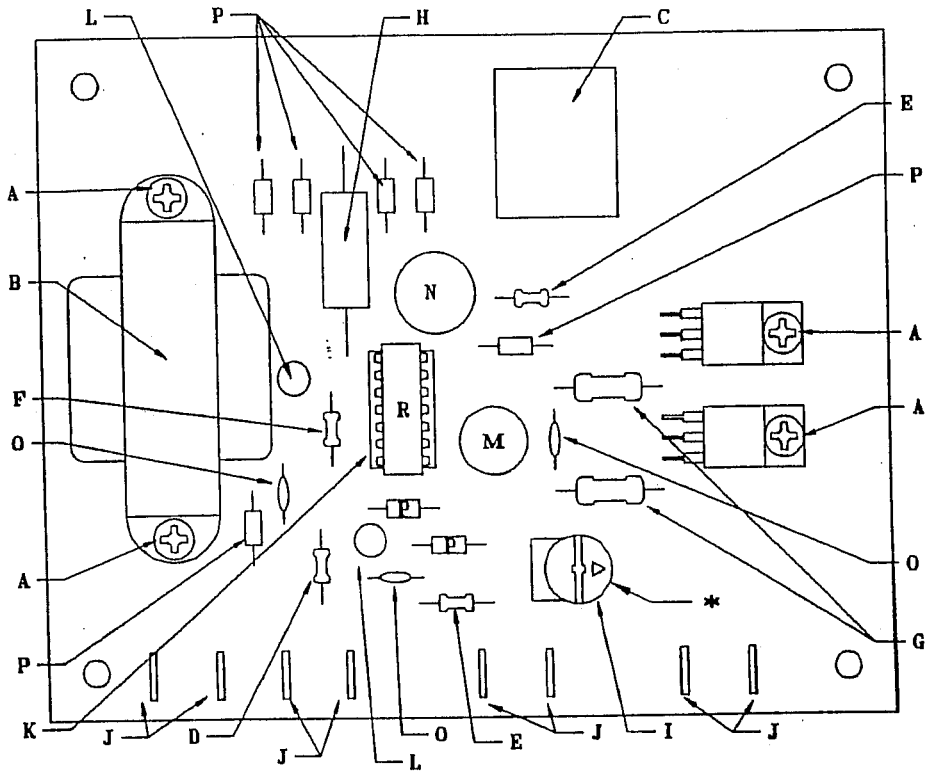

ALPHATEK
CORPORATION

NAME OF PART: 300 AUTO STANDBY P/C ASSEMBLY			PART NUMBER: 5285.300.05
REV # 4	DATE OF REV: 09/28/94	BY: NKS	FOR USE IN: AX300,AX390+WAMMO 300

LEGEND:

	DESCRIPTION	PART NUMBER	QUANTITY
A	6-32 X 3/8" PHILLIPS PAN HEAD MECH SCREW	121.0632.0659	4 EA
B	117V/12V 300 MA TRANSFORMER	701.7000.10	1 EA
C	DPDT 120VDC RELAY	714.2271.23	1 EA
D	1K OHM 1/4 WATT 5% RESISTOR	751.1256.51	1 EA
E	4.7 OHM 1/4 WATT 5% RESISTOR	751.1256.5470	2 EA
F	300 OHM 1/4 WATT 5% RESISTOR	751.1256.73	1 EA
G	180 OHM 1 WATT RESISTOR	751.2106.4180	2 EA
H	10 OHM 2 WATT 5% RESISTOR	751.2206.31	1 EA
I	2.0 M OHM POTENTIOMETER	754.1506.82	1 EA
J	.250 TAB TERMINAL	762.8711.0001	8 EA
K	LOW PROFILE I C SOCKET 14 PIN	764.0214.10	1 EA
L	22 MFD 25 VDC CAPACITOR	771.5622.0325	2 EA
M	220 MFD 25 VDC CAPACITOR	771.5722.0325	1 EA
N	1000 VDC 25VDC CAPACITOR	771.5810.0325	1 EA
O	.01 MFD 50 VDC CAPACITOR	776.1310.0325	3 EA
P	400 VOLT 1 AMP RECTIFIER	781.3105.4004	8 EA
Q	200 VOLT 8 AMP TRIAC	784.3085.2040	2 EA
R	I C DUAL TIMER	788.1103.5562	1 EA

CAUTION: 240 VOLT ONLY.

NOTE:-WHEN SETTING POTENTIOMETER TURN POT.IN INCREMENTS.
- -TO INCREASE STANDBY TIME TURN POTENTIOMETER CLOCKWISE.
- TO DECREASE STANDBY TIME TURN POTENTIOMETER COUNTERCLOCKWISE.

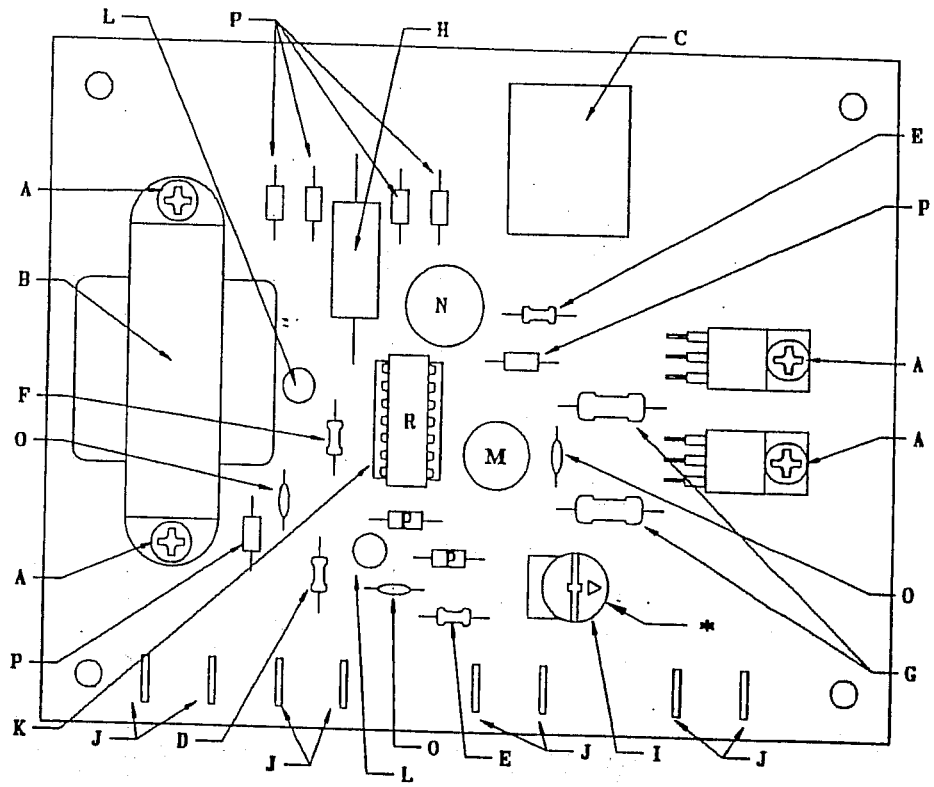

ALPHATEK CORPORATION

NAME OF PART: 240 VOLT AX300 STANDBY BOARD ASSEMBLY			PART NUMBER: 5285.300.07
REV #0	DATE OF REV: 02/22/95	BY: NKS	FOR USE IN: ALL 240 VOLT 300 SERIES PROCESSORS.

LEGEND:

	DESCRIPTION	PART NUMBER	QUANTITY
A	6-32 X 3/8" PHILLIPS PAN HEAD MECH SCREW	1210.632.0659	4 EA
B	220VOLT/12VOLT 350 MA TRANSFORMER	7017.000.11	1 EA
C	DPDT 240 VOLT RELAY	7142.271.24	1 EA
D	1K OHM 1/4 WATT 5% RESISTOR	7511.256.51	1 EA
E	4.7 OHM 1/4 WATT 5% RESISTOR	7511.256.5470	2 EA
F	300 OHM 1/4 WATT 5% RESISTOR	7511.256.73	1 EA
G	180 OHM 1 WATT RESISTOR	7512.106.4180	2 EA
H	10 OHM 2 WATT 5% RESISTOR	7512.206.31	1 EA
I	2.0 M OHM POTENTIOMETER	7541.508.82	1 EA
J	.250 TAB TERMINAL	7628.711.0001	8 EA
K	LOW PROFILE I C SOCKET 14 PIN	7640.214.10	1 EA
L	22 MFD 25 VDC CAPACITOR	7715.622.0325	2 EA
M	220 MFD 25 VDC CAPACITOR	7715.722.0325	1 EA
N	1000 VDC 25VDC CAPACITOR	7715.810.0325	1 EA
O	.01 MFD 50 VDC CAPACITOR	7716.310.0325	3 EA
P	400 VOLT 1 AMP RECTIFIER	7813.105.4004	8 EA
Q	600 VOLT 8AMP TRIAC	7843.085.60	2 EA
R	I C DUAL TIMER	7861.103.5562	1 EA

CAUTION: 240 VOLT ONLY.

NOTE:-WHEN SETTING DEVELOPER TEMPERATURE,TURN POT IN 1/4 TURN INCREMENTS.
* -TO INCREASE DEVELOPER TEMPERATURE TURN POTENTIOMETER CLOCKWISE.
-TO DECREASE DEVELOPER TEMPERATURE TURN POTENTIOMETER COUNTERCLOCKWISE.

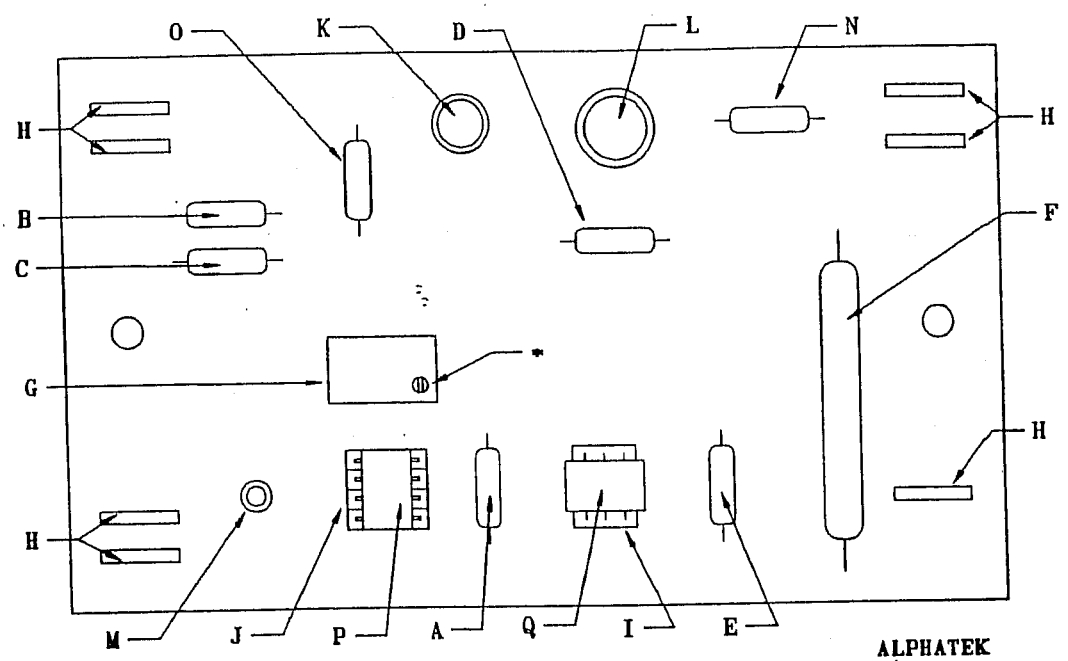

ALPHATEK CORPORATION

NAME OF PART: 240 VOLT AX300 DEVELOPER BOARD ASSEMBLY			PART NUMBER: 5285.300.08
REV # 0	DATE OF REV: 02/22/95	BY: NKS	FOR USE IN: ALL 240 VOLT 300 SERIES PROCESSORS.

LEGEND:

	DESCRIPTION	PART NUMBER	QUANTITY
A	560 OHM 1/4 WATT 5% RESISTOR	7511.256.4560	1 EA
B	2.2K OHM 1/4 5% RESISTOR	7511.256.5220	1 EA
C	10K OHM 1/4 WATT 5% RESISTOR	7511.256.61	1 EA
D	100 OHM 1/2 WATT 5% RESISTOR	7511.506.41	1 EA
E	270 OHM 1/2 WATT 5% RESISTOR	7511.506.4270	1 EA
F	5K OHM 5 WATT 1% RESISTOR	7512.506.1010	1 EA
G	10K MULTI-TURN TRIM POT	7541.056.1011	1 EA
H	.250 TAB TERMINAL	7628.711.0001	7 EA
I	LOW PROFILE IC SOCKET 6 PIN	7640.214.06	1 EA
J	LOW PROFILE IC SOCKET 8 PIN	7640.214.08	1 EA
K	22 MFD 50 VDC CAPACITOR	7715.622.0350	1 EA
L	100 MFD 50 VDC CAPACITOR	7715.710.0350	1 EA
M	.1 MFD 50 VDC CAPACITOR	7761.210.0325	1 EA
N	IN4005 1A 600V SILICON RECTIFIER	7821.040.05	1 EA
O	7.5 VOLT ZENER DIOD	7833.603.1040	1 EA
P	LM311P PRECISION COMPARATOR	7861.102.3112	1 EA
Q	3040 OPTO COUPLED TRIAC DRIVER 400V ZVS	7869.109.5159	1 EA

NOTE:-WHEN SETTING DEVELOPER TEMPERATURE,TURN POT IN 1/4 TURN INCREMENTS.
* -TO INCREASE DEVELOPER TEMPERATURE TURN POTENTIOMETER CLOCKWISE.
-TO DECREASE DEVELOPER TEMPERATURE TURN POTENTIOMETER COUNTERCLOCKWISE.

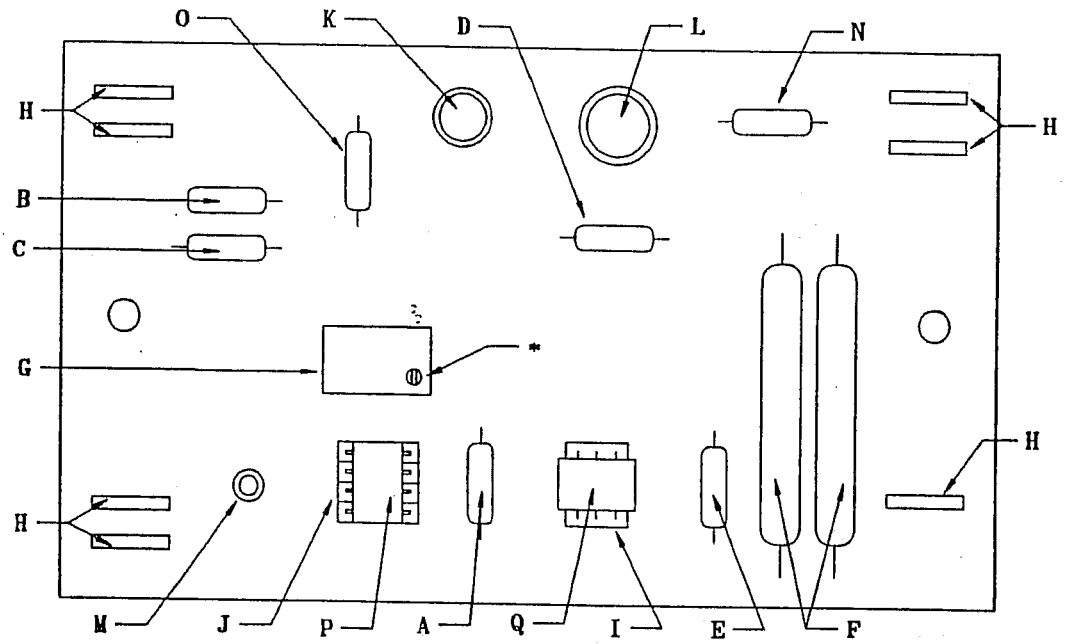

ALPHATEK
CORPORATION

NAME OF PART: P/C DEV. CONTROL ASSEMBLY.			PART NUMBER: 5285.700.14
REV # 3	DATE OF REV: 09/29/94	BY: NKS	FOR USE IN: AX300.AX390 MAMMO 300.AX700

LEGEND:

	DESCRIPTION	PART NUMBER	QUANTITY
A	560 OHM 1/4 WATT 5% RESISTOR	751.1256.4560	1 EA
B	2.2K OHM 1/4 5% RESISTOR	751.1256.5220	1 EA
C	10K OHM 1/4 WATT 5% RESISTOR	751.1256.61	1 EA
D	100 OHM 1/2 WATT 5% RESISTOR	751.1506.41	1 EA
E	270 OHM 1/2 WATT 5% RESISTOR	751.1506.4270	1 EA
F	5K OHM 5 WATT 1% RESISTOR	751.2506.55	2 EA
G	10K MULTI-TURN TRIM POT	754.1056.1011	1 EA
H	.250 TAB TERMINAL	762.8711.0001	7 EA
I	LOW PROFILE IC SOCKET 6 PIN	764.0214.06	1 EA
J	LOW PROFILE IC SOCKET 8 PIN	764.0214.08	1 EA
K	22 MFD 50 VDC CAPACITOR	771.5622.0350	1 EA
L	100 MFD 50 VDC CAPACITOR	771.5710.0350	1 EA
M	.1 MFD 50 VDC CAPACITOR	776.1210.0325	1 EA
N	IN4005 1A 600V SILICON RECTIFIER	782.1040.05	1 EA
O	7.5 VOLT ZENER DIOD	783.3603.1040	1 EA
P	LM311P PRECISION COMPARATOR	786.1102.3112	1 EA
Q	3040 OPTO COUPLED TRIAC DRIVER 400V ZVS	786.9109.5159	1 EA

NOTE:- NO SUB PARTS AVAILABLE. MUST ORDER WHOLE PUMP.

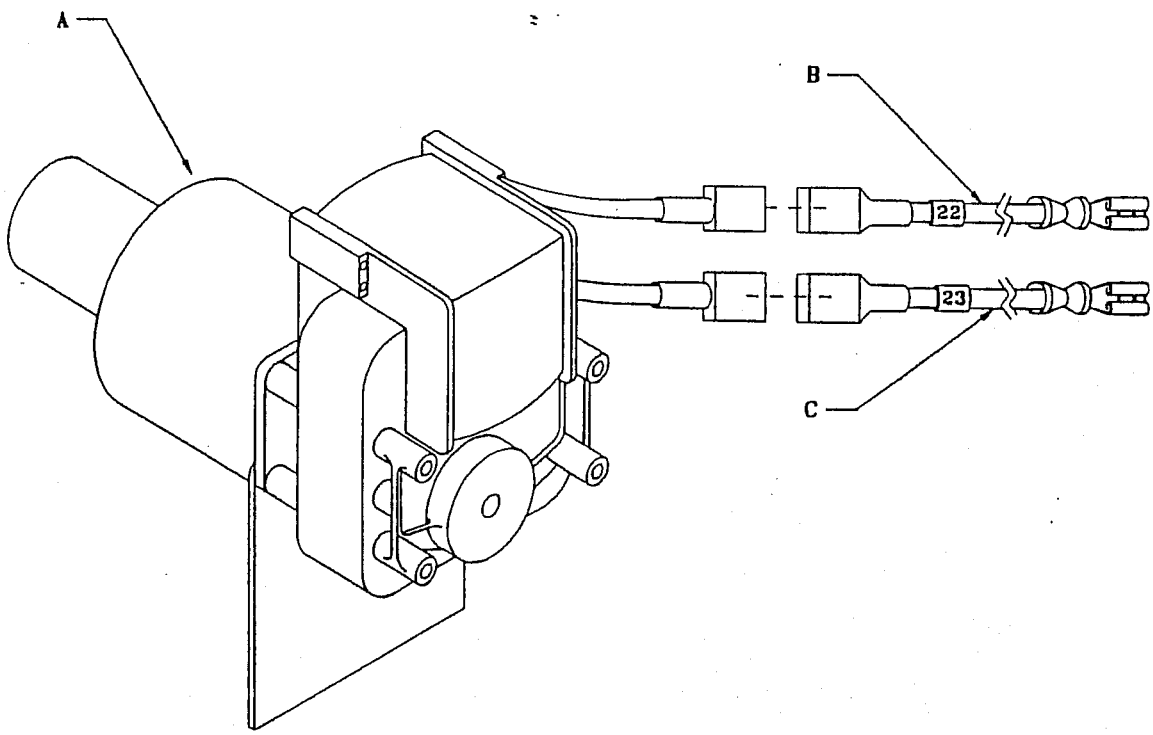

ALPHATEK
CORPORATION

NAME OF PART: RECIRCULATION PUMP ASSEMBLY			PART NUMBER: 5285.350.04
REV # 4	DATE OF REV: 9588	BY: FKC GK	FOR USE IN: AX300, AX390+MAMMO 300

LEGEND:

	DESCRIPTION	PART NUMBER	QUANTITY
A	RECIRCULATION PUMP	4183.700.01	1 EA
B	RECIRCULATION PUMP (WHITE) WIRE ASSEMBLY	5185.350.44	1 EA
C	RECIRCULATION PUMP (BLACK) WIRE ASSEMBLY	5185.350.45	1 EA

NOTE:-WHEN MOUNTING MOTOR TO BRACKET ENSURE MOTOR IS SQUARE TO BRACKET.
IF MOTOR IS MISALIGNED TO BRACKET POSSIBLE GEAR/CHAIN DETERIORATION MAY OCCUR.
DUE TO CHANGES IN SUPPORT BRACKET DESIGN, BRACKET CANNOT BE USED IN PROCESSORS MANUFACTURED BEFORE 1990.
SUB-PARTS MAY BE ORDERED SEPARATELY.

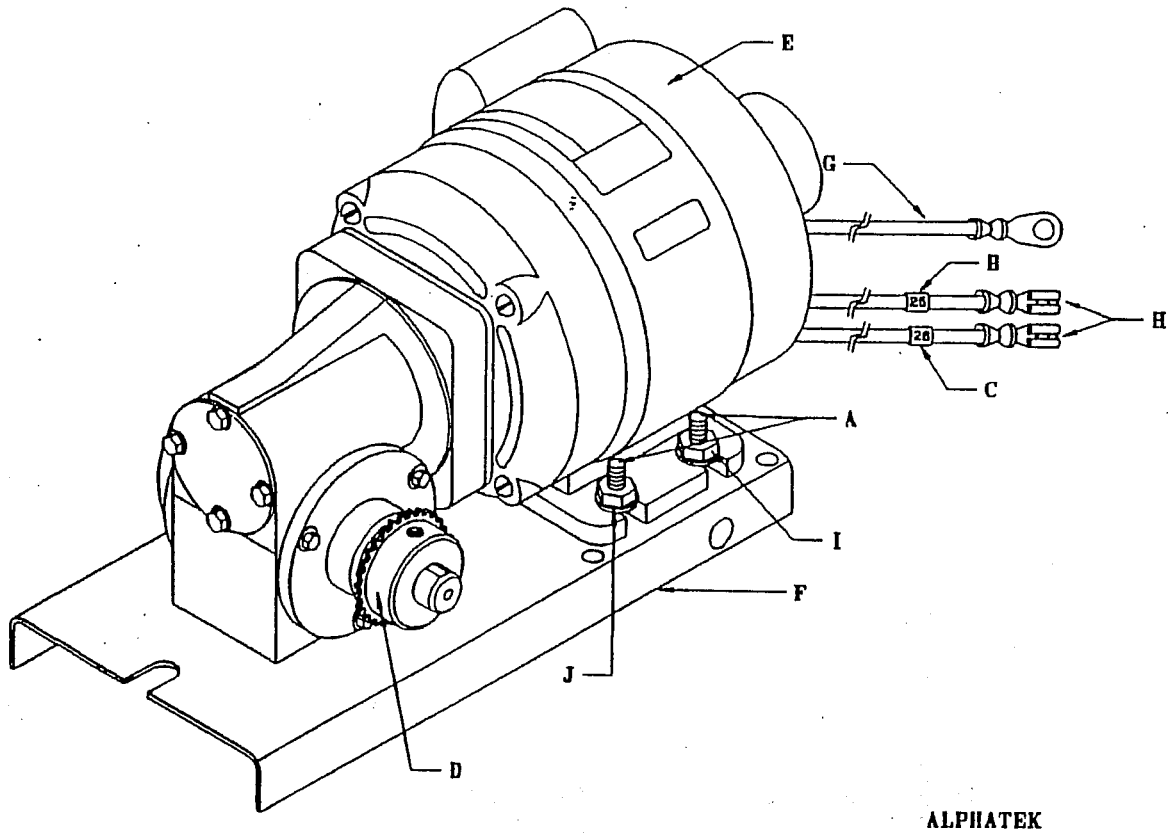

ALPHATEK
CORPORATION

NAME OF PART: MAIN MOTOR ASSEMBLY			PART NUMBER: 5485.300.05
REV #5	DATE OF REV: 9591	BY: FKC	FOR USE IN: AX390SE ONLY

LEGEND:

	DESCRIPTION	PART NUMBER	QUANTITY
A	1/4-20 X 1 HEX HEAD BOLT	127.4042.0084	4 EA
B	#25 VINYL WIRE MARKER	161.3250.25	1 EA
C	#26 VINYL WIRE MARKER	161.3250.26	1 EA
D	300/390 MOTOR SPROCKET.	4133.600.02	1 EA
E	NCI33R CAPACITOR GEARMOTOR	4183.600.06	1 EA
F	'95 MAIN MOTOR SUPPORT BRACKET	4241.700.28	1 EA
G	MAIN MOTOR GROUND WIRE ASSEMBLY	5165.700.19	1 EA
H	22-18 GA INS CRIMP TERMINAL	762.8690	2 EA
I	1/4-20 JAM NUT	122.1420.9500	4 EA
J	1/4 SPLIT LOCK WASHER	123.4142.10	4 EA

NOTE:-WHEN MOUNTING MOTOR TO BRACKET ENSURE MOTOR IS SQUARE TO BRACKET.
IF MOTOR IS MISALIGNED TO BRACKET POSSIBLE GEAR/CHAIN DETERIORATION MAY OCCUR.
DUE TO CHANGES IN SUPPORT BRACKET DESIGN, BRACKET CANNOT BE USED IN PROCESSORS MANUFACTURED BEFORE 1990.
SUB-PARTS MAY BE ORDERED SEPARATELY.

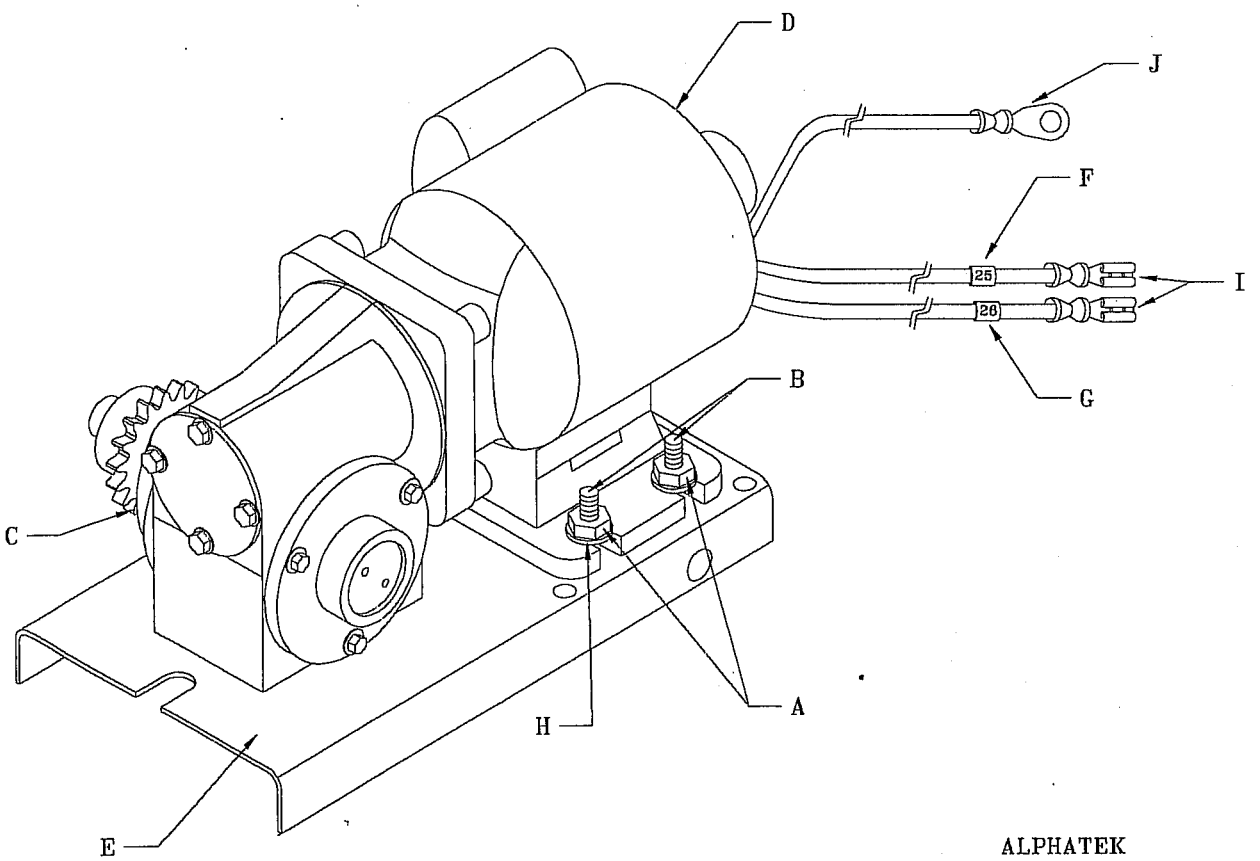

ALPHATEK
CORPORATION

NAME OF PART: MAIN MOTOR ASSEMBLY		PART NUMBER: 5485.350.01
REV # 13 DATE OF REV: 0370	BY: WJF	FOR USE IN: AX300+MAMMO

LEGEND:

	DESCRIPTION	PART NUMBER	QUANTITY
A	1/4-20 JAM NUT	122.1420.9500	4 EA
B	1/4-20 X 1" HEX HEAD BOLT	127.4042.0084	4 EA
C	MOTOR SPROCKET 26T 1/2	4133.300.08	1 EA
D	AX300 MAIN MOTOR	4183.300.01	1 EA
E	'95 MAIN MOTOR SUPPORT BRACKET	4241.700.28	1 EA
F	#25 VINYL WIRE MARKER	161.3250.25	1 EA
G	#26 VINYL WIRE MARKER	161.3250.26	1 EA
H	1/4 SPLIT LOCK WASHER	123.4142.10	4 EA
I	22-18 GA INS CRIMP TERMINAL	762.8690	2 EA
J	MAIN MOTOR GROUND WIRE ASSEMBLY	5185.700.19	1 EA

CAUTION: 240 VOLT ONLY.

NOTE:-WHEN MOUNTING MOTOR TO BRACKET ENSURE MOTOR IS SQUARE TO BRACKET.
IF MOTOR IS MISALIGNED TO BRACKET POSSIBLE GEAR/CHAIN DETERIORATION MAY OCCUR.
DUE TO CHANGES IN SUPPORT BRACKET DESIGN, BRACKET CANNOT BE USED IN PROCESSORS MANUFACTURED BEFORE 1990.
SUB-PARTS MAY BE ORDERED SEPARATELY.

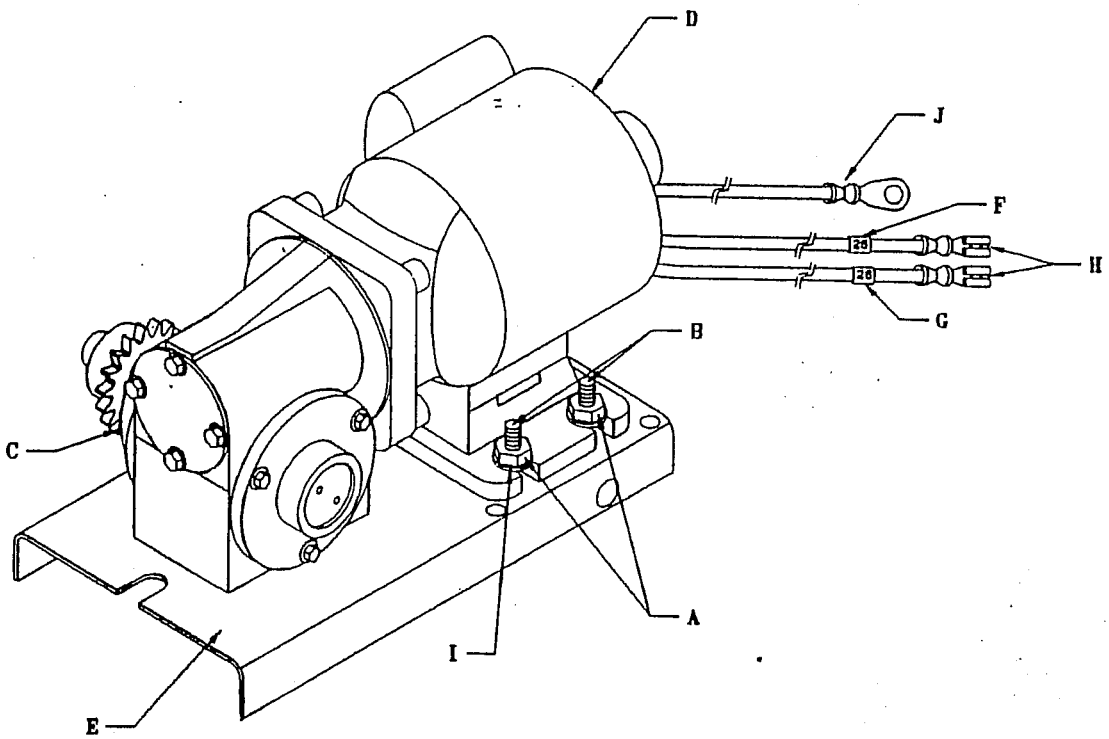

ALPHATEK
CORPORATION

NAME OF PART: 240 VOLT AX300 MOTOR ASSEMBLY			PART NUMBER: 5485.300.09
REV # 4	DATE OF REV: 9591	BY: FKC	FOR USE IN: AX300SE + MAMMO 300 240 VOLT ONLY

LEGEND:

	DESCRIPTION	PART NUMBER	QUANTITY
A	1/4-20 JAM NUT	1221.420.9500	4 EA
B	1/4-20 X 5/8" HEX HEAD BOLT	1274.042.0054	4 EA
C	MOTOR SPROCKET 19T 1/2	4133.600.02	1 EA
D	240 VOLT NCI 12RH CAPACITOR MOTOR	4183.300.01	1 EA
E	'95 MAIN MOTOR SUPPORT BRACKET	4241.700.28	1 EA
F	#25 VINYL WIRE MARKER	1613.250.25	1 EA
G	#26 VINYL MARKER	1613.250.26	1 EA
H	22-18 GA INS CRIMP TERMINAL	7628.690	2 EA
I	1/4 SPLIT LOCK WASHER	123.4142.10	4 EA
J	MAIN MOTOR GROUND WIRE ASSEMBLY	5185.700.19	1 EA

CAUTION: 240 VOLT ONLY.

NOTE:-WHEN MOUNTING MOTOR TO BRACKET ENSURE MOTOR IS SQUARE TO BRACKET.
IF MOTOR IS MISALIGNED TO BRACKET POSSIBLE GEAR/CHAIN DETERIORATION MAY OCCUR.
DUE TO CHANGES IN SUPPORT BRACKET DESIGN, BRACKET CANNOT BE USED IN PROCESSORS MANUFACTURED BEFORE 1990.
SUB-PARTS MAY BE ORDERED SEPARATELY.

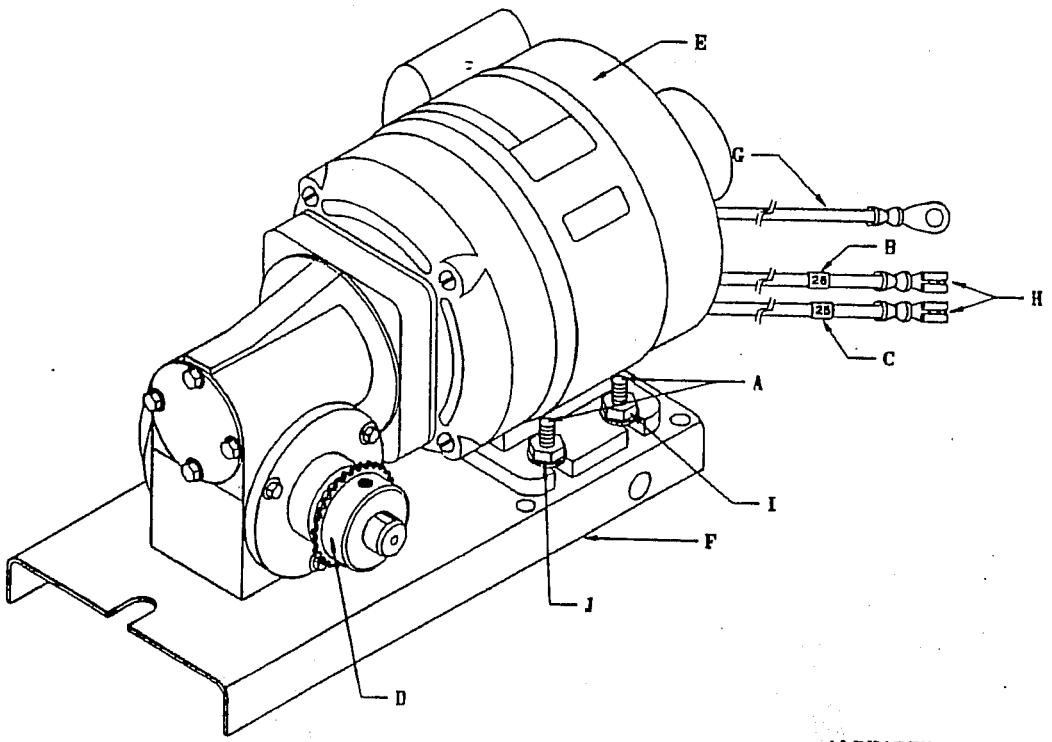

ALPHATEK
CORPORATION

NAME OF PART: 240 VOLT AX390 MAIN MOTOR ASSEMBLY			PART NUMBER: 5485.390.01
REV # 3	DATE OF REV: 9587	BY: FKC	FOR USE IN: 240V AX390SE ONLY

LEGEND:

	DESCRIPTION	PART NUMBER	QUANTITY
A	1/4-20 X 5/8 HEX HEAD BOLT	1274.042.0054	4 EA
B	#26 VINYL WIRE MARKER	1613.250.26	1 EA
C	#25 VINYL WIRE MARKER	1613.250.25	1 EA
D	300/390 MOTOR SPROCKET 19T 1/2	4133.600.02	1 EA
E	240 VOLT NCI33R CAPACITOR GEARMOTOR	4183.700.13	1 EA
F	'95 MAIN MOTOR SUPPORT BRACKET	4241.700.28	1 EA
G	MAIN MOTOR GROUND WIRE ASSEMBLY	5185.700.19	1 EA
H	22-18 GA INS CRIMP TERMINAL	7628.690	2 EA
I	1/4-20 JAM NUT	1221.420.9500	4 EA
J	1/4 SPLIT LOCK WASHER	123.4142.10	4 EA

NOTE: SUB PARTS CAN BE ORDERED SEPARATELY.

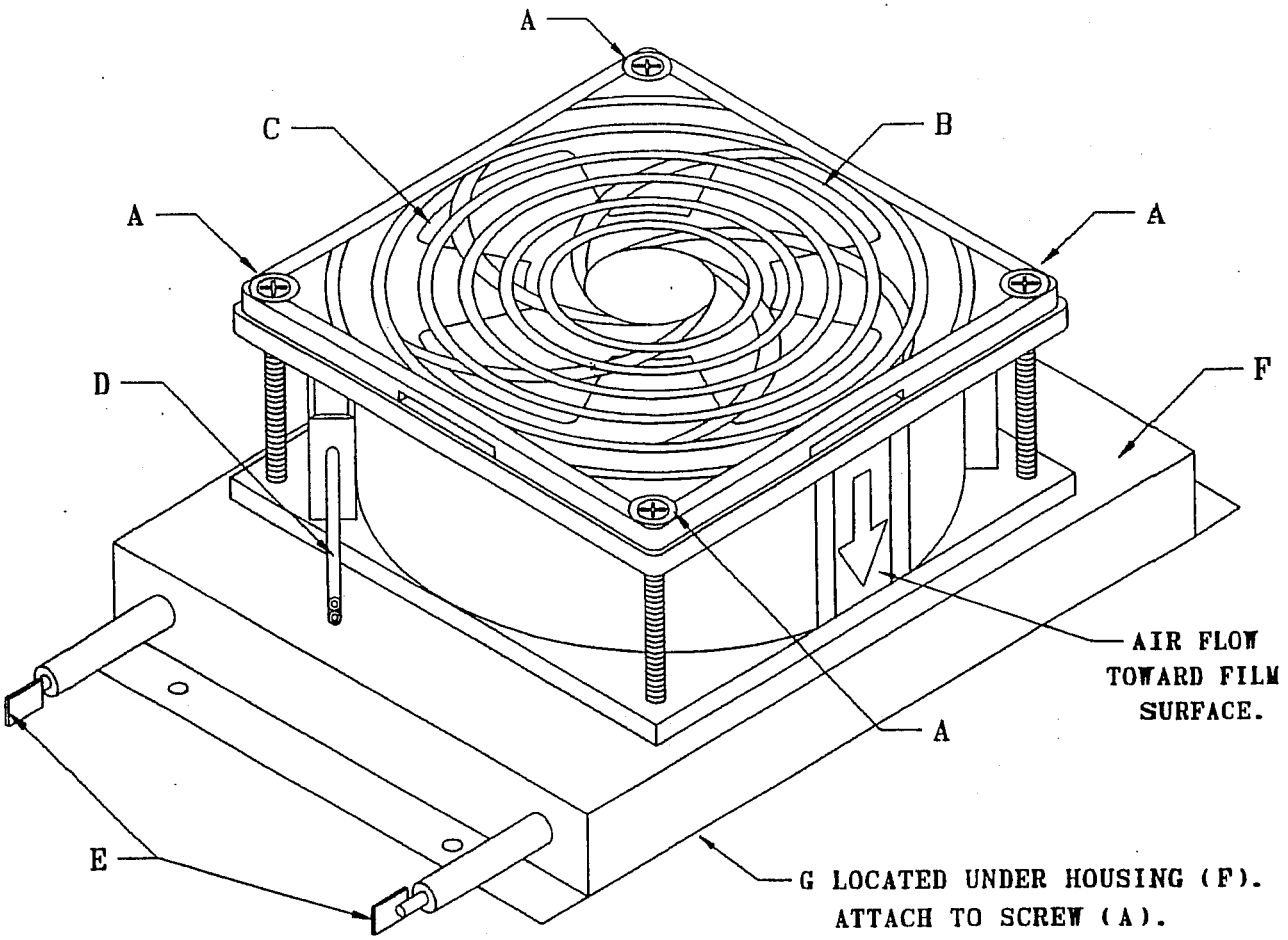

ALPHATEK
CORPORATION

NAME OF PART: AX300SE MUFFIN FAN HOUSING ASSEMBLY			PART NUMBER: 5485.300.04
REV # 3	DATE OF REV: 09/30/94	BY: NKS	FOR USE IN: AX300 UPPER+LOWER AX390 LOWER ONLY

LEGEND:

	DESCRIPTION	PART NUMBER	QUANTITY
A	6-32 X 2" PHILLIPS PAN HEAD MACH SCREW	121.0632.3259	4 EA
B	MUFFIN FAN FINGER GUARD (PLASTIC)	4138.350.01	4 EA
C	MUFFIN FAN	4183.600.03	1 EA
D	MUFFIN FAN CORD	4184.600.01	1 EA
E	400 WATT CALROD (M-SHAPED)	4187.350.04	1 EA
F	AX300SE MUFFIN FAN HOUSING (*)	4447.300.01	1 EA
G	6-32 18-8 LOCKNUT	122.0632.95	4 EA

* - DUE TO DESIGN CHANGES A SERIAL NUMBER MUST ACCOMPANY ANY ORDER TO ENSURE PROPER REPLACEMENT.

NOTE: 1.-SUB-PARTS CAN BE ORDERED SEPARATELY.
2.-DUE TO CHANGES IN DESIGN A SERIAL NUMBER MUST ACCOMPANY ANY ORDER TO ENSURE PROPER REPLACEMENT.

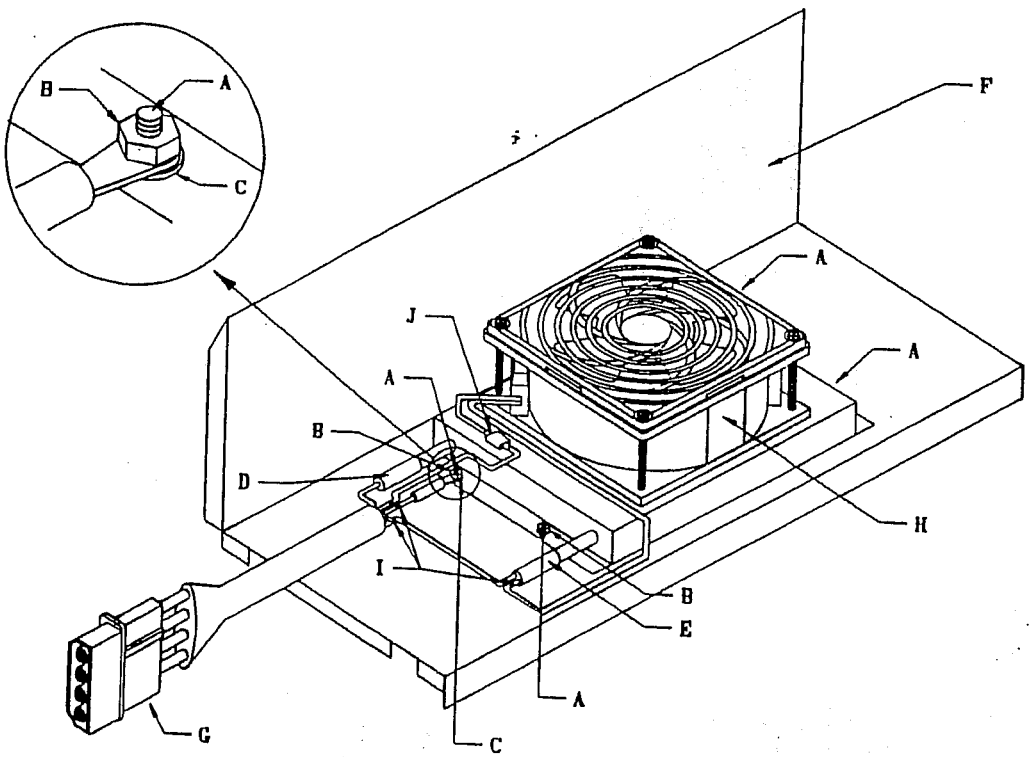

ALPHATEK CORPORATION

NAME OF PART: AX300SE BLOWER BOX LID ASSEMBLY			PART NUMBER: 5536.300.01
REV # 15	DATE OF REV: 9591	BY: FKC	FOR USE IN: AX300SE ONLY

LEGEND:

	DESCRIPTION	PART NUMBER	QUANTITY
A	6-32 X 3/8" PHILIPS PAN HEAD MACH SCREW	121.0632.0659	4 EA
B	6-32 18-8 LOCKNUT	122.0632.95	4 EA
C	#6 INTERNAL LOCKWASHER (FOR GROUND WIRE)	123.6060.10	1 EA
D	1/4" HEAT SHRINK TUBING	135.3324.10	.25 FT
E	1/2" HEAT SHRINK TUBING	135.3328.10	.25 FT
F	AX300SE BLOWER BOX LID	4442.300.01	1 EA
G	AX300SE 4 POSITION PLUG HARNESS ASSEMBLY	5285.300.03	1 EA
H	UPPER MUFFIN FAN HOUSING ASSEMBLY	5485.300.04	1 EA
I	PANDUIT NYLON STRAP-SMALL	4150.600.14	3 EA
J	14-16 GA INS FEMALE COUPLER	762.8650	1 EA

NOTE: SUB-PARTS MAY BE ORDERED SEPARATELY.

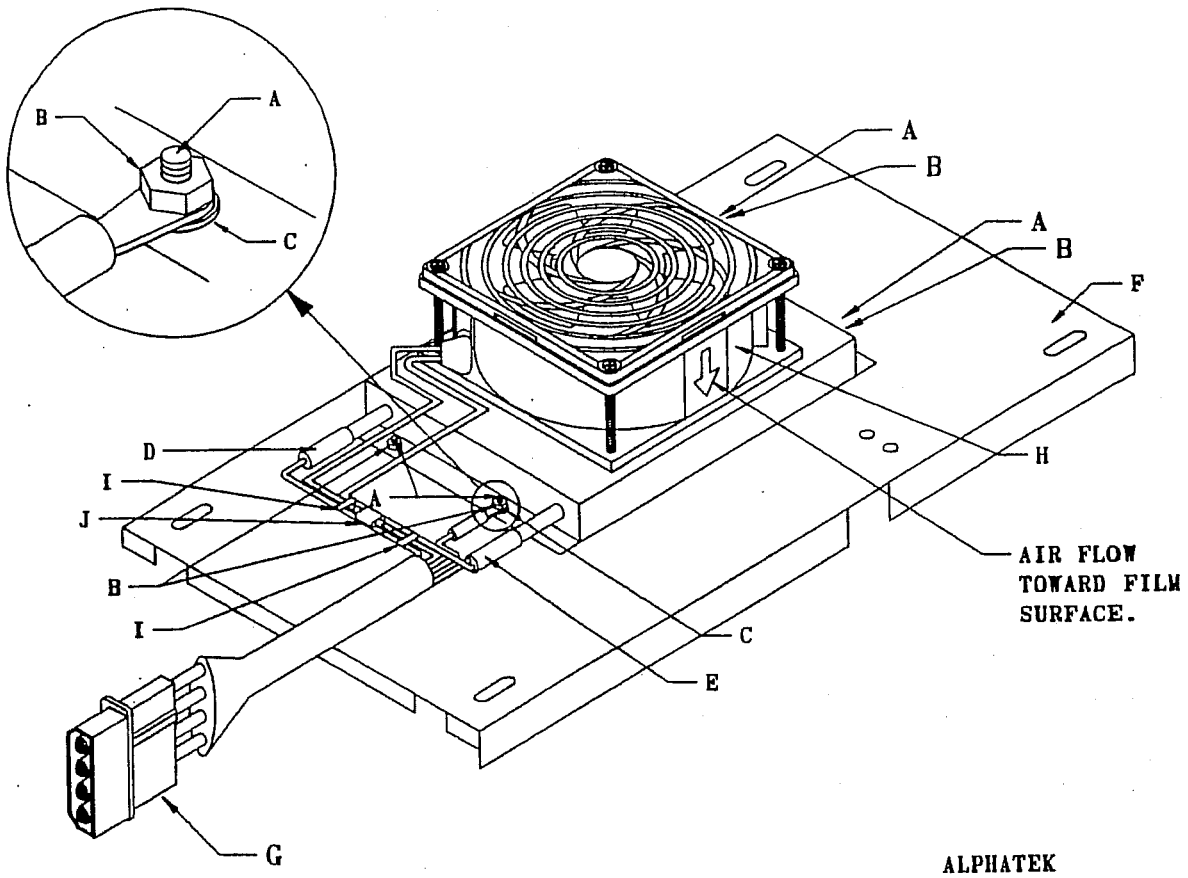

ALPHATEK
CORPORATION

NAME OF PART: AX300SE BLOWER BOX ASSEMBLY			PART NUMBER: 5536.300.02
REV # 13	DATE OF REV: 9596	BY: FKC	FOR USE IN: AX300+AX390SE

LEGEND:

	DESCRIPTION	PART NUMBER	QUANTITY
A	6-32 X 3/8" PHILIPS PAN HEAD MACH SCREW	121.0632.0659	4 EA
B	6-32 18-8 LOCKNUT	122.0632.95	4 EA
C	#6 INTERNAL LOCKWASHER	123.6060.10	1 EA
D	1/4" HEAT SHRINK TUBING	135.3324.10	.25 FT
E	1/2" HEAT SHRINK TUBING	135.3328.10	.25 FT
F	AX300SE BLOWER BOX	4442.300.02	1 EA
G	AX300SE 4 POSITION PLUG HARNESS ASSEMBLY	5285.300.03	1 EA
H	LOWER MUFFIN FAN HOUSING ASSEMBLY	5485.300.03	1 EA
I	PANDUIT NYLON STRAP-SMALL	4150.600.14	2 EA
J	14-16 GA INS FEMALE COUPLER	762.8650	1 EA

NOTE: BEFORE INSERTING HEATER, WRAP THREADS WITH 3 REVOLUTIONS OF TEFLON TAPE AND ALSO APPLY SILICONE TO THREADS.

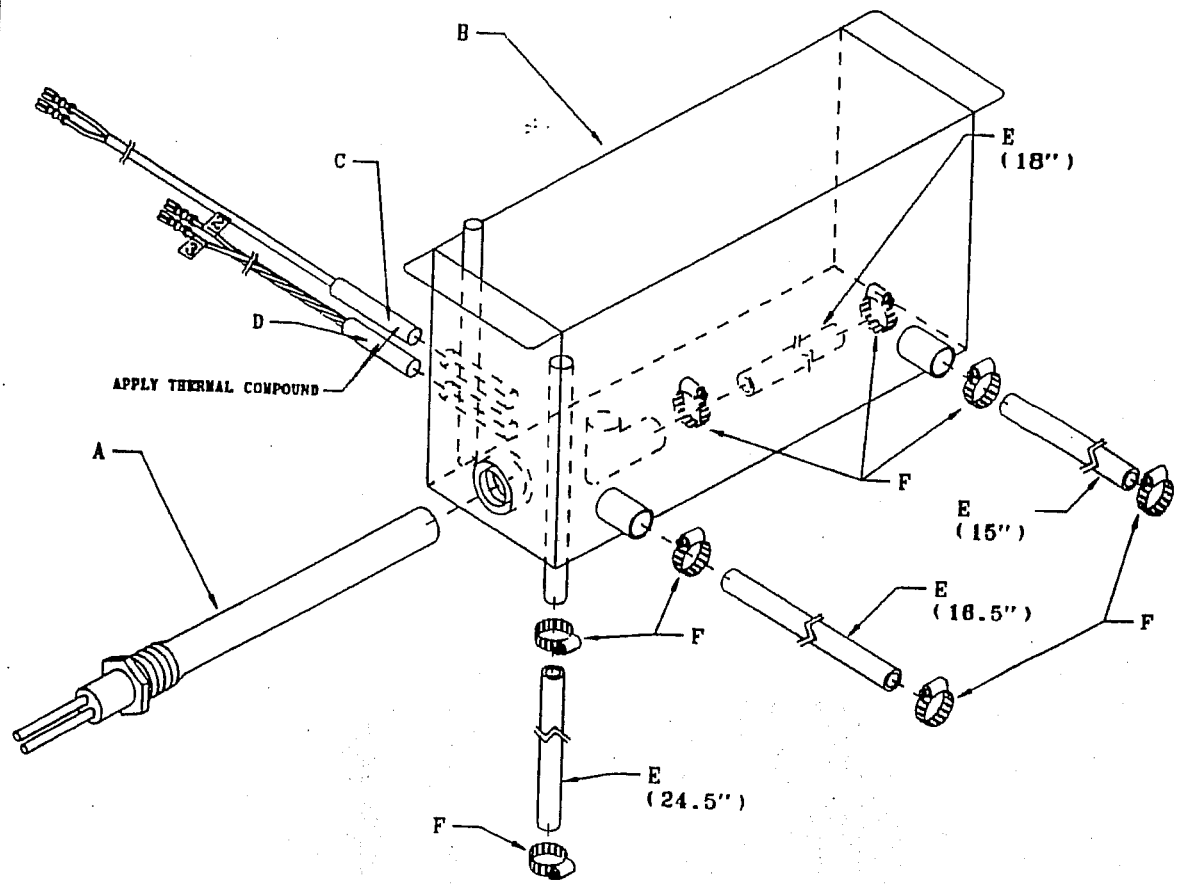

ALPHATEK CORPORATION

NAME OF PART: AX300SE DEVELOPER TANK ASSEMBLY			PART NUMBER: 5536.300.03
REV # 7	DATE OF REV: 9591	BY: FKC	FOR USE IN: AX300SE ONLY

LEGEND:

	DESCRIPTION	PART NUMBER	QUANTITY
A	600 WATT DEVELOPER HEATER ASSEMBLY	5285.350.01	1 EA
B	AX300SE DEVELOPER TANK	4448.300.01	1 EA
C	DEVELOPER THERMOMETER SENSOR THERMISTOR ASM		1 EA
D	DEVELOPER SENSOR THERMISTOR ASM	5185.700.05	1 EA
E	1/2" ID X 3/4" OD VINYL TUBING	135.3416.12	6.25 FT
F	1" STAINLESS STEEL HOSE CLAMP	4139.600.08	8 EA

NOTE: 1.-SUB-PARTS CAN BE ORDERED SEPARATELY.
2.-DUE TO CHANGES IN DESIGN A SERIAL NUMBER MUST ACCOMPANY ANY ORDER TO ENSURE PROPER REPLACEMENT.

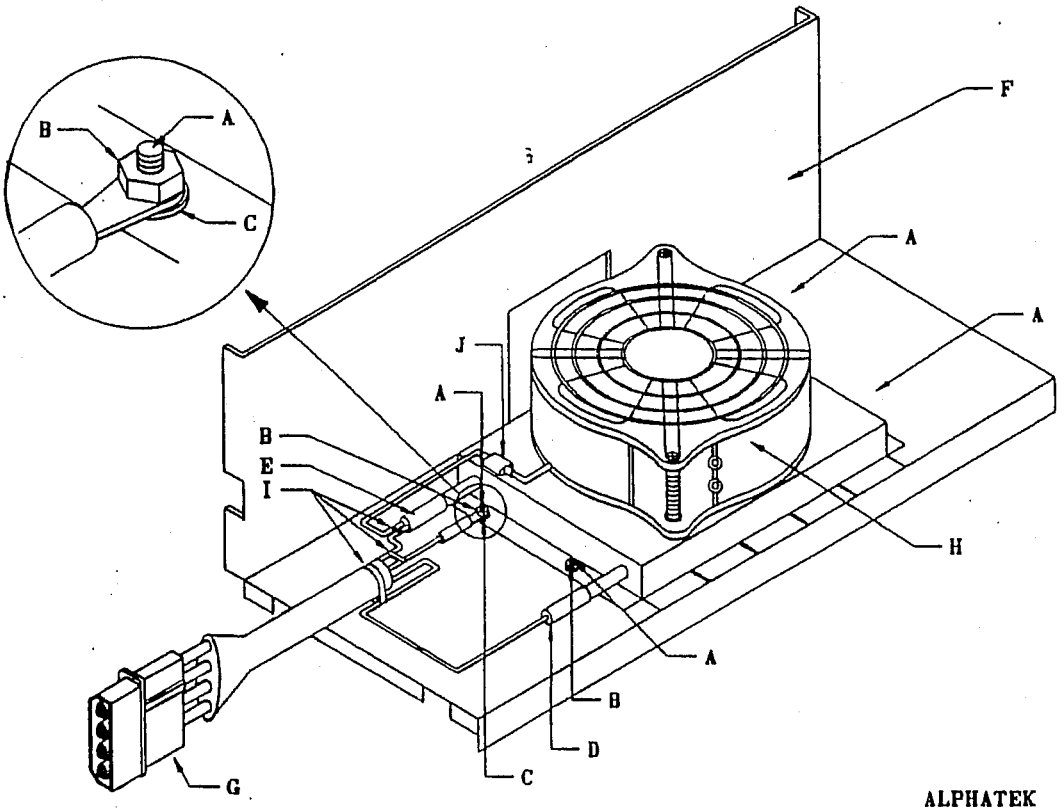

ALPHATEK CORPORATION

NAME OF PART: AX390SE BLOWER BOX LID ASSEMBLY.			PART NUMBER: 5536.300.05
REV #5	DATE OF REV: 9591	BY: FKC GK	FOR USE IN: AX390SE ONLY

LEGEND:

	DESCRIPTION	PART NUMBER	QUANTITY
A	6-32 X 3/8" PHILIPS PAN HEAD MACH SCREW	121.0632.0659	4 EA
B	6-32 18-8 LOCKNUT	122.0632.95	4 EA
C	#6 INTERNAL LOCKWASHER (FOR GROUND WIRE)	123.6060.10	1 EA
D	1/4" HEAT SHRINK TUBING	135.3324.10	.50 FT
E	1/2" HEAT SHRINK TUBING	135.3328.10	.33 FT
F	AX390SE BLOWER BOX LID	4442.300.05	1 EA
G	AX300SE 4 POSITION PLUG HARNESS ASSEMBLY	5285.300.03	1 EA
H	AX390SE AXIAL FAN HOUSING ASSEMBLY	5485.300.06	1 EA
I	PANDUIT NYLON STRAP-SMALL	4150.600.14	3 EA
J	14-16 GA INS FEMALE COUPLER	762.8650	1 EA

NOTE:-SUB-PARTS MAY BE ORDERED SEPARATELY.

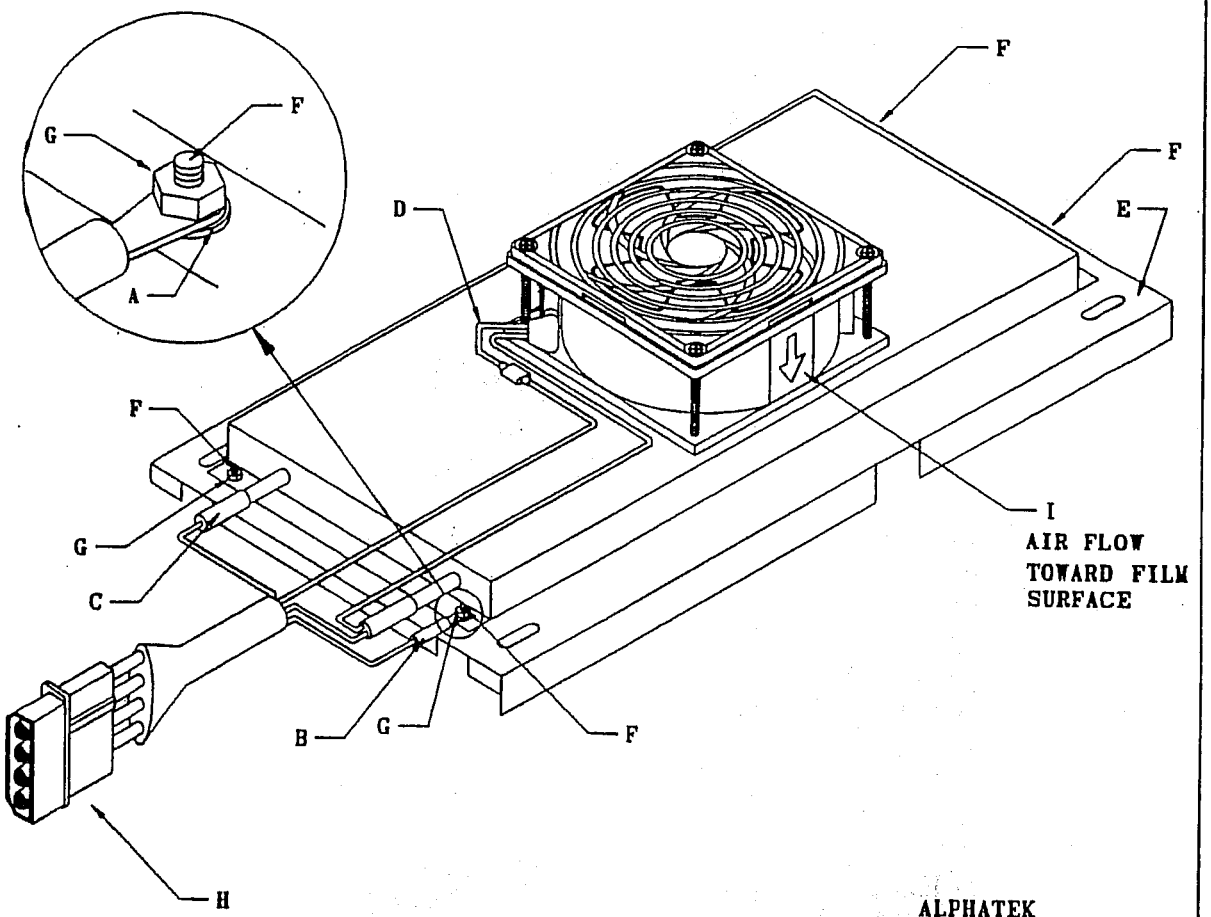

ALPHATEK
CORPORATION

NAME OF PART: MAMMO LOWER BLOWER ASSEMBLY			PART NUMBER: 5536.300.07
REV #4	DATE OF REV: 9591	BY: FKC	FOR USE IN: MAMMO 300 ONLY.

LEGEND:

	DESCRIPTION	PART NUMBER	QUANTITY
A	#6 INTERNAL LOCK WASHER	123.6060.10	1 EA
B	1/4" HEAT SHRINK TUBING	135.3324.10	.25 IN
C	1/2" HEAT SHRINK TUBING	135.3328.10	.40 IN
D	MUFFIN FAN CORD	4184.600.01	1 EA
E	MAMMO 300 BLOWER BOX	4442.300.04	1 EA
F	6-32 X 3/8" PHILLIPS PAN HEAD MACH SCREW	121.0632.0659	4 EA
G	6-32 18-8 LOCKNUT	122.0632.95	4 EA
H	MAMMO 300 4 POSITION PLUG HARNESS ASSEMBLY.	5285.300.03	1 EA
I	MAMMO 300 LOWER MUFFIN FAN HOUSING ASSEMBLY	5485.300.08	1 EA

* - DUE TO DESIGN CHANGES A SERIAL NUMBER MUST ACCOMPANY ANY ORDER TO ENSURE PROPER REPLACEMENT.

NOTE: 1.-SUB-PARTS CAN BE ORDERED SEPARATELY.
2.-DUE TO CHANGES IN DESIGN A SERIAL NUMBER MUST ACCOMPANY ANY ORDER TO ENSURE PROPER REPLACEMENT.

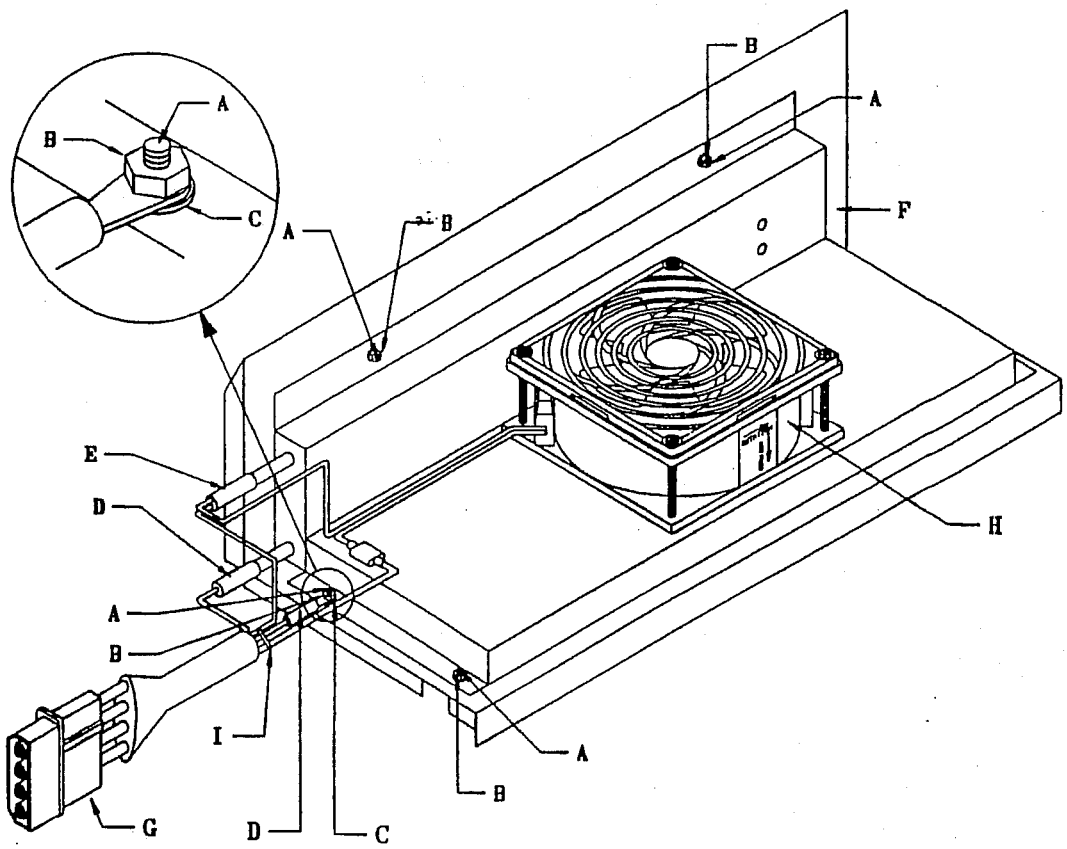

ALPHATEK CORPORATION

NAME OF PART: MAMMO BLOWER BOX LID ASSEMBLY.			PART NUMBER: 5536.300.06
REV #4	DATE OF REV: 9591	BY: FKC	FOR USE IN: MAMMO 300 ONLY.

LEGEND:

	DESCRIPTION	PART NUMBER	QUANTITY
A	6-32 X 3/8" PHILIPS PAN HEAD MACH SCREW	121.0632.0659	6 EA
B	6-32 18-8 LOCKNUT	122.0632.95	6 EA
C	#6 INTERNAL LOCKWASHER (FOR GROUND WIRE)	123.6060.10	1 EA
D	1/4" HEAT SHRINK TUBING	135.3324.10	.25 FT
E	1/2" HEAT SHRINK TUBING	135.3328.10	.25 FT
F	MAMMO 300 BLOWER BOX LID	4442.300.07	1 EA
G	MAMMO 300 4 POSITION PLUG HARNESS ASSEMBLY	5285.300.03	1 EA
H	MAMMO 300 UPPER MUFFIN FAN HOUSING ASSEMBLY	5485.300.07	1 EA
I	PANDUIT NYLON STRAP-SMALL	4150.600.14	1 EA

CAUTION: 240 VOLT ONLY.

NOTE: SUB-PARTS MAY BE ORDERED SEPARATELY.

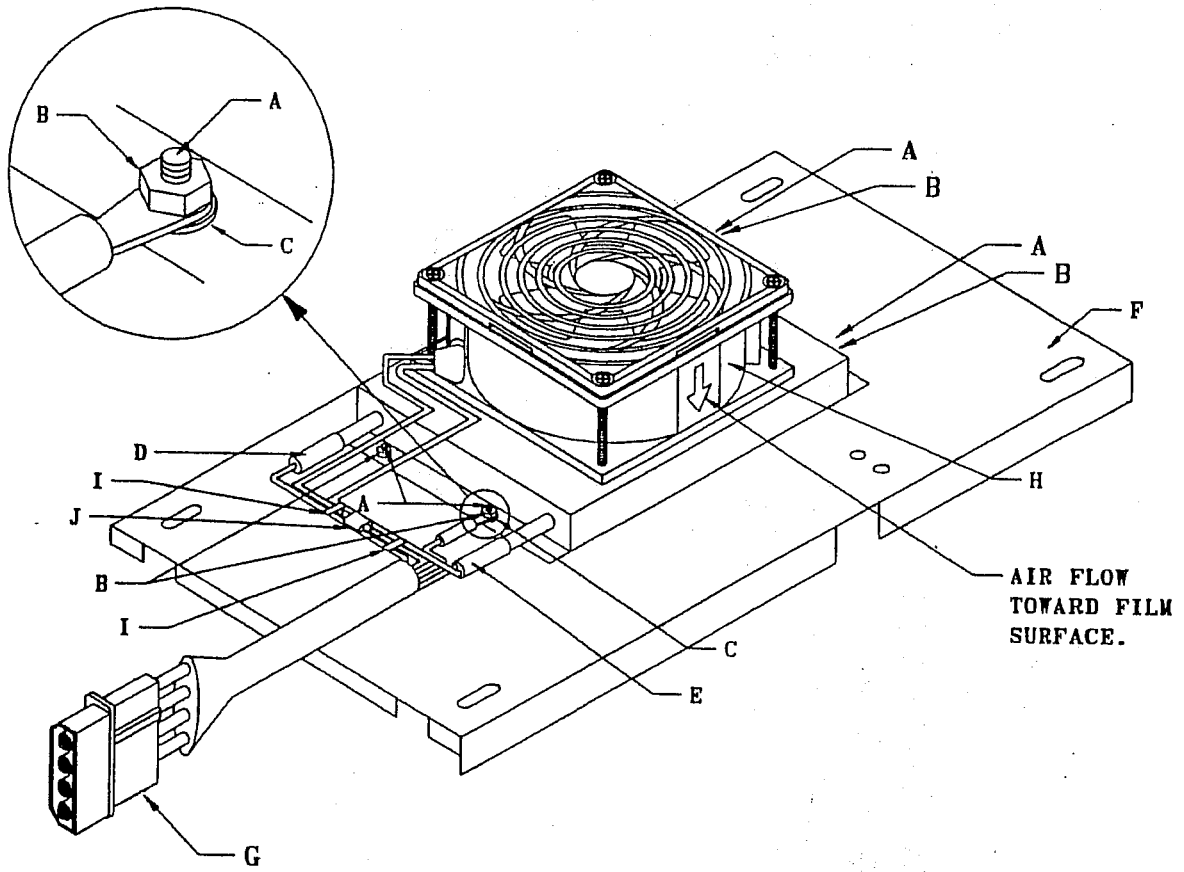

ALPHATEK
CORPORATION

NAME OF PART: 240 VOLT AX300 BLOWER BOX ASSEMBLY			PART NUMBER: 5536.300.08
REV # 1	DATE OF REV: 9596	BY: FKC	FOR USE IN: AX300+AX390SE

LEGEND:

	DESCRIPTION	PART NUMBER	QUANTITY
A	6-32 X 3/8" PHILIPS PAN HEAD MACH SCREW	121.0632.0659	4 EA
B	6-32 18-8 LOCKNUT	122.0632.95	4 EA
C	#6 INTERNAL LOCKWASHER (FOR GROUND WIRE)	123.6060.10	1 EA
D	1/4" HEAT SHRINK TUBING	135.3324.10	.25 FT
E	1/2" HEAT SHRINK TUBING	135.3328.10	.25 FT
F	AX300SE BLOWER BOX	4442.300.02	1 EA
G	AX300SE 4 POSITION PLUG HARNESS ASSEMBLY	5285.300.03	1 EA
H	240 VOLT AX300 LOWER FAN ASSEMBLY	5485.300.10	1 EA
I	PANDUIT NYLON STRAP-SMALL	4150.600.14	2 EA
J	14-16 GA INS FEMALE COUPLER	762.8650	1 EA

CAUTION: 240 VOLT ONLY.

NOTE:1.-SUB-PARTS CAN BE ORDERED SEPARATELY.
2.-DUE TO CHANGES IN DESIGN A SERIAL NUMBER MUST ACCOMPANY ANY ORDER TO ENSURE PROPER REPLACEMENT.

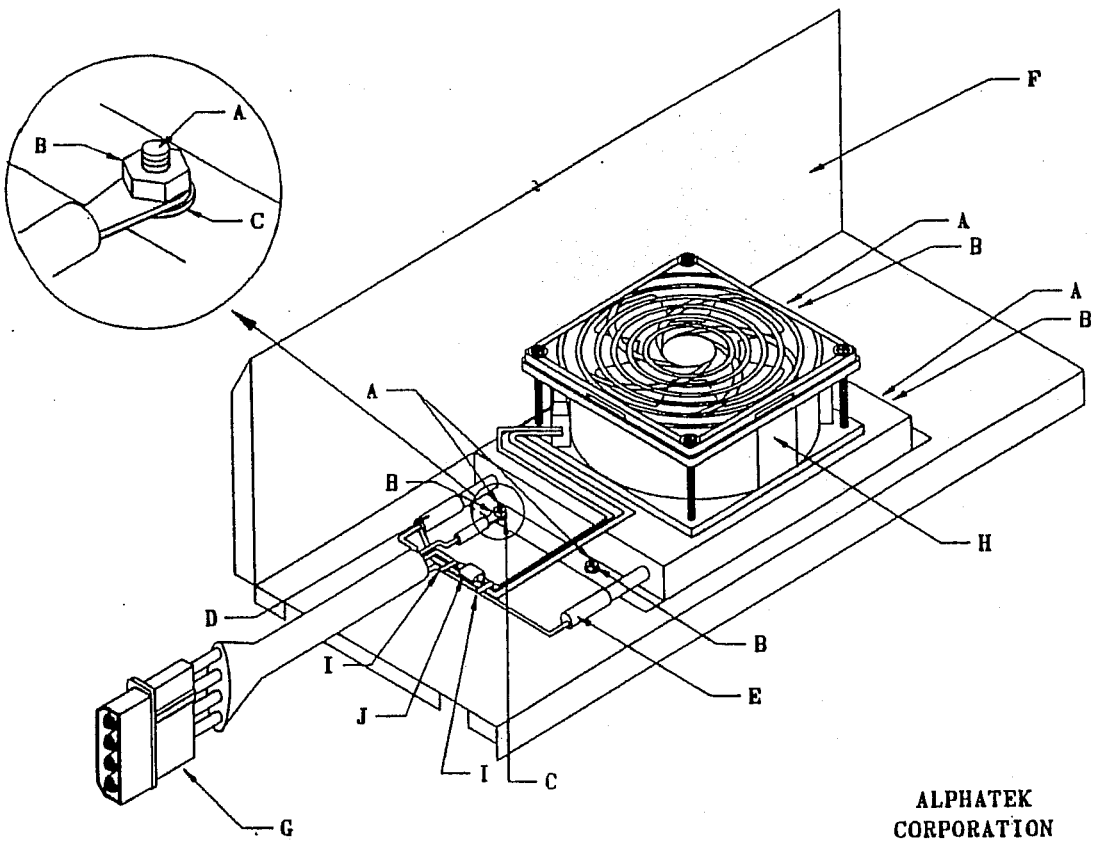

ALPHATEK CORPORATION

NAME OF PART: 240 VOLT AX300 BLOWER LID ASSEMBLY			PART NUMBER: 5536.300.09
REV #1	DATE OF REV: 9596	BY: FKC	FOR USE IN: AX300SE ONLY

LEGEND:

	DESCRIPTION	PART NUMBER	QUANTITY
A	6-32 X 3/8" PHILIPS PAN HEAD MACH SCREW	121.0632.0659	4 EA
B	6-32 18-8 LOCKNUT	122.0632.95	4 EA
C	#6 INTERNAL LOCKWASHER (FOR GROUND WIRE)	123.6060.10	1 EA
D	1/4" HEAT SHRINK TUBING	135.3324.10	.25 FT
E	1/2" HEAT SHRINK TUBING	135.3328.10	.25 FT
F	AX300SE BLOWER BOX LID	4442.300.01	1 EA
G	AX300SE 4 POSITION PLUG/HARNESS ASSEMBLY	5285.300.03	1 EA
H	240 VOLT AX300 UPPER FAN ASSEMBLY	5485.300.11	1 EA
I	PANDUIT NYLON STRAP-SMALL	4150.600.14	2 EA
J	14-16 GA INS FEMALE COUPLER	762.8650	1 EA

CAUTION: 240 VOLT ONLY.

NOTE:1.-SUB-PARTS CAN BE ORDERED SEPARATELY.
2.-DUE TO CHANGES IN DESIGN A SERIAL NUMBER MUST ACCOMPANY ANY ORDER TO ENSURE PROPER REPLACEMENT.

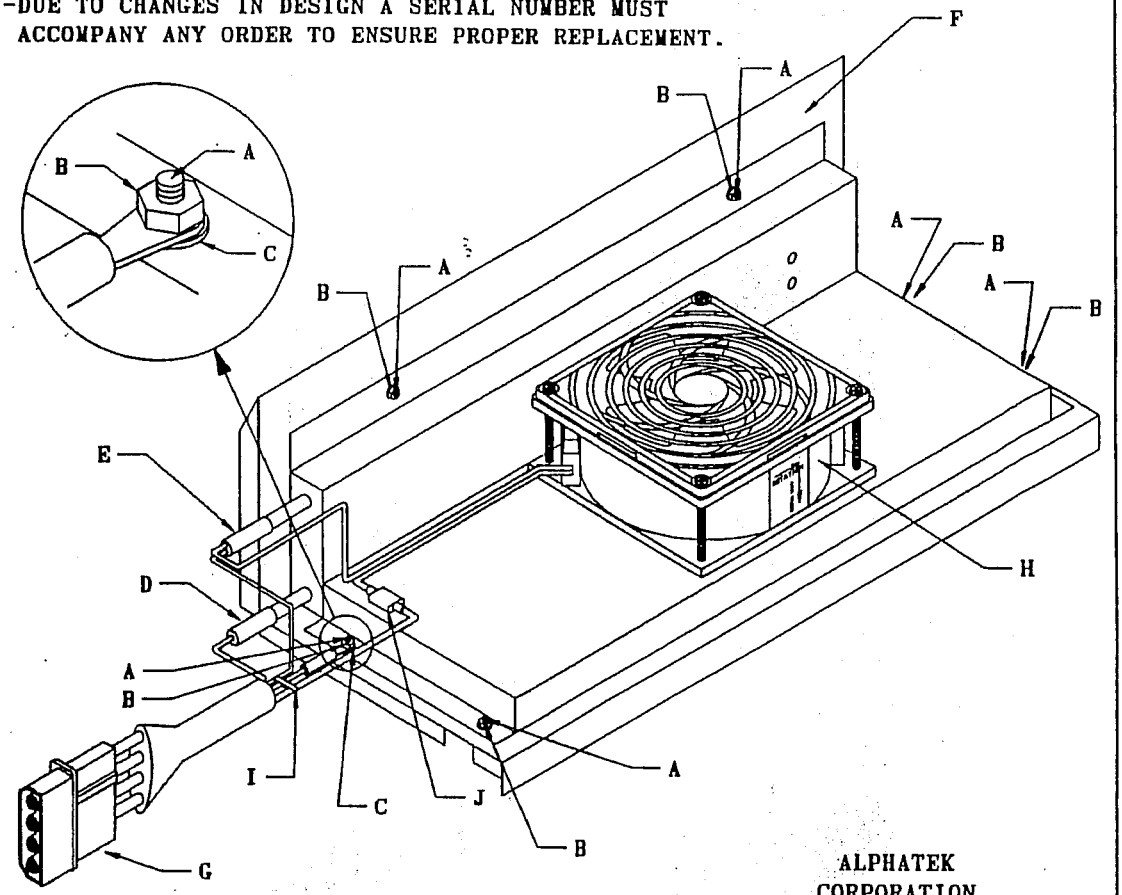

ALPHATEK CORPORATION

NAME OF PART: 240 VOLT MAMMO BLOWER BOX LID ASSEMBLY			PART NUMBER: 5536.300.11
REV # 1	DATE OF REV: 9596	BY: FKC	FOR USE IN: MAMMO 300 ONLY.

LEGEND:

	DESCRIPTION	PART NUMBER	QUANTITY
A	6-32 X 3/8" PHILIPS PAN HEAD MACH SCREW	121.0632.0659	6 EA
B	6-32 18-8 LOCKNUT	122.0632.95	6 EA
C	#6 INTERNAL LOCKWASHER (FOR GROUND WIRE)	123.6060.10	1 EA
D	1/4" HEAT SHRINK TUBING	135.3324.10	.25 FT
E	1/2" HEAT SHRINK TUBING	135.3328.10	.25 FT
F	MAMMO 300 BLOWER LID	4442.300.07	1 EA
G	MAMMO 300 4 POSITION PLUG HARNESS ASSEMBLY.	5285.300.03	1 EA
H	240 VOLT MAMMO UPPER FAN ASSEMBLY	5485.300.12	1 EA
I	PANDUIT NYLON STRAP-SMALL	4150.600.14	1 EA
J	14-16 GA INS FEMALE COUPLER	762.8650	1 EA

CAUTION: 240 VOLT ONLY.

NOTE: BEFORE INSERTING HEATER, WRAP THREADS WITH 3 REVOLUTIONS OF TEFLON TAPE AND ALSO APPLY SILICONE TO THREADS.

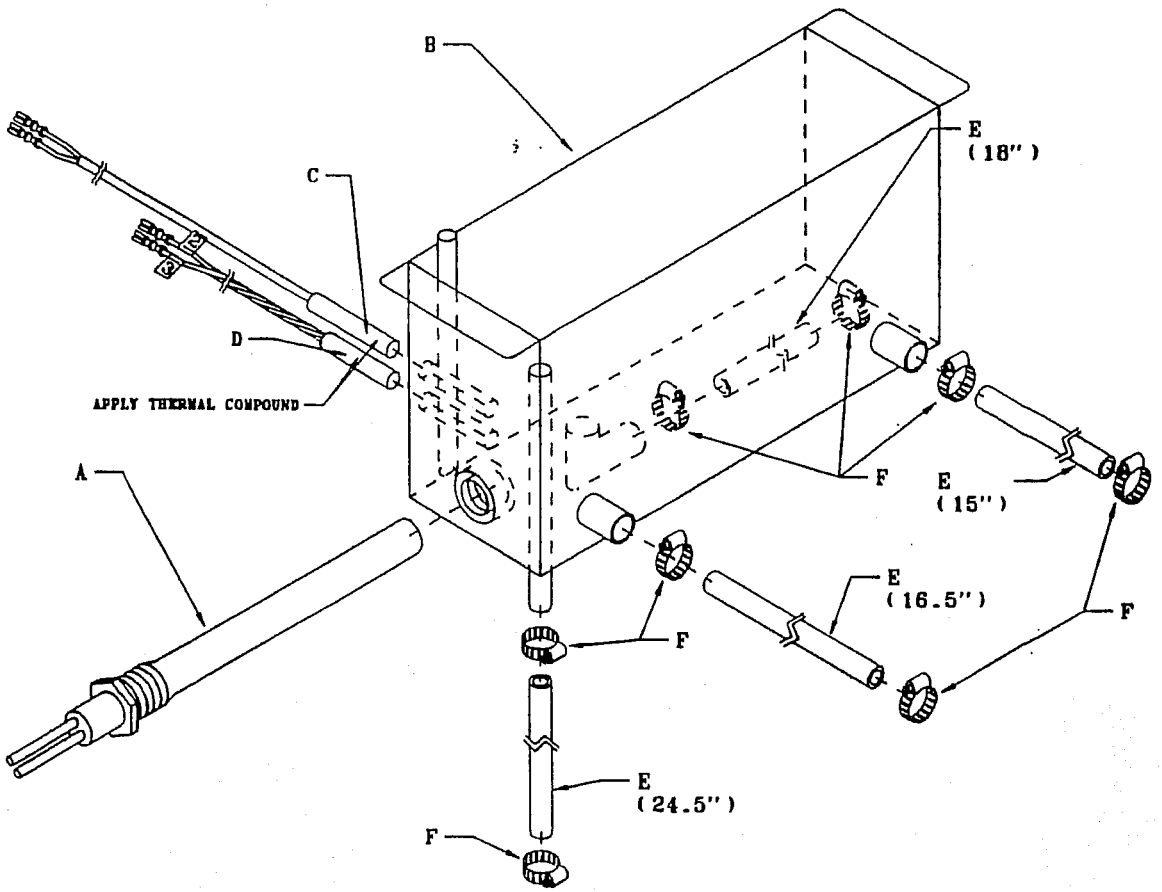

ALPHATEK
CORPORATION

NAME OF PART: 240 VOLT AX300 DEVELOPER TANK ASSEMBLY			PART NUMBER: 5536.300.10
REV # 3	DATE OF REV: 9591	BY: FKC	FOR USE IN: AX300SE ONLY

LEGEND:

	DESCRIPTION	PART NUMBER	QUANTITY
A	240 VOLT 600 WATT DEVELOPER HEATER ASM	5285.300.12	1 EA
B	AX300SE DEVELOPER TANK	4448.300.01	1 EA
C	DEVELOPER THERMOMETER SENSOR THERMISTOR ASM		1 EA
D	DEVELOPER SENSOR THERMISTOR ASM	5185.700.05	1 EA
E	1/2" ID X 3/4" OD VINYL TUBING	135.3416.12	6.25 FT
F	1" STAINLESS STEEL HOSE CLAMP	4139.600.08	8 EA

CAUTION: 240 VOLT ONLY.

NOTE: 1.-SUB-PARTS CAN BE ORDERED SEPARATELY.
2.-DUE TO CHANGES IN DESIGN A SERIAL NUMBER MUST ACCOMPANY ANY ORDER TO ENSURE PROPER REPLACEMENT.

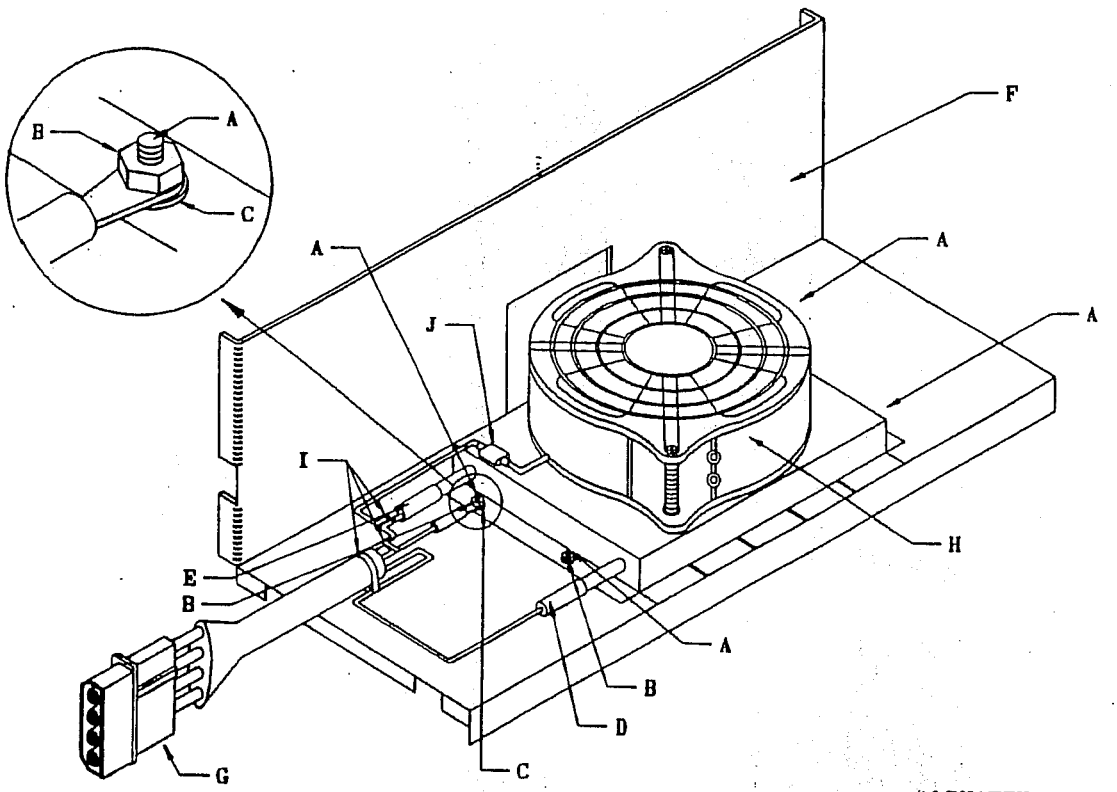

ALPHATEK CORPORATION

NAME OF PART: 240 VOLT AX390 AXIAL BLOWER ASSEMBLY			PART NUMBER: 5536.390.02
REV #2	DATE OF REV: 9591	BY: FKC	FOR USE IN: AX390SE ONLY

LEGEND:

	DESCRIPTION	PART NUMBER	QUANTITY
A	6-32 X 3/8" PHILIPS PAN HEAD MACH SCREW	1210.632.0659	4 EA
B	6-32 18-8 LOCKNUT	1220.632.95	4 EA
C	#6 INTERNAL LOCKWASHER	1236.060.10	1 EA
D	1/4" HEAT SHRINK TUBING	1353.324.10	.25 FT
E	1/2" HEAT SHRINK TUBING	1353.328.10	.25 FT
F	AX390SE BLOWER BOX LID	4442.300.05	1 EA
G	AX300SE 4 POSITION PLUG HARNESS ASSEMBLY	5285.300.03	1 EA
H	240 VOLT AX390 AXIAL FAN ASSEMBLY	5485.390.02	1 EA
I	PANDUIT NYLON STRAP-SMALL	4150.600.14	3 EA
J	14-16 GA INS FEMALE COUPLER	762.8650	1 EA

CAUTION: 240 VOLT ONLY.

NOTE: SUB-PARTS MAY BE ORDERED SEPARATELY.

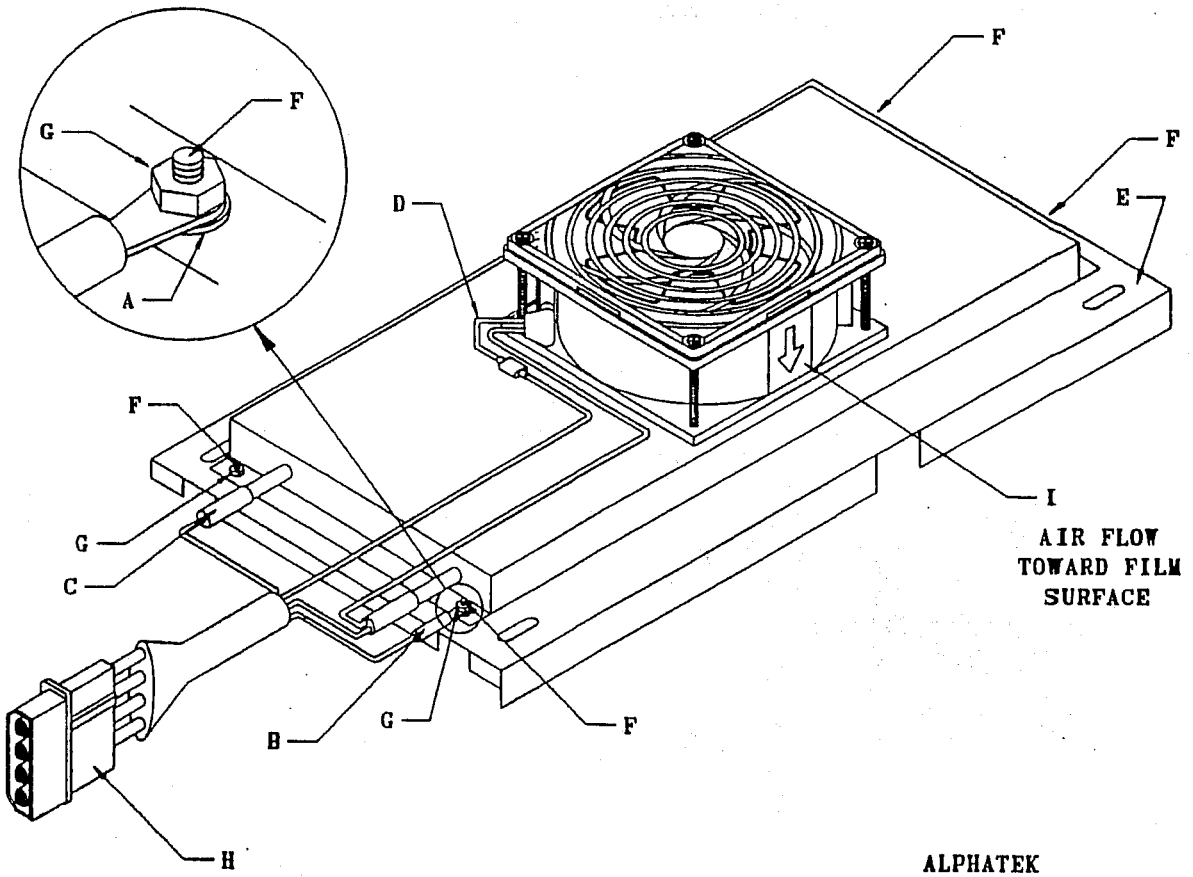

ALPHATEK
CORPORATION

NAME OF PART: 240 VOLT MAMMO BLOWER BOX ASSEMBLY			PART NUMBER: 5536.300.12
REV #4	DATE OF REV: 9591	BY: FKC	FOR USE IN: MAMMO 300 ONLY.

LEGEND:

	DESCRIPTION	PART NUMBER	QUANTITY
A	#6 INTERNAL LOCK WASHER	123.6060.10	1 EA
B	1/4" HEAT SHRINK TUBING	135.3324.10	.25 IN
C	1/2" HEAT SHRINK TUBING	135.3328.10	.40 IN
D	MUFFIN FAN CORD	4184.600.01	1 EA
E	MAMMO 300 BLOWER BOX	4442.300.04	1 EA
F	6-32 X 3/8" PHILLIPS PAN HEAD MACH SCREW	121.0632.0659	4 EA
G	6-32 18-8 LOCKNUT	122.0632.95	4 EA
H	MAMMO 300 4 POSITION PLUG HARNESS ASSEMBLY	5285.300.03	1 EA
I	240 VOLT MAMMO LOWER FAN ASSEMBLY	5485.300.13	1 EA

* - DUE TO DESIGN CHANGES A SERIAL NUMBER MUST ACCOMPANY ANY ORDER TO ENSURE PROPER REPLACEMENT.

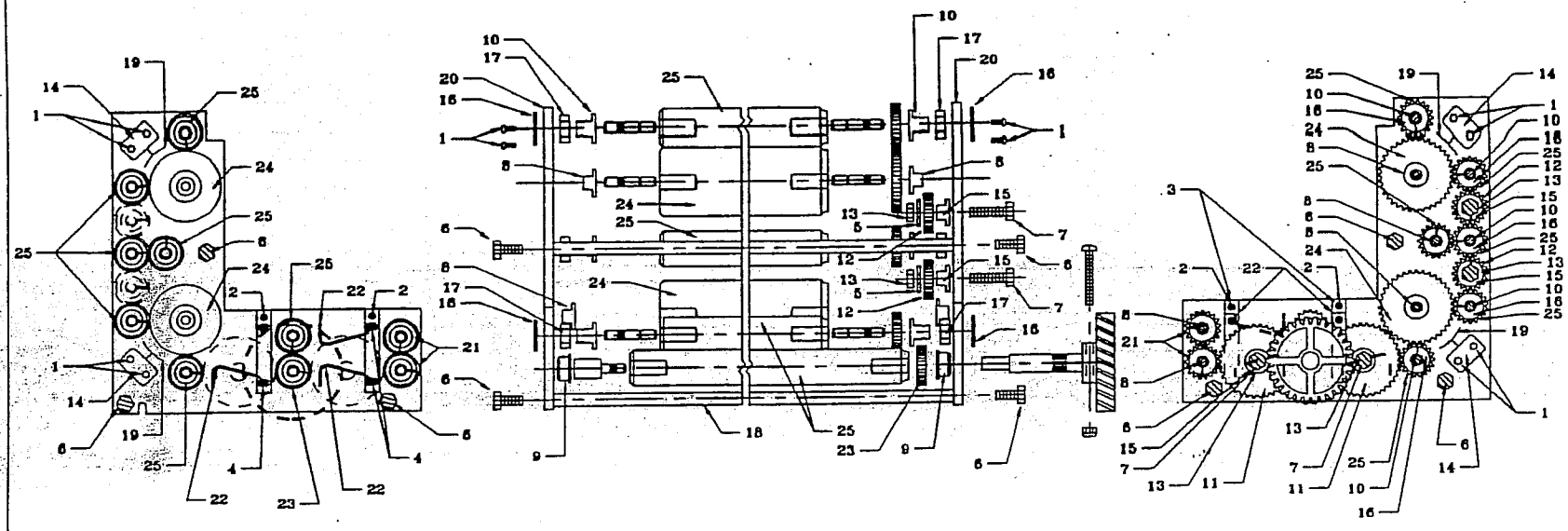

ALPHATEK CORPORATION

NOTE: SEE BACK OF DIAGRAM FOR TRANSPORT ROLLER & SHAFT BREAKDOWN.

NAME OF PART: AX300SE DRYER RACK ASSEMBLY	PART NUMBER: 5543.300.04	REV #1	DATE OF REV: 9583	BY: FKC	FOR USE IN: AX300+AX390

LEGEND =

ITEM #	DESCRIPTION	PART NUMBER	QUANTITY	ITEM #	DESCRIPTION	PART NUMBER	QUANTITY
1	6 X 5/8 TYPE A PHLPS PH SHT MET SCREW	126.2090.659	8 EA	14	CROSSOVER SUPPORT	4153.600.09	4 EA
2	6-32 X 1/2" PHILLIPS PAN HEAD MACH SCREW	121.0632.0854	2 EA	15	IDLER GEAR FITTING	4153.600.10	4 EA
3	6-32 18-8 LOCKNUT	122.0632.95	2 EA	16	GROMMET MOUNT WASHER	4158.600.04	12 EA
4	6/32 X 3/8 PAN HD MACH SCREW	121.0632.0659	3 EA	17	RUBBER GROMMET	4167.600.08	12 EA
5	1/4" STANDARD FLAT WASHER	123.8314.60	4 EA	18	TIE BAR	4214.600.07	3 EA
6	1/4"-20 X 5/8" HEX HEAD BOLT	127.4042.0054	6 EA	19	STAINLESS STEEL CROSSOVER GUIDE	4242.600.03	2 EA
7	1/4"-20 X 1" HEX HEAD BOLT	127.4042.0084	4 EA	20	AX300SE DRYER SIDE PLATE	4459.300.03	2 EA
8	SMALL ROLLER BEARING	4152.600.02	10 EA	21	SQUEEGEE ROLLER ASSEMBLY	5236.600.01	2 EA
9	LARGE ROLLER BEARING	4152.600.03	2 EA	22	SMALL DRYER GUIDE ASSEMBLY	5236.600.04	2 EA
10	GROMMET MT ROLLER BEARING	4152.600.05	12 EA	23	DEVELOPER DRIVE ROLLER ASSEMBLY	5262.600.05	1 EA
11	GEAR LARGE 1/2" BORE	4153.600.01	2 EA	24	LARGE ROLLER ASSEMBLY	5262.600.06	2 EA
12	GEAR SMALL 1/2" BORE	4153.600.04	2 EA	25	SMALL ROLLER ASSEMBLY	5262.600.07	7 EA
13	1/4-20 316 SS LOCKNUT W/INSERT	122.1420.35	4 EA				

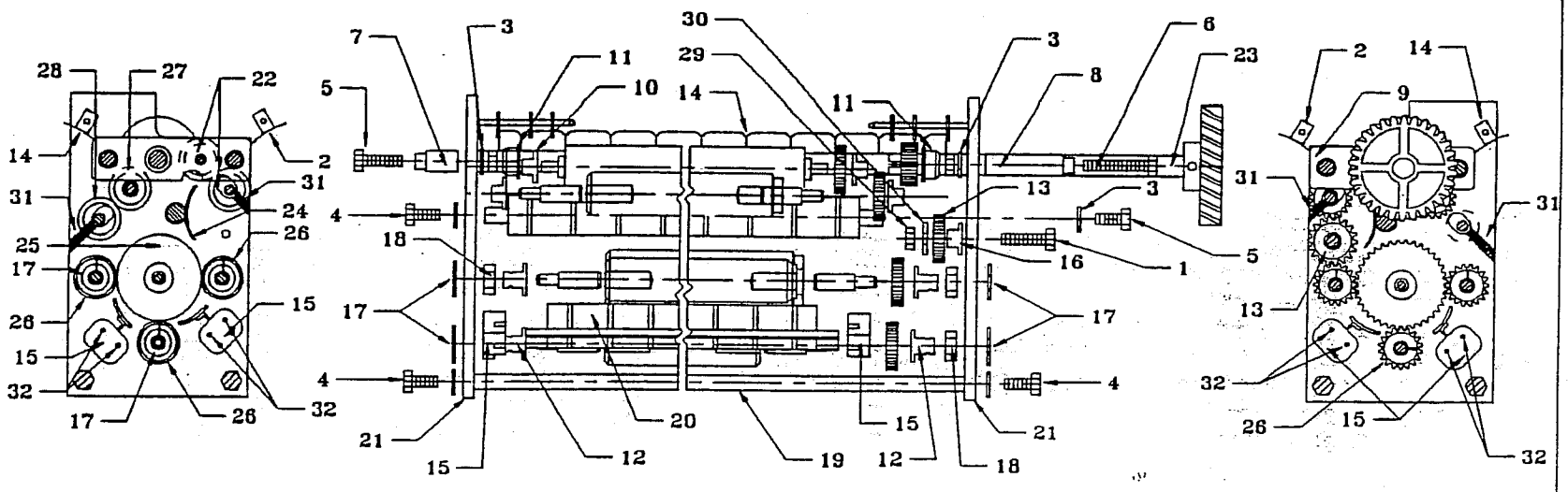

ALPHATEK
CORPORATION

NAME OF PART: WASH RACK ASSEMBLY	PART NUMBER: 5543.300.03	REV # 21	DATE OF REV: 9581	BY: FKC	FOR USE IN: AX300 SE,AX300 SE NANNO 300

LEGEND =

ITEM #	DESCRIPTION	PART NUMBER	QUANTITY	ITEM #	DESCRIPTION	PART NUMBER	QUANTITY
1	1/4-20 X 1" HEX HEAD BOLT	127.4042.0084	1 EA	17	GROMMER MOUNT WASHER	4158.600.04	6 EA
2	CROSSOVER GUIDE ASM "93"	5236.700.07	1 EA	18	RUBBER GROMMET	4167.600.08	6 EA
3	1/4" MED SPLIT LOCKWASHER 18-8	123.4142.10	2 EA	19	TIE BAR	4214.600.07	2 EA
4	1/4"-20 X 5/8" HEX HEAD BOLT	127.4042.0054	6 EA	20	STAINLESS STEEL CROSSOVER GUIDE	4242.600.03	2 EA
5	1/4"-20 X 1-1/2" HEX HEAD BOLT	127.4042.0124	2 EA	21	WASH SIDE PLATE	4459.300.02	2 EA
6	1/4"-20 X 2-1/2 HEX HEAD BOLT	127.4042.0204	2 EA	22	SQUEEGEE ROLLER ASSEMBLY	5236.600.01	2 EA
7	RACK SUPPORT PIN - SMALL	4121.600.04	2 EA	23	RACK DRIVE SHAFT ASSEMBLY	5236.600.06	1 EA
8	RACK SUPPORT PIN - LARGE	4121.600.05	2 EA	24	INNER RACK GUIDE	4242.700.04	1 EA
9	WASH BOOSTER PLATE	4144.300.03	2 EA	25	LARGE ROLLER ASSEMBLY	5262.600.06	1 EA
10	SMALL ROLLER BEARING	4152.600.02	10 EA	26	SMALL ROLLER ASSEMBLY	5262.600.07	3 EA
11	LARGE ROLLER BEARING	4152.600.03	2 EA	27	SILICON ROLLER ASSEMBLY	5236.700.04	1 EA
12	GROMMET MT ROLLER BEARING	4152.600.05	6 EA	28	SILICON ROLLER	4267.700.01	1 EA
13	GEAR SMALL 1/2" BORE	4153.600.04	1 EA	29	1/4"-20 316 SS LOCKNUT W/INSERT	122.1420.35	1 EA
14	DEYER FEED CROSSOVER GUIDE ASM	5236.700.06	1 EA	30	1/4 STANDARD FLAT WASHER	123.6314.60	1 EA
15	CROSSOVER SUPPORT	4153.600.09	4 EA	31	6-32 X 1/2" SOCKET SET SCREW	124.0632.0846	4 EA
16	IDLER GEAR FITTING	4153.600.10	1 EA	32	8 X 5/8 TYPE A PHLPS PH SHT MET SCREW	126.2090.659	8 EA

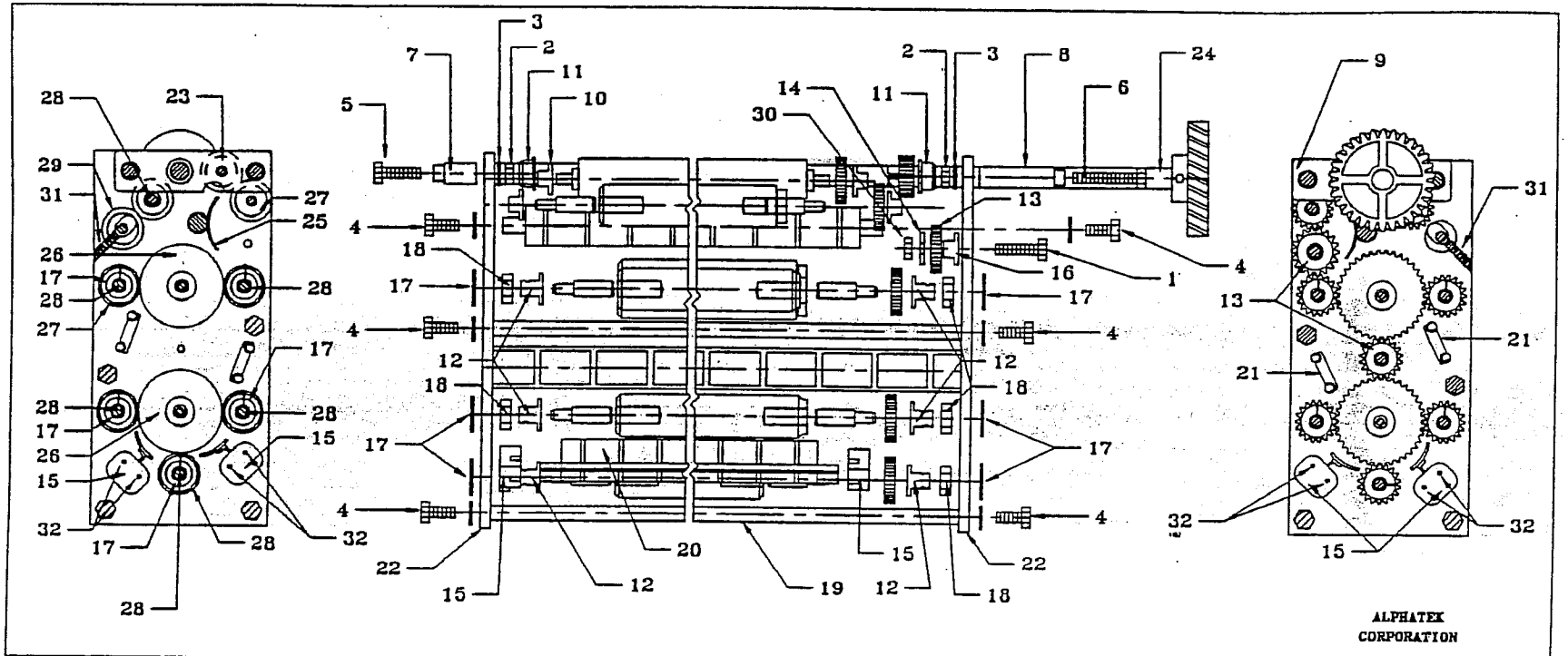

NAME OF PART: MAMMO DEVELOPER RACK ASSEMBLY	PART NUMBER: 5543.300.05	REV # 20	DATE OF REV: 9581	BY: FKC	FOR USE IN: MAMMO 300

LEGEND =

ITEM #	DESCRIPTION	PART NUMBER	QUANTITY	ITEM #	DESCRIPTION	PART NUMBER	QUANTITY
1	1/4-20 X 1" HEX HEAD BOLT	127.4042.0084	2 EA	17	GROMMET MOUNT WASHER	4158.600.04	10 EA
2	1/4"-20 18-8 HEXNUT (NO INSERT)	122.1420.95	4 EA	18	RUBBER GROMMET	4167.600.08	10 EA
3	1/4" MED SPLIT LOCKWASHER 18-8	123.4142.10	6 EA	19	TIE BAR	4214.600.07	4 EA
4	1/4"-20 X 5/8" HEX HEAD BOLT	127.4042.0054	10 EA	20	STAINLESS STEEL CROSSOVER GUIDE	4242.600.03	2 EA
5	1/4"-20 X 1-1/2" HEX HEAD BOLT	127.4042.0124	2 EA	21	LADDER GUIDE	4253.600.03	2 EA
6	1/4"-20 X 2-1/2 HEX HEAD BOLT	127.4042.0204	2 EA	22	DEVELOPER SIDE PLATE	4459.350.01	2 EA
7	RACK SUPPORT PIN - SMALL	4121.600.04	2 EA	23	SQUEEGEE ROLLER ASSEMBLY	5236.600.01	1 EA
8	RACK SUPPORT PIN - LARGE	4121.600.05	2 EA	24	RACK DRIVE SHAFT ASSEMBLY	5236.600.06	1 EA
9	DEVELOPER BOOSTER PLATE	4144.700.01	2 EA	25	INNER RACK GUIDE	4242.700.04	1 EA
10	SMALL ROLLER BEARING	4152.600.02	12 EA	26	LARGE ROLLER ASSEMBLY	5262.600.06	2 EA
11	LARGE ROLLER BEARING	4152.600.03	2 EA	27	SMALL ROLLER ASSEMBLY	5262.600.07	1 EA
12	GROMMET MT ROLLER BEARING	4152.600.05	10 EA	28	SILICONE ROLLER ASSEMBLY	5236.700.04	6 EA
13	GEAR SMALL 1/2" BORE	4153.600.04	2 EA	29	SILICONE ROLLER	4267.700.01	1 EA
14	1/4 STANDARD FLAT WASHER	123.6314.60	2 EA	30	1/4-20 316 SS LOCKNUT W/INSERT	122.1420.35	2 EA
15	CROSSOVER SUPPORT	4153.600.09	4 EA	31	6/32 X 1/2" SOCKET SET SCREW	124.0632.0846	2 EA
16	IDLER GEAR FITTING	4153.600.10	2 EA	32	6 X 5/8 TYPE A PHLPS PH SHT MET SCREW	126.2090.659	8 EA

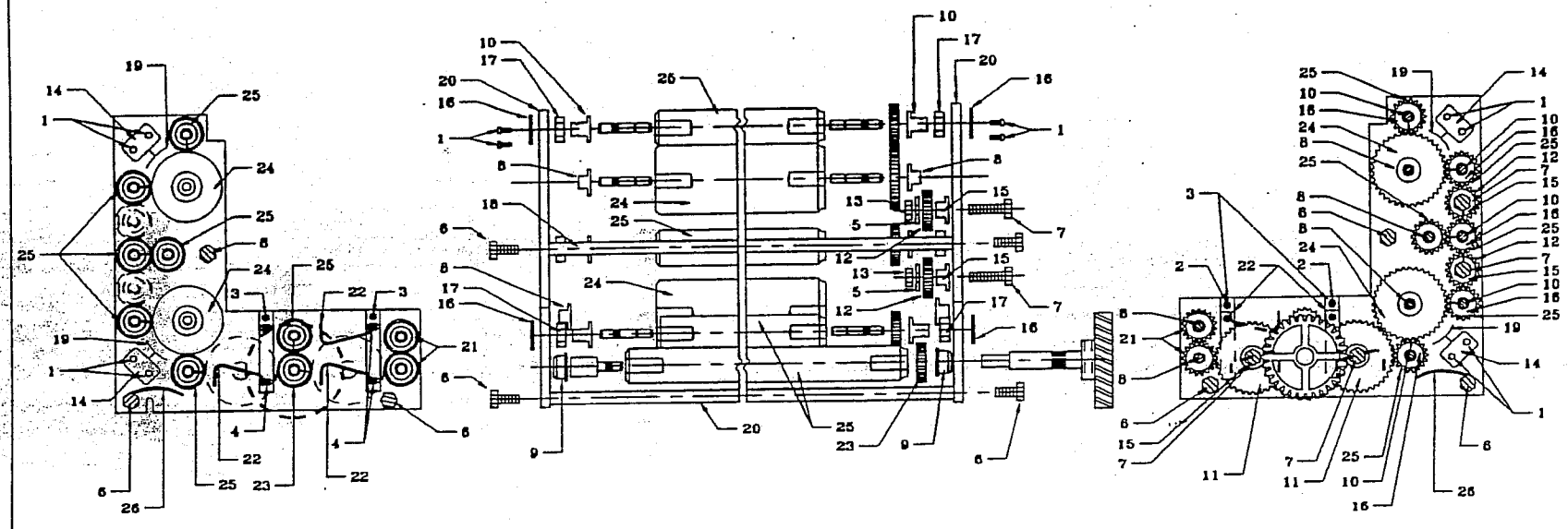

ALPHATEK CORPORATION

NOTE: SEE BACK OF DIAGRAM FOR TRANSPORT ROLLER & SHAFT BREAKDOWN.

NAME OF PART: MAMMO DRYER RACK	PART NUMBER: 5543.300.06	REV #1	DATE OF REV: 9582	BY: FXC	FOR USE IN: ONLY MAMMO 300

LEGEND =

ITEM #	DESCRIPTION	PART NUMBER	QUANTITY	ITEM #	DESCRIPTION	PART NUMBER	QUANTITY
1	6 X 5/8 TYPE A PHLPS PH SHT MET SCREW	126.2090.659	8 EA	14	CROSSOVER SUPPORT	4153.600.09	4 EA
2	6-32 X 1/2" PHILLIPS PAN HEAD MACH SCREW	121.0632.0859	2 EA	15	IDLER GEAR FITTING	4153.600.10	4 EA
3	6-32 18-8 LOCKNUT	122.0632.95	2 EA	16	GROMMET MOUNT WASHER	4158.600.04	12 EA
4	6/32 X 3/8 PAN HD MACH SCREW	121.0632.0859	3 EA	17	RUBBER GROMMET	4167.600.08	12 EA
5	1/4" STANDARD FLAT WASHER	123.8314.60	4 EA	18	TIE BAR	4214.600.07	2 EA
6	1/4"-20 X 5/8" HEX HEAD BOLT	1274.042.0054	6 EA	19	STAINLESS STEEL CROSSOVER GUIDE	4242.600.03	2 EA
7	1/4"-20 X 1" HEX HEAD BOLT	127.4042.0084	4 EA	20	AX300SE DRYER SIDE PLATE	4459.300.03	2 EA
8	SMALL ROLLER BEARING	4152.600.02	10 EA	21	SQUEEGEE ROLLER ASSEMBLY	5236.600.01	2 EA
9	LARGE ROLLER BEARING	4152.600.03	2 EA	22	SMALL DRYER GUIDE ASSEMBLY	5236.600.04	2 EA
10	GROMMET MT ROLLER BEARING	4152.600.05	12 EA	23	DEVELOPER DRIVE ROLLER ASSEMBLY	5262.600.05	1 EA
11	GEAR LARGE 1/2" BORE	4153.600.01	2 EA	24	LARGE ROLLER ASSEMBLY	5262.600.06	2 EA
12	GEAR SMALL 1/2" BORE	4153.600.04	2 EA	25	SMALL ROLLER ASSEMBLY	5262.600.07	7 EA
13	1/4-20 316 SS LOCKNUT W/INSERT	122.1420.35	4 EA	26	DRYER FEED GUIDE	4241.600.16	1 EA

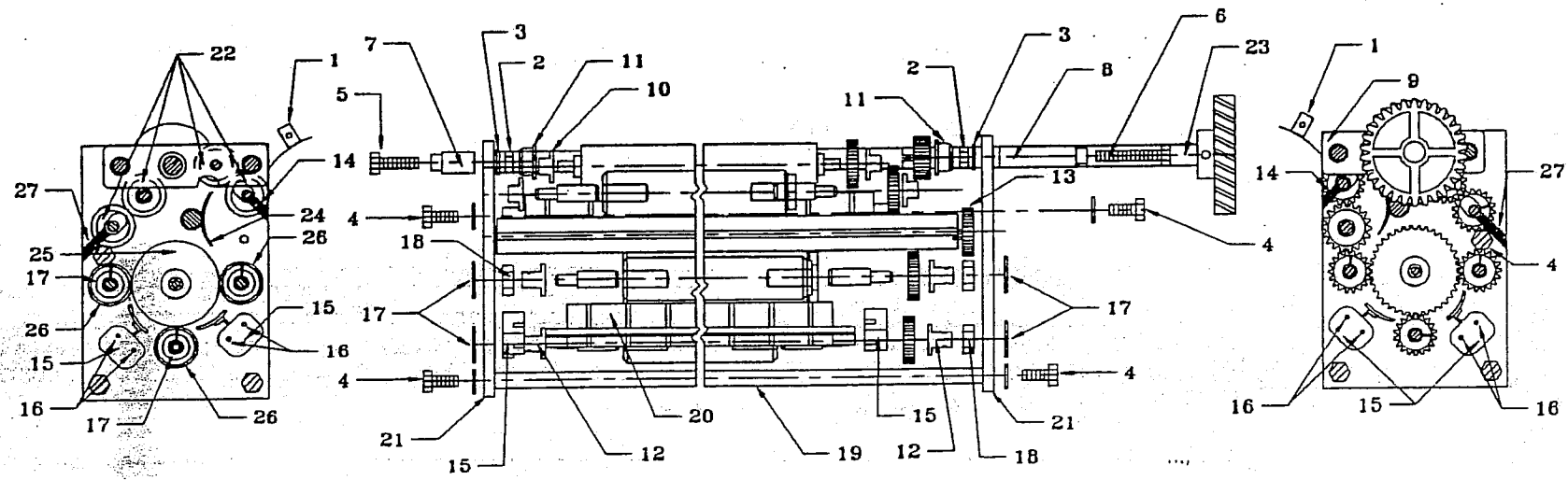

ALPHATEK
CORPORATION

NAME OF PART: FIXER RACK ASSEMBLY	PART NUMBER: 5543.300.02	REV # 19	DATE OF REV: 9581	BY: FKC	FOR USE IN: AX300 SE,AX350 AX380 SE,NANBO 300

LEGEND =

ITEM #	DESCRIPTION	PART NUMBER	QUANTITY	ITEM #	DESCRIPTION	PART NUMBER	QUANTITY
1	CROSSOVER GUIDE ASM "93"	5236.700.07	1 EA	14	8-32 X 1/8" SOCKET SET SCREW	124.0632.0846	2 EA
2	1/4"-20 18-8 HEXNUT (NO INSERT)	122.1420.95	2 EA	15	CROSSOVER SUPPORT	4153.600.09	4 EA
3	1/4" MED SPLIT LOCKWASHER 18-8	123.4142.10	4 EA	16	6 X 5/8 TYPE A PHLPS PH SHT MET SCREW	126.2090.659	8 EA
4	1/4"-20 X 5/8" HEX HEAD BOLT	127.4042.0054	8 EA	17	GROMMER MOUNT WASHER	4158.600.04	6 EA
5	1/4"-20 X 1-1/2" HEX HEAD BOLT	127.4042.0124	2 EA	18	RUBBER GROMMET	4167.600.08	6 EA
6	1/4"-20 X 2-1/2 HEX HEAD BOLT	127.4042.0204	2 EA	19	TIE BAR	4214.600.07	3 EA
7	RACK SUPPORT PIN - SMALL	4121.600.04	2 EA	20	STAINLESS STEEL CROSSOVER GUIDE	4242.600.03	2 EA
8	RACK SUPPORT PIN - LARGE	4121.600.05	2 EA	21	FIXER SIDE PLATE	4459.300.01	2 EA
9	FIXER BOOSTER PLATE	4144.700.02	2 EA	22	SQUEEGEE ROLLER ASSEMBLY	5236.600.01	4 EA
10	SMALL ROLLER BEARING	4152.600.02	12 EA	23	RACK DRIVE SHAFT ASSEMBLY	5236.600.06	1 EA
11	LARGE ROLLER BEARING	4152.600.03	2 EA	24	INNER RACK GUIDE	4242.700.04	1 EA
12	GROMMET MT ROLLER BEARING	4152.600.05	6 EA	25	LARGE ROLLER ASSEMBLY	5262.600.06	1 EA
13	AGITATOR PADDLE ASM	5262.600.02	1 EA	26	SMALL ROLLER ASSEMBLY	5262.600.07	3 EA
				27	6-32 X 1/2" SOCKET SET SCREW	124.0632.0896	2 EA

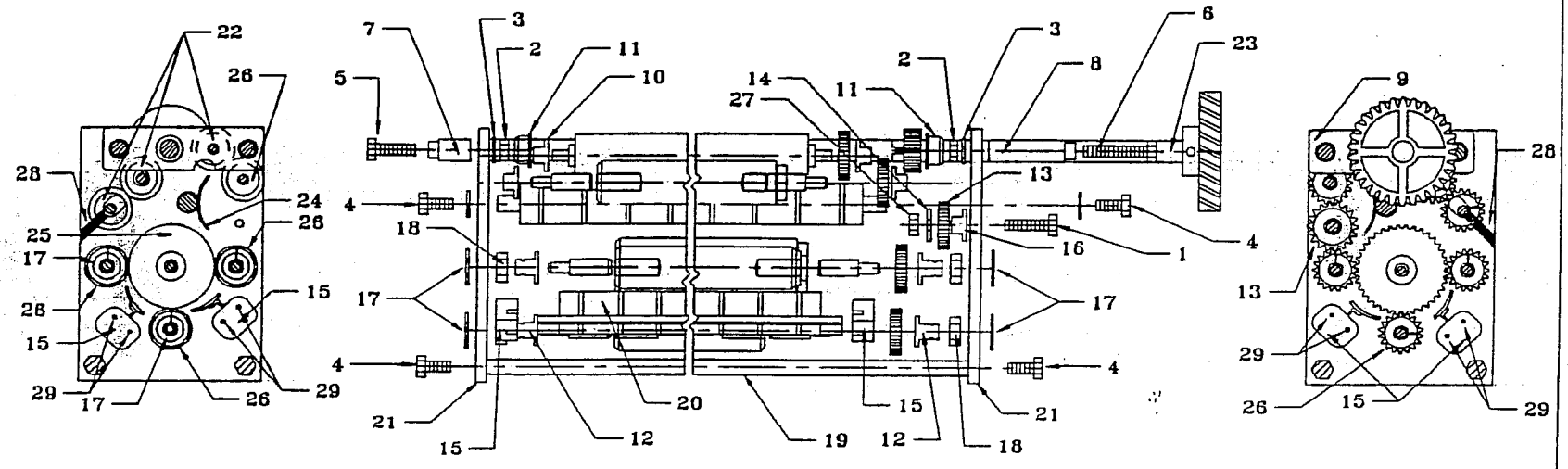

ALPHATEK
CORPORATION

NAME OF PART: AX300SE DEVELOPER RACK ASSEMBLY	PART NUMBER: 5543.300.01	REV # 20	DATE OF REV: 9581	BY: FKC	FOR USE IN: AX300SE

LEGEND =

ITEM #	DESCRIPTION	PART NUMBER	QUANTITY	ITEM #	DESCRIPTION	PART NUMBER	QUANTITY
1	1/4-20 X 1" HEX HEAD BOLT	127.4042.0084	1 EA	15	CROSSOVER SUPPORT	4153.600.09	4 EA
2	1/4"-20 18-8 HEXNUT (NO INSERT)	122.1420.95	4 EA	16	IDLER GEAR FITTING	4153.600.10	1 EA
3	1/4" MED SPLIT LOCKWASHER 18-8	123.4142.10	6 EA	17	GROMMER MOUNT WASHER	4158.600.04	6 EA
4	1/4"-20 X 5/8" HEX HEAD BOLT	127.4042.0054	6 EA	18	RUBBER GROMMET	4167.600.08	6 EA
5	1/4"-20 X 1-1/2" HEX HEAD BOLT	127.4042.0124	2 EA	19	TIE BAR	4214.600.07	2 EA
6	1/4"-20 X 2-1/2 HEX HEAD BOLT	127.4042.0204	2 EA	20	STAINLESS STEEL CROSSOVER GUIDE	4242.600.03	2 EA
7	RACK SUPPORT PIN - SMALL	4121.600.04	2 EA	21	DEVELOPER SIDE PLATE	4459.300.05	2 EA
8	RACK SUPPORT PIN - LARGE	4121.600.05	2 EA	22	SQUEEGEE ROLLER ASSEMBLY	5236.600.01	3 EA
9	DEVELOPER BOOSTER PLATE	4144.700.01	2 EA	23	RACK DRIVE SHAFT ASSEMBLY	5236.600.06	1 EA
10	SMALL ROLLER BEARING	4152.600.02	10 EA	24	INNER RACK GUIDE	4242.700.04	1 EA
11	LARGE ROLLER BEARING	4152.600.03	2 EA	25	LARGE ROLLER ASSEMBLY	5262.600.06	1 EA
12	GROMMET MT ROLLER BEARING	4152.600.05	6 EA	26	SMALL ROLLER ASSEMBLY	5262.600.07	4 EA
13	GEAR SMALL 1/2" BORE	4153.600.04	1 EA	27	1/4-20 316 SS LOCKNUT W/INSERT	122.1420.35	1 EA
14	1/4 STANDARD FLAT WASHER	123.8314.60	1 EA	28	6-32 X 1/2" SOCKET SET SCREW	124.0632.0846	2 EA
				29	6 X 5/8 TYPE A PHLPS PH SHT MET SCREW	126.2090.659	8 EA

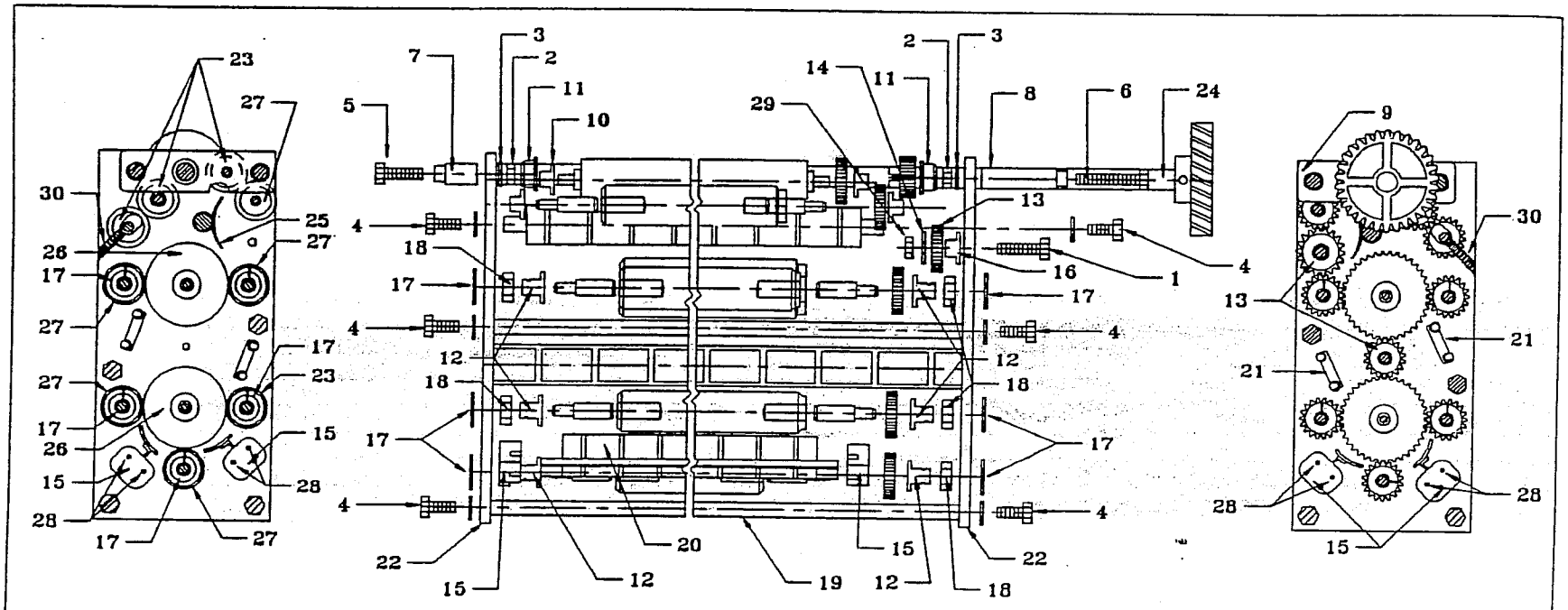

ALPHATEK
CORPORATION

NAME OF PART: AX390SE DEVELOPER RACK ASSEMBLY	PART NUMBER: 5543.350.01	REV # 20	DATE OF REV: 9581	BY: FKC	FOR USE IN: AX350/AX390 SE

LEGEND =

ITEM #	DESCRIPTION	PART NUMBER	QUANTITY	ITEM #	DESCRIPTION	PART NUMBER	QUANTITY
1	1/4-20 X 1" HEX HEAD BOLT	127.4042.0084	2 EA	16	IDLER GEAR FITTING	4153.600.10	2 EA
2	1/4"-20 18-8 HEXNUT (NO INSERT)	122.1420.95	4 EA	17	GROMMER MOUNT WASHER	4158.600.04	10 EA
3	1/4" MED SPLIT LOCKWASHER 18-8	123.4142.10	6 EA	18	RUBBER GROMMET	4167.600.08	10 EA
4	1/4"-20 X 5/8" HEX HEAD BOLT	127.4042.0054	10 EA	19	TIE BAR	4214.600.07	4 EA
5	1/4"-20 X 1-1/2" HEX HEAD BOLT	127.4042.0124	2 EA	20	STAINLESS STEEL CROSSOVER GUIDE	4242.600.03	2 EA
6	1/4"-20 X 2-1/2 HEX HEAD BOLT	127.4042.0204	2 EA	21	LADDER GUIDE	4253.600.03	2 EA
7	RACK SUPPORT PIN - SMALL	4121.600.04	2 EA	22	DEVELOPER SIDE PLATE	4459.350.01	2 EA
8	RACK SUPPORT PIN - LARGE	4121.600.05	2 EA	23	SQUEEGEE ROLLER ASSEMBLY	5236.600.01	4 EA
9	DEVELOPER BOOSTER PLATE	4144.700.01	2 EA	24	RACK DRIVE SHAFT ASSEMBLY	5236.600.06	1 EA
10	SMALL ROLLER BEARING	4152.600.02	12 EA	25	INNER RACK GUIDE	4242.700.04	1 EA
11	LARGE ROLLER BEARING	4152.600.03	2 EA	26	LARGE ROLLER ASSEMBLY	5262.600.06	2 EA
12	GROMMET MT ROLLER BEARING	4152.600.05	10 EA	27	SMALL ROLLER ASSEMBLY	5262.600.07	5 EA
13	GEAR SMALL 1/2" BORE	4153.600.04	2 EA	28	6 X 5/8 TYPE A PHLPS PH SHT MET SCREW	126.2090.659	8 EA
14	1/4 STANDARD FLAT WASHER	123.8314.60	2 EA	29	1/4-20 316 SS LOCKNUT W/INSERT	122.1420.35	2 EA
15	CROSSOVER SUPPORT	4153.600.09	4 EA	30	6/32 X 1/2" SOCKET SET SCREW	124.0632.0846	2 EA

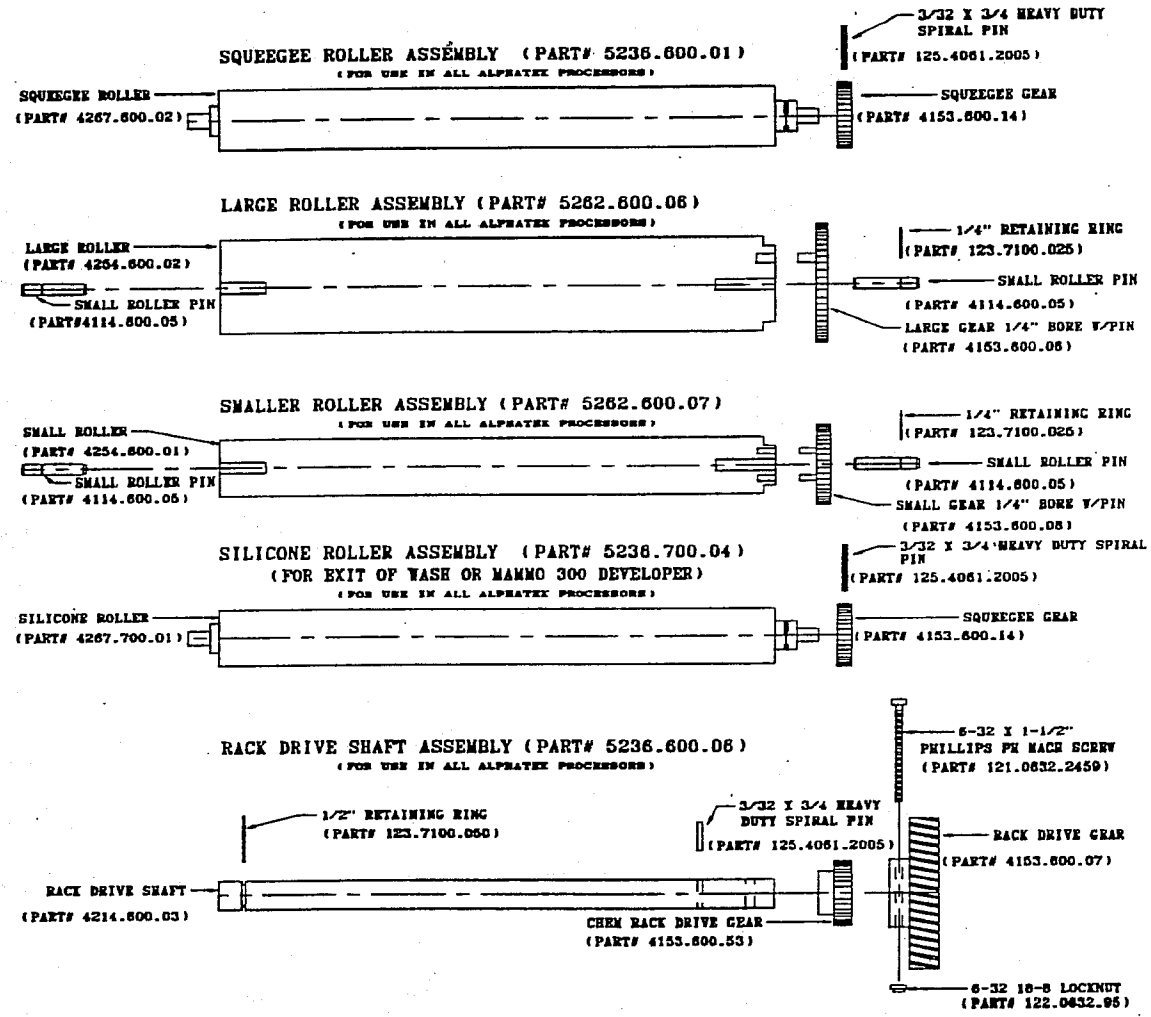

REV.	DATE	DRG.	APP.	TRANSPORT ROLLER & SHAFT BREAKDOWN		9150.300.01
0	9500					
1	9581	FKC				
2						
3						ALPHATEK CORPORATION
4						
5				MAT:	FINISH:	
6						

TOLERANCES-UNLESS OTHERWISE SPECIFIED: LENGTH-DECIMALS ±.010" -FRACTIONS ±1/32" DIAMETERS-DECIMALS ±.002" -FRACTIONS ±.005"