POTEL
Believe in serving

Rotary Miniature Angle Sensor

RHSS-12

The Rotary Miniature Angle Sensor is used to detect the angle or speed of system which correspondence to the rotary motion of the shaft of the sensor.

The Output signal correspondence to 0 to 360deg. This full range is programmable based on requirement.

Since the Product is based on Contactless **Magnetic Technology** it has very long life.

Endless Rotary sensor can be specially programmed to have 4,3 or 2 cycles in over revolution hence increasing the accuracy.

For modern microcontrollers RHSS-12 is capable to give output in 0 to 3.3Vdc,SPI, I2C, Quadrature, Incremental and to suppress the effect of Noise PWM output version is also available.

With wide range of Mechanical and electrica variant makes it a ideal product for the industry.

Variants

12 bit resolution 0 to 3.3Vdc Analog Ratio matric Output.
12 bit resolution 0 to 5Vdc Analog Ratio matric Output.
12 bit resolution 0 to 5Vdc Analog Ratio matric Dual Output.
12 bit resolution PWM Output.
14 Bit resolution in 16bit transmission SPI output.
14 bit resolution in 8bit transmission in I2C output.
Upto 512 PPR in one revolution Low speed Quadrature output.
Upto 1024 PPR in one revolution incremental output.
Sleeve bushing, Servo Mount, Flange Mount and Ball Bearing versions.
Connectors or shielded cable available.
IP 69k Protection available.

Benefits

Non Contact Rotary Position Sensor based on Hall Effect Tenology.
Accurate Linearity upto 1% F.S. or 0.5% F.S (on request)
Extremely Long Life.
Extremely Compact in Size.
Angle programmable based on customer specific requirement.
Short Circuit Protected. (For 5Vdc and PWM output versions).
Overvoltage protected. (For 5Vdc and PWM output versions).
Reverse polarity protected. (For 5Vdc and PWM output versions).

POTEL
Believe in serving

POT-TECH Electronics(Bombay) Pvt. Ltd.
12-Ichcha Estate, Abrama, Valsad-396001. Gujarat. INDIA.
www.potentiometer.co.in // info.potentiometer@gmail.com
Tel : +91-2632-227780 mob: +91-9998700754

POTEL
Believe in serving

Rotary Miniature Angle Sensor

Mechanical

RoHS COMPLIANT

RHSS-12

Ball Bearing

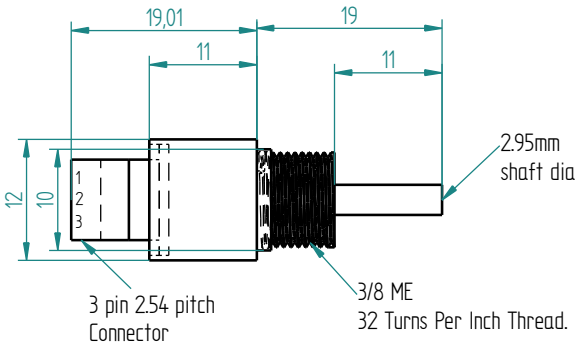

Sleeve Bearing

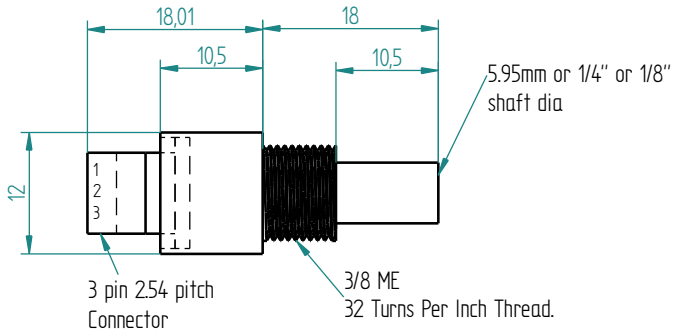

For Detailed Drawing on Sensor with Servo Mount Please drop a E-mail on pavankinariwala@gmail.com

For SPI, I2C, Quadrature, Incremental and Redundant output version sensor comes along with Fly wire output.

Shaft Customization is possible.

Tight Motion of shaft is possible.

parameters	Ball Bearing	Sleeve Bushing
Starting Torque	8 gms. cm	150 gms. cm
Maximul Radial Load	900 gms	470 gms
Maximum Axial Load	Nil	Nil
Maximum Shaft Speed	1500 RPM	100 RPM
Bearing Life cycles	500 X 10^6 @rated radial Load	20 X 10^6 @rated radial Load
Weight of sensor	12 gms	12 gms
Shaft Dia	2.95mm	3.15mm or 6 mm or 6.3 mm

POTEL
Believe in serving

POT-TECH Electronics(Bombay) Pvt. Ltd.
12-Ichcha Estate, Abrama, Valsad-396001. Gujarat. INDIA.
www.potentiometer.co.in // info.potentiometer@gmail.com
Tel : +91-2632-227780 mob: +91-9998700754

POTEL
Believe in serving

Rotary Miniature Angle Sensor

RoHS COMPLIANT

RHSS-12

Electircal Analog Output

OPTION 1

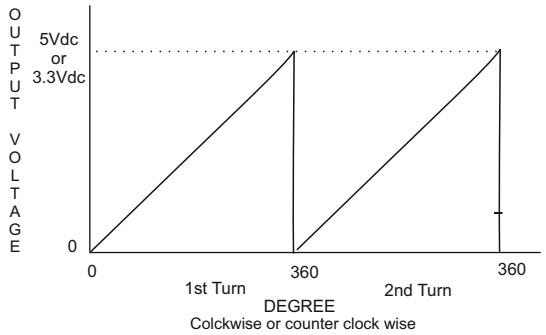

	Screw Connector	Shielded Cable
Vsupply	Pin 1	Brown/ Red
Ground	Pin 2	Green
Output	Pin 3	White / Yellow

OPTION 2
4 cycles in one Revolution

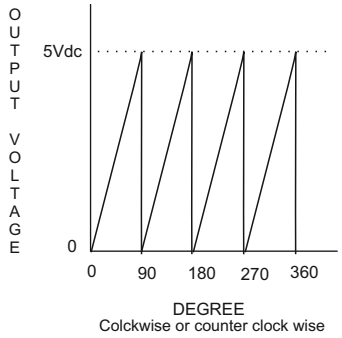

OPTION 3
2 cycles in one Revolution

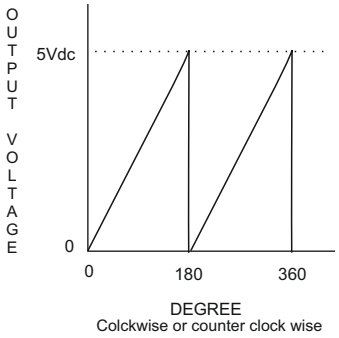

OPTION 4
3 cycles in one Revolution

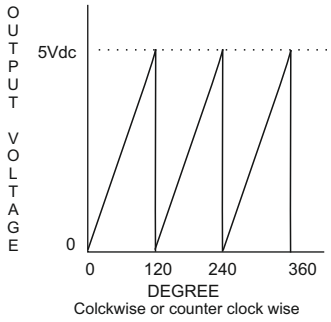

Paameters	Results
Supply Voltage (Vsupply)	5Vdc(+/- 10%) or 3.3Vdc
Supply Current	20mA
Response time	50mS
Resolution	12bit
Load Resistance	Minimum 10k ohms
Output (Voutput)	3% to 97% Vsupply (Ratiomatric)
Linearity	1% Independent Linearity (Available 0.5% on request)

POTEL
Believe in serving

POT-TECH Electronics(Bombay) Pvt. Ltd.
12-Ichcha Estate, Abrama, Valsad-396001. Gujarat. INDIA.
www.potentiometer.co.in // info.potentiometer@gmail.com
Tel : +91-2632-227780 mob: +91-9998700754

POTEL
Believe in serving

Rotary Miniature Angle Sensor

RoHS COMPLIANT

RHSS-12

Mounting

For best performance of RHSS-12 below points needs to be taken into consideration.

1) The hole in the panel should not be more than 9.5mm.
2) RHSS-12 should be mounted with Star washer given along with the product and perpendicularity between the panel and axis of Sensor should be maintained.

Magnetic Cross Talk

If two RHSS-12 units are to be installed closer than 2 inch (measured between the center of both shafts), a magnetic shield, such as a small steel plate should be installed in between to prevent one encoder from causing small changes in reported position through magnetic field cross-talk.

Material

Component	Material
Housing	Brass
Shaft	Stainless
Ball Bearing	Stainless

Environment

Parameter	Value
Operating Temperature	-40 to 75 deg (standard) -40 to 140 deg (on request)
Storage Temperature	-40 to 75 degC
Vibration	20g.

Ordering Information

RHSS-12 - I/p Voltage - Output range or type - angle - direction - shaft dia - XXX Any specific Inf

I/p Voltage	Output range or type	angle	direction	shaft dia	XXX
5 - For 5Vdc	05- 0 to 5Vdc	360 for endless	CW (default)	6 - 6mm dia	conn - connector
3 - For 3.3Vdc	03 - 0 to 3.3Vdc	else specify	CCW	6.3 - 6.3mm dia	cab - cable
	PWM200 - for 3.3Vdc with 200Hz			3.15 - 3.15mm dia	
	SPI - SPI output			3 - 3mm dia	
	I2C- I2C Output				
	INC - incremental Output				

For Example: RHSS12-505-360-CW-6-conn

POTEL
Believe in serving

POT-TECH Electronics(Bombay) Pvt. Ltd.
12-Ichcha Estate, Abrama, Valsad-396001. Gujarat. INDIA.
www.potentiometer.co.in // info.potentiometer@gmail.com
Tel : +91-2632-227780 mob: +91-9998700754

POTEL
Believe in serving

Rotary Miniature Angle Sensor

VARIANTS

RoHS COMPLIANT

RHSS-12

Standard model with 6.3mm shaft dia and Flywire

Ball Bearing version with 3mm shaft dia

Ball Bearing Servo Mount version with 3mm shaft dia

POTEL
Believe in serving

POT-TECH Electronics(Bombay) Pvt. Ltd.
12-Ichcha Estate, Abrama, Valsad-396001. Gujarat. INDIA.
www.potentiometer.co.in // info.potentiometer@gmail.com
Tel : +91-2632-227780 mob: +91-9998700754