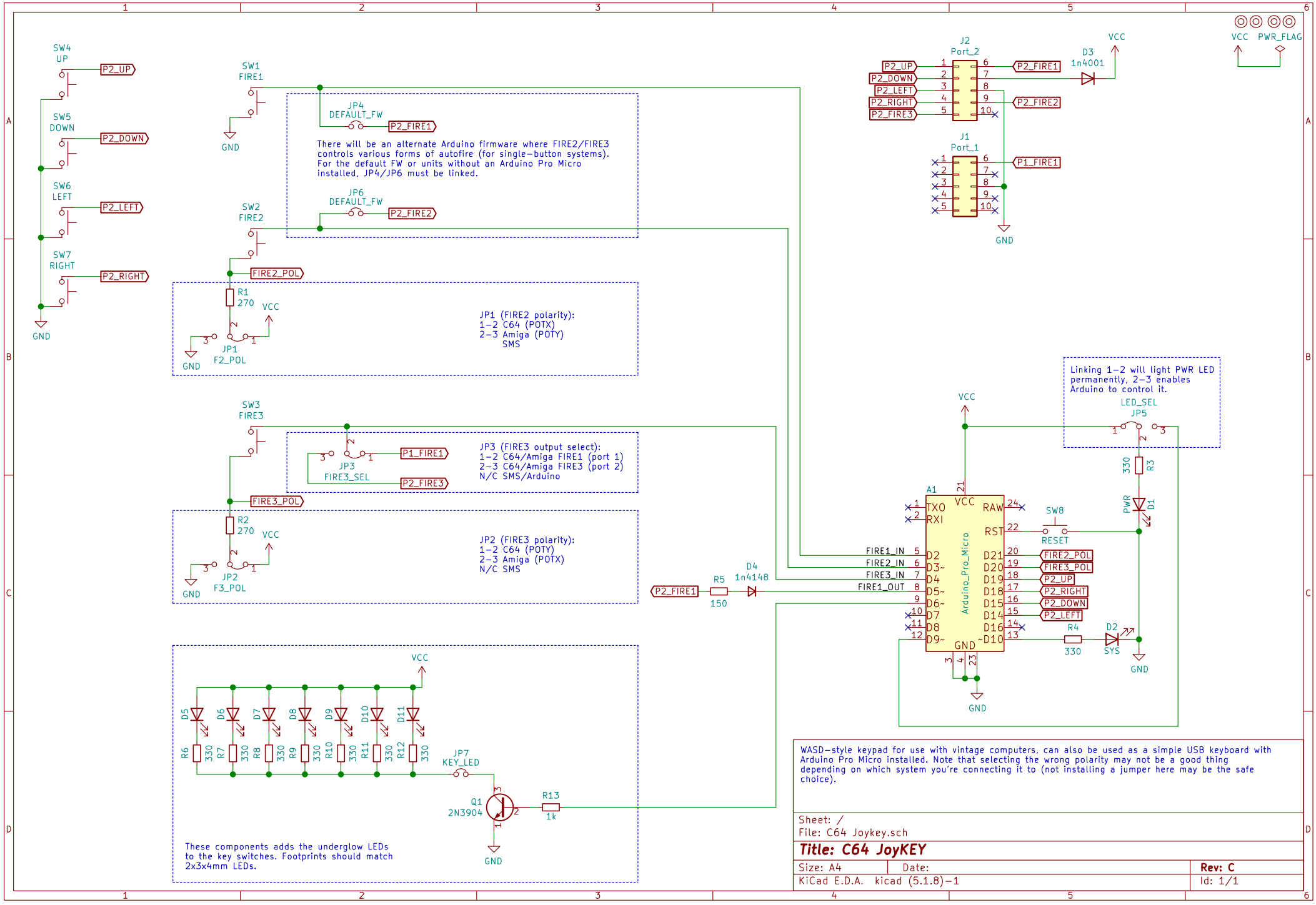
SW4 UP
SW5 DOWN
SW6 LEFT
SW7 RIGHT
P2_UP
P2_DOWN
P2_LEFT
P2_RIGHT
GND
SW1 FIRE1
SW2 FIRE2
SW3 FIRE3
JP4 DEFAULT_FW
JP6 DEFAULT_FW
P2_FIRE1
P2_FIRE2
There will be an alternate Arduino firmware where FIRE2/FIRE3 controls various forms of autofire (for single-button systems). For the default FW or units without an Arduino Pro Micro installed, JP4/JP6 must be linked.
FIRE2_POL
R1 270
VCC
JP1 F2_POL
JP1 (FIRE2 polarity):
1-2 C64 (POTX)
2-3 Amiga (POTY)
SMS
JP3 FIRE3_SEL
P1_FIRE1
P2_FIRE3
JP3 (FIRE3 output select):
1-2 C64/Amiga FIRE1 (port 1)
2-3 C64/Amiga FIRE3 (port 2)
N/C SMS/Arduino
FIRE3_POL
R2 270
JP2 F3_POL
JP2 (FIRE3 polarity):
1-2 C64 (POTY)
2-3 Amiga (POTX)
N/C SMS
D5 D6 D7 D8 D9 D10 D11
R6 R7 R8 R9 R10 R11 R12 330
JP7 KEY_LED
Q1 2N3904
R13 1k
These components adds the underglow LEDs to the key switches. Footprints should match 2x3x4mm LEDs.
J2 Port_2
J1 Port_1
P2_FIRE2
P1_FIRE1
D3 1n4001
VCC
PWR_FLAG
P2_FIRE1
R5 150
D4 1n4148
A1 Arduino_Pro_Micro
TXO
RXI
RAW
RST
FIRE1_IN
FIRE2_IN
FIRE3_IN
FIRE1_OUT
D2
D3~
D4
D5~
D6~
D7
D8
D9~
D21
D20
D19
D18
D15
D14
D16
~D10
FIRE2_POL
FIRE3_POL
P2_UP
P2_RIGHT
P2_DOWN
P2_LEFT
SW8 RESET
R4 330
D2 SYS
Linking 1-2 will light PWR LED permanently, 2-3 enables Arduino to control it.
LED_SEL JP5
R3 330
PWR D1
WASD-style keypad for use with vintage computers, can also be used as a simple USB keyboard with Arduino Pro Micro installed. Note that selecting the wrong polarity may not be a good thing depending on which system you're connecting it to (not installing a jumper here may be the safe choice).
Sheet: /
File: C64 Joykey.sch
Title: C64 JoyKEY
Size: A4
Date:
Rev: C
KiCad E.D.A. kicad (5.1.8)-1
Id: 1/1