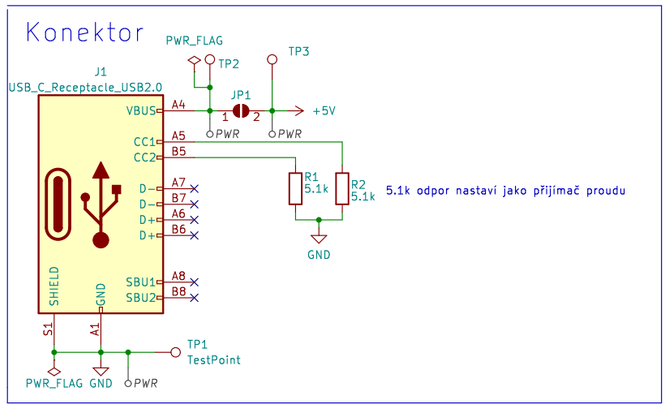

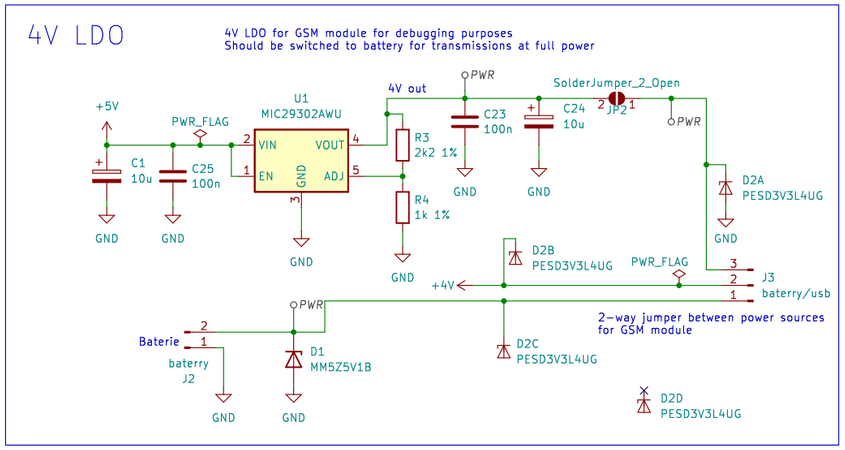

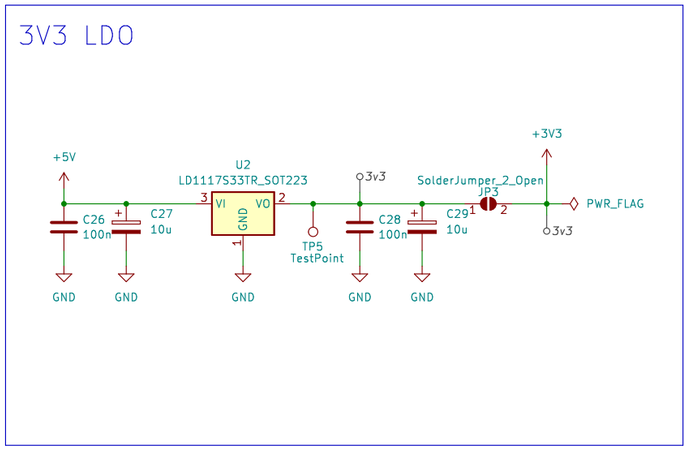

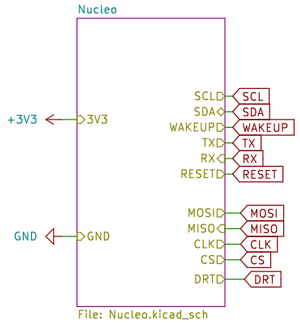

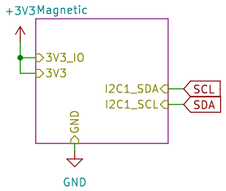

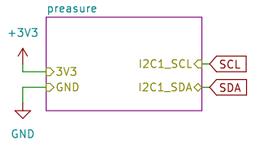

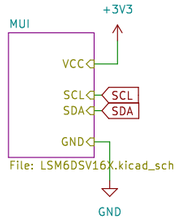

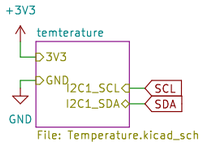

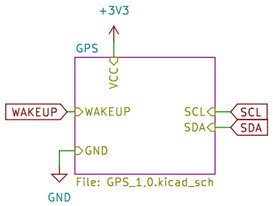

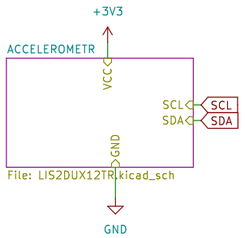

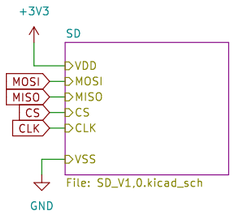

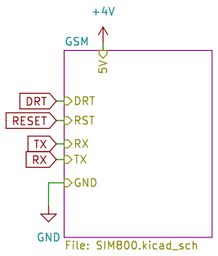

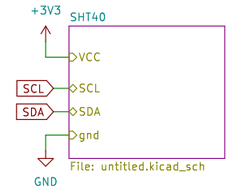

Michal Hosek, Ales Zapadlo, Tomas Ehrenberger
CTU Space Research

Sheet: /
File: PCB V1.0.kicad_sch

Title: Stratoballoon Board A

Size: A3	Date: 2024-02-11	**Rev: 1.0**
KiCad E.D.A. kicad 7.0.9		Id: 1/11

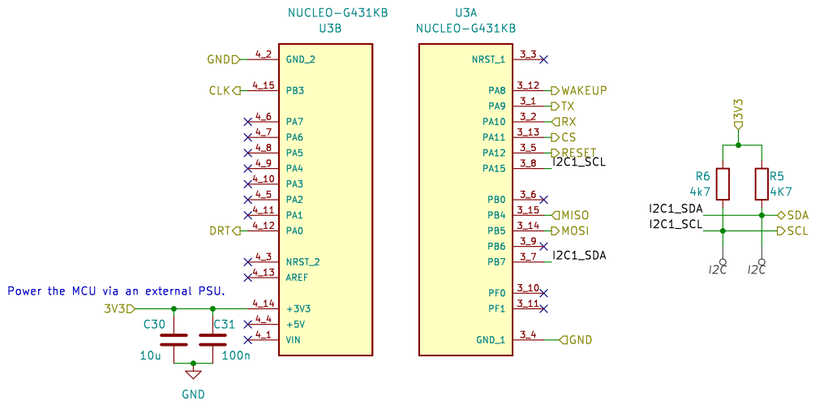

Sheet: /Nucleo/
File: Nucleo.kicad_sch

Title:

Size: A3	Date:	Rev:
KiCad E.D.A. kicad 7.0.9		Id: 2/11

I2C adresa:
0X3D/0X3C
read/write

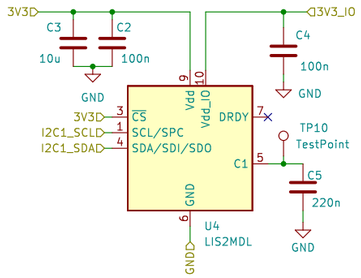

Sheet: /Magnetic/
File: magnetic.kicad_sch

Title:

Size: A3	Date:	Rev:
KiCad E.D.A. kicad 7.0.9		Id: 3/11

I2C adresa:
0xB9/0xB8
read/write

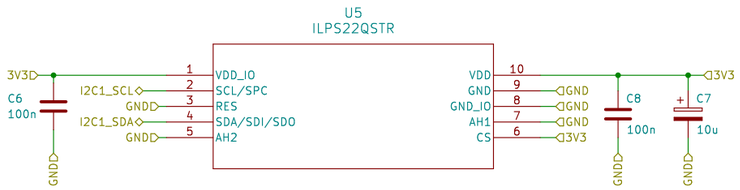

Sheet: /preasure/
File: pressure.kicad_sch

Title:

Size: A3	Date:	Rev:
KiCad E.D.A. kicad 7.0.9		Id: 4/11

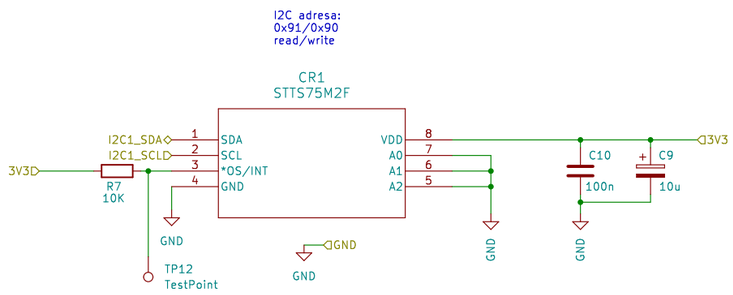

Sheet: /temterature/
File: Temperature.kicad_sch

Title:

Size: A3	Date:	Rev:
KiCad E.D.A. kicad 7.0.9		Id: 5/11

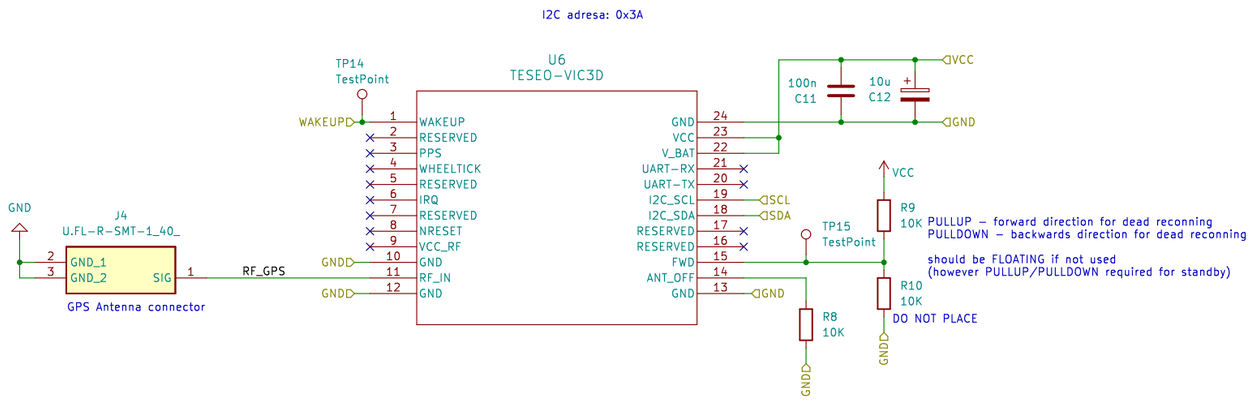

Sheet: /GPS/
File: GPS_1,0.kicad_sch

Title:

Size: A3	Date:	Rev:
KiCad E.D.A. kicad 7.0.9		Id: 6/11

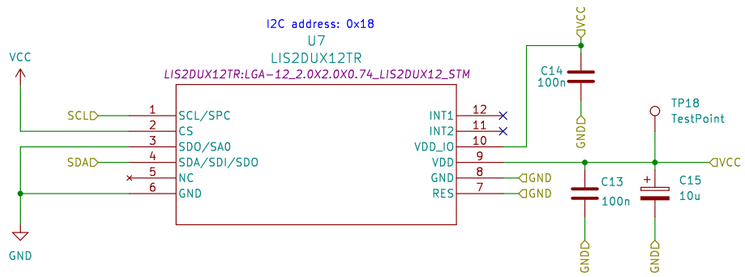

Sheet: /ACCELEROMETR/
File: LIS2DUX12TR.kicad_sch

Title:

Size: A3	Date:	Rev:
KiCad E.D.A. kicad 7.0.9		Id: 8/11

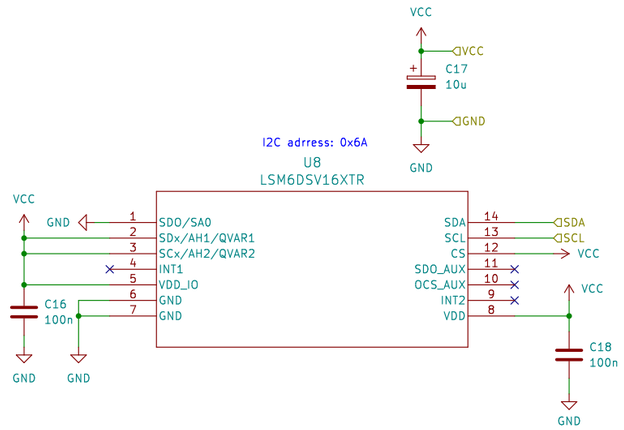

Sheet: /MUI/
File: LSM6DSV16X.kicad_sch

Title:

Size: A3	Date:	Rev:
KiCad E.D.A. kicad 7.0.9		Id: 9/11

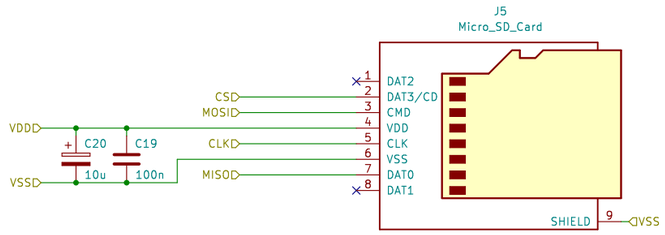

Sheet: /SD/
File: SD_V1.0.kicad_sch

Title:

Size: A3	Date:	Rev:
KiCad E.D.A. kicad 7.0.9		Id: 10/11

I2C adresa: 0x44

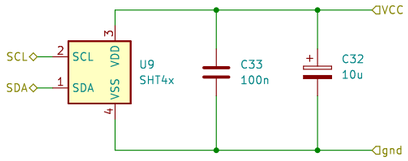

Sheet: /SHT40/
File: untitled.kicad_sch

Title:

Size: A3	Date:	Rev:
KiCad E.D.A. kicad 7.0.9		Id: 11/11

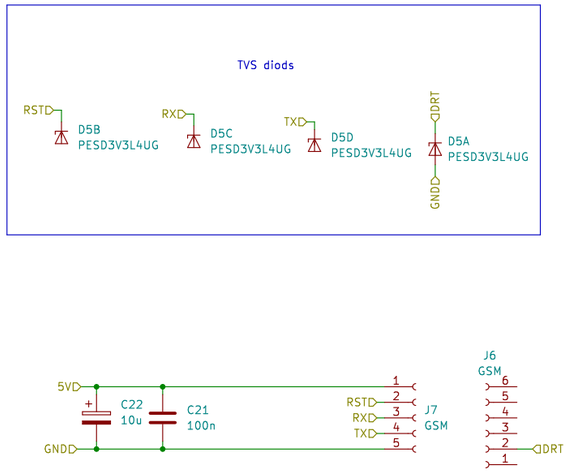

Sheet: /GSM/
File: SIM800.kicad_sch

Title:

Size: A3	Date:	**Rev:**
KiCad E.D.A. kicad 7.0.9		Id: 11/11