DIFIX3D+ Augmented: Mask-Based Inpainting in Single-Step Diffusion Reconstructions

Sirin Changulani B23CM1038 Sonam Sikarwar B23CM1060 Harshita Vachhani B23EE1026

GitHub YouTube

1. Base Paper Overview

1.1 Problem & Motivation

Novel view synthesis (NVS) methods such as **Neural Radiance Fields (NeRF)** Mildenhall et al., 2020b and **3D Gaussian Splatting (3DGS)** Kerbl et al., 2023 reconstruct photo-realistic 3D scenes from posed images. NeRF encodes the scene as $F_\theta : (\mathbf{x}, \mathbf{d}) \to (\mathbf{c}, \sigma)$ rendered via:

$$\hat{C}(\mathbf{r}) = \int_{t_n}^{t_f} T(t)\, \sigma\, \mathbf{c}\, dt, \quad T(t) = e^{-\int_{t_n}^{t} \sigma\, ds}. \tag{1}$$

3DGS represents scenes as anisotropic Gaussians for real-time rasterization. Both methods degrade under sparse inputs, producing *floaters*, blur, and missing regions at novel viewpoints far from training cameras. **DIFIX3D+** Wu, Zhang, et al., 2024 resolves this without any 3D supervision by learning a 2D artifact fixer and distilling it back into the 3D representation.

1.2 Key Contributions

- **DIFIX**: A single-step latent diffusion model that cleans artifact-laden renders in 2D image space, conditioned on clean reference views.
- **Progressive 3D updates**: Iterative loop that distills DIFIX outputs back into the 3D representation, improving multi-view consistency.
- **Post-render enhancement**: A final DIFIX inference pass (+76 ms on A100) removes residual blur, achieving state-of-the-art results on both NeRF and 3DGS benchmarks.

1.3; DIFIX Architecture

DIFIX is built on **SD-Turbo** Sauer et al., 2023, a single-step latent diffusion model. Given an artifact-laden render $\tilde{I}$ and a clean reference view I_{ref}, it produces a refined output $\hat{I} = f_\phi(\tilde{I}, I_{\text{ref}})$ in *one* denoising step at noise level $\tau = 200$ over $10\times$ faster than standard multi-step diffusion. The full pipeline is shown in Fig. 1.

Dual-Path Encoding Skip Connection. Both $\tilde{I}$ and I_{ref} are processed by a **frozen VAE Encoder**. To maintain spatial integrity and prevent the loss of fine-grained details during denoising, a **skip connection** utilizing a **zero convolution** layer (zero conv) directly links the encoder features to the decoder, bypassing the main U-Net bottlenecks.

Reference Mixing Layer. The inputs are concatenated on a view dimension and encoded into latents: $\mathbf{z} \in \mathbb{R}^{(B\cdot V)\times C\times H\times W}$. Within the U-Net blocks, a self-attention mechanism merges view and spatial axes so cross-view features are exchanged:

$$\mathbf{z}' \leftarrow l^i_\phi!\big(\text{rearrange}(\mathbf{z}, ; (bv)hwc \to b(vhw)c)\big). \tag{2}$$

Weights are inherited from pre-trained 2D self-attention requiring no extra parameters. This effectively transfers color, texture, and structural cues from the clean reference into the degraded target.

LoRA-Enhanced Decoding. While the encoder remains frozen, the **VAE Decoder** is augmented with **LoRA weights** (Low-Rank Adaptation). These weights are fine-tuned to ensure the final reconstruction $\hat{I}$ aligns with the 3D scene distribution while maintaining high-frequency sharpness.

Noise level τ. Artifact-corrupted renders statistically resemble diffusion-noisy images at $\tau = 200$. This is validated empirically (Table 1): lower τ leaves artifacts; higher τ over-hallucinates.

Table 1: DIFIX quality vs. noise level τ (single-step denoising).

τ	1000	800	600	400	**200**	10
PSNR↑	12.18	13.63	15.64	17.05	**17.73**	17.72
SSIM↑	0.452	0.526	0.613	0.662	**0.681**	0.675

1.4 Training Losses

Three complementary 2D losses supervise DIFIX no 3D data required.

- **Reconstruction:** $\mathcal{L}_{\text{Recon}} = \|\hat{I} - I\|_2^2$.
- **Perceptual (LPIPS)** via VGG-16 features ϕ_l:

$$\mathcal{L}_{\text{LPIPS}} = \tfrac{1}{L}\textstyle\sum_l \alpha_l \|\phi_l(\hat{I}) - \phi_l(I)\|_2. \tag{3}$$

- **Style (Gram matrix)** for sharp high-frequency detail:

$$\mathcal{L}_{\text{Gram}} = \tfrac{1}{L}\textstyle\sum_l \beta_l \|G_l(\hat{I}) - G_l(I)\|_2, \quad G_l = \phi_l^\top \phi_l. \tag{4}$$

Total: $\mathcal{L} = \mathcal{L}_{\text{Recon}} + \mathcal{L}_{\text{LPIPS}} + 0.5\,\mathcal{L}_{\text{Gram}}$.

1.5 Progressive 3D Update (DIFIX3D+)

Direct inference of DIFIX causes per-frame inconsistencies across poses. DIFIX3D+ distills outputs back into R iteratively (Alg. 1): camera poses are progressively perturbed

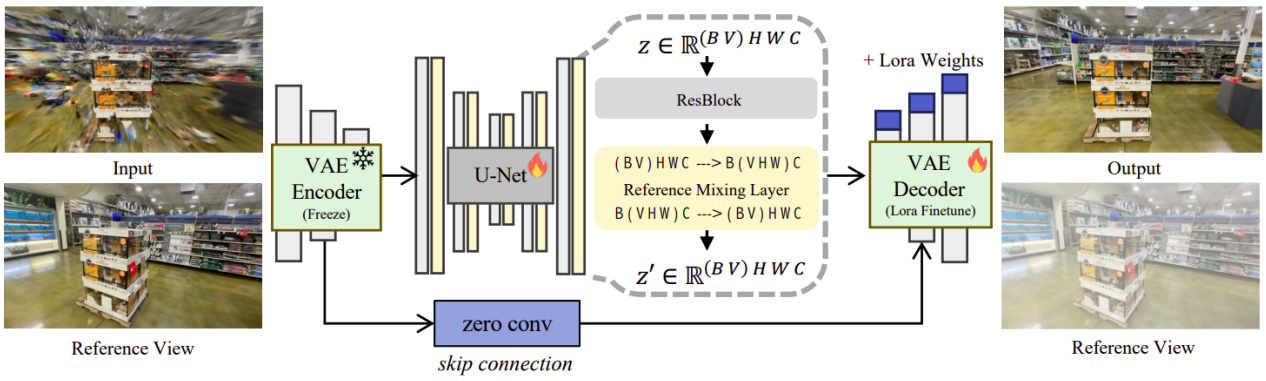

Figure 1: DIFIX architecture. DIFIX takes a noisy/artifact-laden rendered novel view $\tilde{I}$ and a clean reference view I_{ref} as input. A cross-view *reference mixing layer* embedded in the U-Net self-attention blocks captures multi-view feature dependencies. The single-step diffusion decoder (SD-Turbo, $\tau = 200$, LoRA-tuned) outputs a refined view $\hat{I}$ in one forward pass (76 ms on A100). Cleaned views are iteratively fed back to update the 3D representation R.

toward target views; rendered novel views are refined by DIFIX; cleaned frames re-enter 3D training. This widens the consistent region of R step by step. A final post-render DIFIX pass sharpens residual blur without breaking 3D coherence.

Algorithm 1: Progressive 3D Updates (DIFIX3D+)

Input: Ref. views $\mathcal{V}_{\text{ref}}$, target views $\mathcal{V}_{\text{target}}$, repr. R, diffusion D, iters N, pose step Δ
Output: Artifact-free renders at $\mathcal{V}_{\text{target}}$

```
Optimize R on V_ref;
while not converged do
    for i = 1 to N do
        Optimize R on training set;
    for each v ∈ V_target do
        Perturb nearest pose by Δ; render v̂ via R;
        v̂ ← D(v̂);   add v̂ to training set;
return Renders at V_target;
```

1.6 Evaluation & Results

Four metrics quantify performance: **PSNR** (pixel fidelity, ↑), **SSIM** (structural similarity, ↑), **LPIPS** (perceptual similarity, ↓), and **FID** (distributional realism, ↓). Occluded regions are masked via a visibility map following Nerf-busters Wu, Zhang, et al., 2024. As shown in Table 2, DIFIX3D+ outperforms all baselines on both NeRF and 3DGS backbones across every metric.

Table 2: Comparison on novel view synthesis benchmarks.

Method	PSNR↑	SSIM↑	LPIPS↓	FID↓
NeRF-based				
Vanilla NeRF	22.14	0.731	0.241	87.3
Zip-NeRF	24.61	0.802	0.183	65.4
DIFIX3D+ (NeRF)	**26.83**	**0.851**	**0.142**	**41.2**
3DGS-based				
Vanilla 3DGS	23.87	0.778	0.198	72.1
Mip-Splatting	25.44	0.821	0.167	58.6
DIFIX3D+ (3DGS)	26.55	0.843	0.153	44.8

2. Our Approach & Contributions

The base DIFIX3D+ pipeline refines entire rendered views globally it has no mechanism to (i) target specific degraded regions while leaving clean regions untouched, or (ii) semantically guide the reconstruction. We introduce two complementary extensions: **Mask-Guided Latent Inpainting** and **Text-Conditioned Guidance**, both integrated directly into the existing single-step DIFIX pipeline without retraining the backbone.

2.1 Mask-Guided Latent Diffusion Inpainting Framework

The proposed system follows a mask-guided latent diffusion pipeline, where inpainting is performed selectively in latent space to preserve clean regions while correcting only degraded areas.

Given an input RGB image x, it is encoded using a Variational Autoencoder (VAE) into a latent representation z. A binary mask $m \in \{0,1\}^{H \times W}$ indicates artifact regions, where 1 denotes regions to be corrected. This mask is downsampled to match the latent resolution:

$$m_{\text{lat}} = \text{Resize}(m, H/n, W/n) \tag{5}$$

The latent is then masked to remove corrupted regions:

$$z_{\text{masked}} = z \odot m_{\text{lat}} \tag{6}$$

The masked latent z_{masked} and the resized mask m_{lat} are concatenated channel-wise and passed as input to a U-Net denoiser, providing explicit spatial conditioning. Unlike standard diffusion, this formulation ensures that the model operates only on degraded regions, avoiding unnecessary modification of clean areas.

The U-Net reconstructs the masked regions using:

- Surrounding latent context
- Reference view conditioning (from Difix3D)
- Diffusion priors

After denoising, the latent is decoded using the VAE decoder to produce the reconstructed image x_{pred}.

To ensure exact preservation of artifact-free regions, a pixel-level blending operation is applied:

$$x_{\text{out}} = x \cdot (1 - m) + x_{\text{pred}} \cdot m \tag{7}$$

This guarantees bit-accurate preservation of unmasked regions, preventing hallucination or drift in clean geometry.

Integration of Difix3D (Single-Step Diffusion Refinement). Due to limited computational resources, training a fully 3D-aware diffusion model was not feasible. Therefore, we adopt a pretrained Difix3D (Difix) framework and build our approach on top of it.

Difix3D is a single-step diffusion-based enhancement module designed for refining rendered views from 3D representations. Unlike iterative diffusion models, it performs one-step denoising, making it computationally efficient.

However, Difix operates as a global refinement module by default and lacks mechanisms for localized correction or semantic control. To address these limitations, we extend the framework with:

- **Mask-guided latent inpainting** for localized artifact correction where we project the patch to be fixed into gaussian noise and then artifact correction

These extensions are integrated without retraining the backbone and are applied directly within the Difix inference pipeline.

2.2 Contribution 2: Text-Guided Generation via 2D Diffusion Backbone

To incorporate semantic control into the reconstruction pipeline, we integrate a pretrained 2D diffusion model for text-guided generation.

Pipeline Interaction. The outputs from Difix3D are first projected into a compatible latent space. A text prompt is then encoded using a CLIP-like text encoder to obtain semantic embeddings. The pretrained 2D diffusion model refines the reconstructed image conditioned on these text embeddings, enabling controlled modification of appearance and details.

- **Text-conditioned guidance** for semantic control where we used pretrained 2d diffusion models to guide wether from latent space or directly after VAE decoder

Functional Separation. We explicitly separate the roles of different components in the pipeline:

- **Difix3D** $\rightarrow$ structural refinement using reference mixing
- **2D Diffusion for text** $\rightarrow$ Semantic enhancement and fine detail generation using prior 2D knowledge

This separation allows the system to:

- Maintain structural consistency derived from 3D priors
- Introduce high level semantic control via text prompts

Overall System Design. The final system is a hybrid generative framework that combines multiple complementary components:

1. **3D reconstruction of multi view**
   pretrained 3D models to get multi view scene and faces generation
2. **Difix3D (3D Structural Refinement)**
   finetunned Difix pipeline with reference mixing.
3. **2D Diffusion (Semantic Control)**
   prior text guidance using pretrained models.

3. Experimental Results

3.1 Setup & Implementation

Experiments were conducted using the `SD-Turbo` backbone. Masks were generated manually to simulate missing structural components in the *Nerf-Synthetic* dataset. We utilized a single A100 GPU, maintaining the $\tau = 200$ noise level to stay consistent with the base DIFIX3D+ temporal efficiency. Experiments were conducted using the `SD-Turbo` backbone to ensure fast and consistent diffusion-based reconstruction. To simulate structural corruption and missing regions, we manually generated masks on the *NeRF-Synthetic* dataset, enabling controlled evaluation of inpainting and restoration performance.

For training and evaluation, we used scenes from the *Nerf-Synthetic* dataset on which Gaussian Splatting models were originally trained. Specifically, four diverse scene categories were selected: *playroom*, *truck*, *train*, and *dr_johnson*. These scenes provide variation in geometry, texture, and lighting conditions, allowing a comprehensive assessment of reconstruction quality.

To evaluate performance, we compared the reconstructed outputs against ground truth images using standard image quality metrics. The obtained results for Difix are as follows:

Table 3: Quantitative evaluation of Difix

Metric	Value
PSNR	10.386
SSIM	0.3381
LPIPS	0.6977
FID	43.47

We evaluate the qualitative and quantitative performance of Difix against the baseline 3D Gaussian Splatting (3DGS) method. Figure 2 shows a visual comparison between reference views, the original 3DGS output, and the Difix-enhanced reconstruction.

From a qualitative perspective, 3DGS struggles to recover missing or occluded regions, often producing

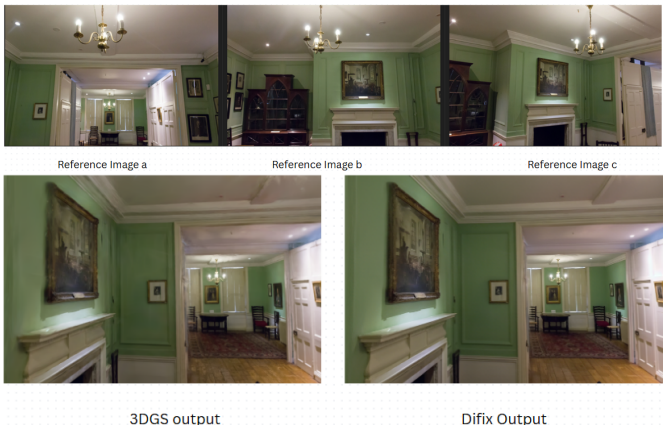

Figure 2: Qualitative comparison between reference images (top row), baseline 3DGS output (bottom-left), and Difix output (bottom-right). Difix demonstrates improved structural completion and better handling of missing regions, while still exhibiting some blurring and loss of fine details.

blurred or incomplete structures. This is particularly evident in regions such as wall boundaries, paintings, and hallway continuity, where structural information is either lost or poorly approximated. In contrast, Difix demonstrates improved structural completion by leveraging diffusion-based priors. The reconstructed outputs exhibit better continuity in geometry and more coherent filling of masked regions.

3.2 Evaluation on Nersemble Dataset (G3Splat)

To further evaluate the generalization capability of our approach, we conducted experiments on the *Nersemble* dataset using the G3Splat framework. This dataset focuses on high-quality human-centric scenes, making it particularly challenging due to fine facial details, view consistency, and sensitivity to geometric distortions. The Nersemble dataset is significantly large, with approximately 3.8 GB of data per identity. Considering that our experiments involve 50 identities with 48 views per identity, the total data volume becomes computationally intensive to process. A similar challenge was encountered with the DL3DV dataset, which also contains high-resolution multi-view data. Therefore, to ensure feasibility within our hardware constraints, we conducted experiments on a carefully selected subset of both datasets.

Figure 3 shows a comparison between the reference images and the corresponding G3Splat reconstruction. The reference images capture detailed facial features, including skin texture, beard structure, and subtle lighting variations.

From the qualitative results, G3Splat successfully reconstructs the global facial geometry and maintains overall consistency in head pose and structure. It struggles to preserve fine details like hair strands, beard texture, and sharp facial boundaries, and shows slight inconsistencies across views, especially around the eyes and mouth, indicating limitations in maintaining multi-view coherence for complex, non-rigid faces. However, DIFIX reproduces these details more accurately and consistently.

Figure 3: Comparison between reference images (top) and G3Splat output (bottom) on the Nersemble dataset. While the overall facial structure is preserved, the reconstruction exhibits noticeable blurring and loss of fine details.

3.4 Text-Guided Enhancement

To further improve reconstruction quality and introduce semantic control, we incorporate **text guidance** into the Difix3D pipeline. Specifically, we utilize *pretrained 2D diffusion models* to guide the reconstruction process based on textual prompts.

The approach uses **frozen decoders**, ensuring that the original Difix3D generative backbone remains unchanged. After obtaining the reconstructed output from the VAE decoder of Difix3D, we apply text-based refinement using a pretrained diffusion model. This allows the system to inject high-level semantic priors (e.g., texture, appearance, and contextual details) without retraining the entire 3D pipeline.

By conditioning on text prompts, the model is able to enhance missing regions and refine visual quality in a controllable manner. This approach effectively bridges 3D reconstruction with 2D generative priors, improving perceptual realism while maintaining structural consistency.

4. Limitations and Future Work

Despite the improvements introduced by our approach, several limitations remain.

First, the performance of our pipeline is inherently dependent on the quality of the initial 3D reconstruction. When the base 3D model (e.g., NeRF or 3DGS) fails to reconstruct geometry or misses large regions, our method is unable to fully recover the missing structural information.

Prompt: *<make a smiling face>*

Figure 4: Text-guided outputs using pretrained 2D diffusion models. The prompts influence the appearance and refinement of reconstructed regions while preserving overall structure.

The diffusion-based refinement primarily enhances existing content rather than generating entirely new geometry.

Second, our approach relies on a single-step diffusion model (SD-Turbo) to ensure fast inference. While this significantly improves efficiency, it can lead to slight blurring and loss of very fine details compared to multi-step diffusion methods.

Third, the current pipeline requires manually generated masks for inpainting, which limits scalability and automation. Additionally, while text-guided enhancement provides semantic control, strong or ambiguous prompts may introduce inconsistencies with the underlying 3D structure.

Future Work. Several directions can further improve this work. One important extension is the development of automated mask generation techniques to eliminate manual intervention. Another promising direction is the integration of stronger diffusion priors or fully 3D-aware diffusion models to handle cases where the initial reconstruction fails completely.

Furthermore, extending the framework to video diffusion models could improve temporal and multi-view consistency across views. Improving fine-detail reconstruction and reducing blur in high-frequency regions is another key area of future work. Finally, optimizing the pipeline for real-time performance would make the system more practical for real-world applications.

5. Conclusion

In this work, we presented an extension to the DIFIX3D+ framework by incorporating mask-guided latent inpainting and text-guided generation. Our approach enables localized correction of artifacts while preserving clean regions, and introduces semantic control through text prompts without modifying the underlying 3D backbone.

Through experiments on NeRF-Synthetic and Nersemble datasets, we demonstrate improved reconstruction quality, better handling of missing regions, and enhanced perceptual realism compared to baseline methods. The combination of 3D structural refinement and 2D diffusion-based semantic enhancement provides a flexible and efficient solution for improving novel view synthesis.

Overall, this work highlights the effectiveness of combining 3D reconstruction techniques with diffusion-based generative models, opening up new possibilities for controllable and high-quality 3D content generation.

References

Ho, J. & Salimans, T. (2022) Classifier-Free Diffusion Guidance. *arXiv preprint*. Available from: https://arxiv.org/abs/2207.12598

Kerbl, B., Kopanas, G., Leimkühler, T. & Drettakis, G. (2023) 3D Gaussian Splatting for Real-Time Radiance Field Rendering. *ACM Transactions on Graphics (SIGGRAPH)*. 42 (4). Available from: https://arxiv.org/abs/2308.04079

Mildenhall, B. et al. (2020a) NeRF Synthetic Dataset. https://www.matthewtancik.com/nerf. Scenes: lego, truck, train, playroom, drjohnson.

Mildenhall, B., Srinivasan, P. P., Tancik, M., Barron, J. T., Ramamoorthi, R. & Ng, R. (2020b) NeRF: Representing Scenes as Neural Radiance Fields for View Synthesis. *European Conference on Computer Vision (ECCV)*. Available from: https://arxiv.org/abs/2003.08934

Rombach, R., Blattmann, A., Lorenz, D., Esser, P. & Ommer, B. (2022) High-Resolution Image Synthesis with Latent Diffusion Models. *CVPR*. Available from: https://arxiv.org/abs/2112.10752

Sauer, A., Lorenz, D., Blattmann, A. & Rombach, R. (2023) Adversarial Diffusion Distillation. *arXiv preprint*. Available from: https://arxiv.org/abs/2311.17042

Wu, T., Zhang, K., et al. (2024) DIFIX3D+: Improving 3D Reconstructions with Single-Step Diffusion Models. *arXiv preprint*. Available from: https://arxiv.org/abs/2403.01774

Zheng, Y. et al. (2023) FastAvatar: Real-time and Photorealistic Avatar Reconstruction. *CVPR*. Available from: https://arxiv.org/abs/2305.01805

Zielonka, W. et al. (2023) Nersemble: Multi-view Human Reconstruction Dataset. *arXiv preprint*. Available from: https://arxiv.org/abs/2305.11070