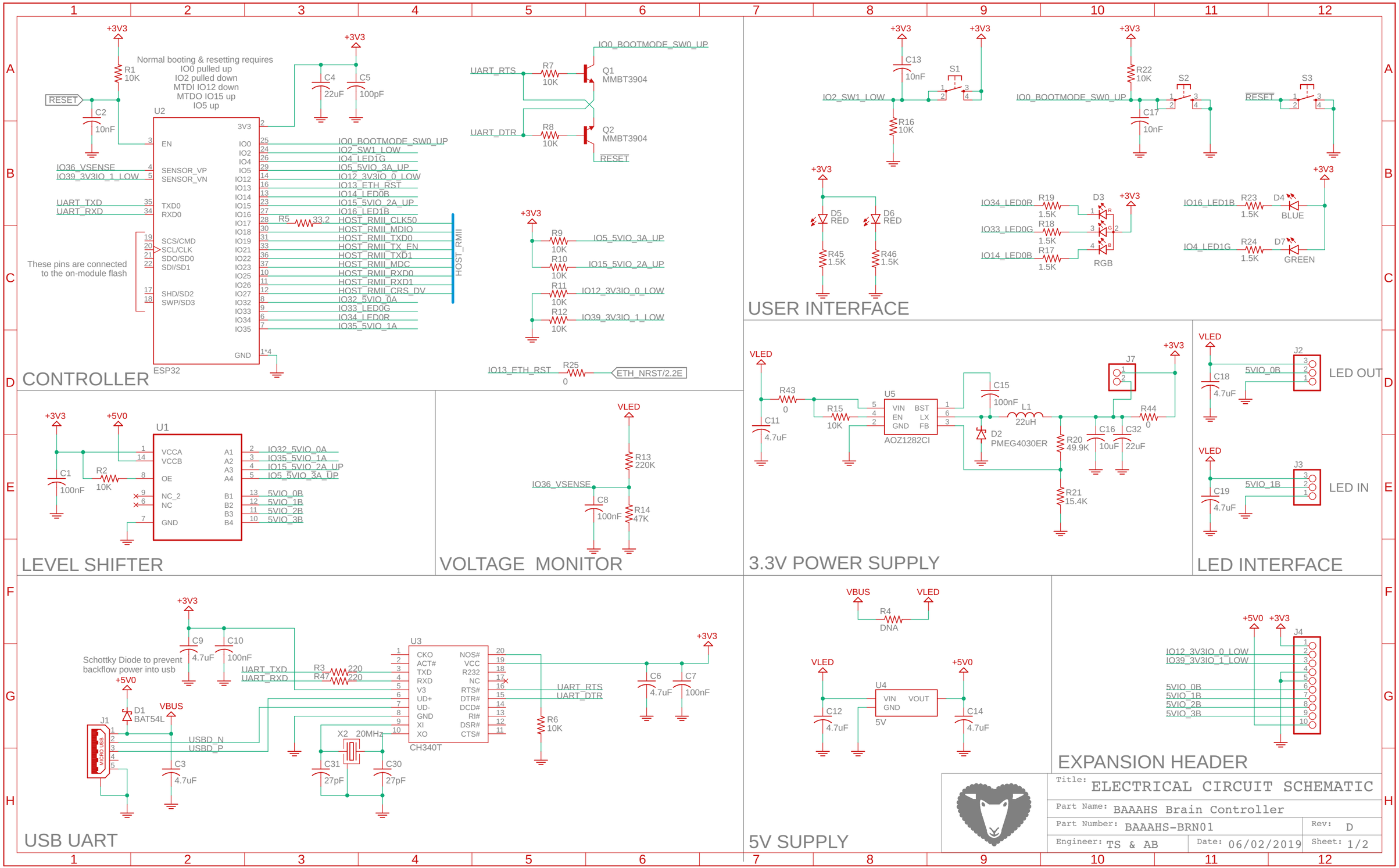
CONTROLLER
Normal booting & resetting requires
IO0 pulled up
IO2 pulled down
MTDI IO12 down
MTDO IO15 up
IO5 up
These pins are connected to the on-module flash
ESP32
HOST_RMII
USER INTERFACE
LEVEL SHIFTER
VOLTAGE MONITOR
3.3V POWER SUPPLY
LED OUT
LED IN
LED INTERFACE
USB UART
Schottky Diode to prevent backflow power into usb
CH340T
5V SUPPLY
EXPANSION HEADER
Title: ELECTRICAL CIRCUIT SCHEMATIC
Part Name: BAAAHS Brain Controller
Part Number: BAAAHS-BRN01
Rev: D
Engineer: TS & AB
Date: 06/02/2019
Sheet: 1/2

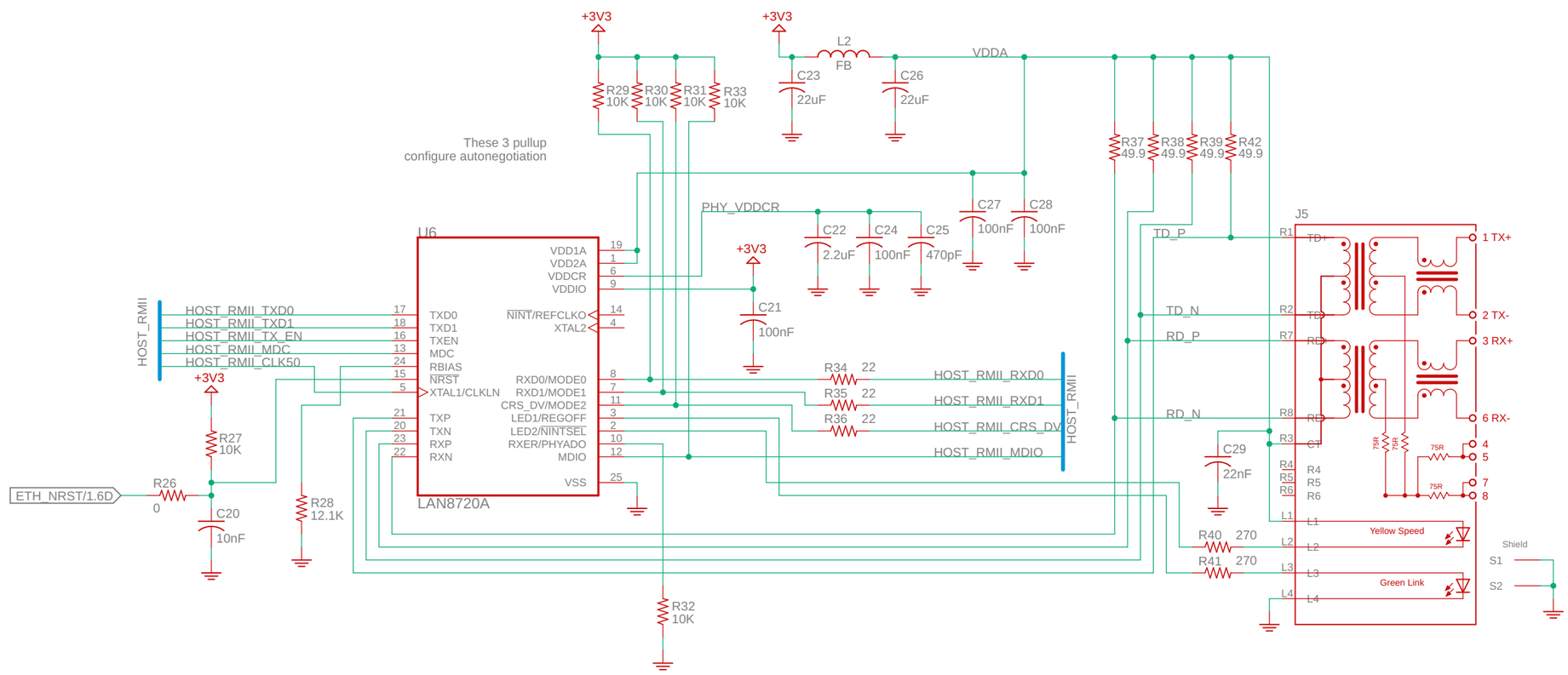

ETHERNET PYH AND JACK

Title:	ELECTRICAL CIRCUIT SCHEMATIC
Part Name:	BAAAHS Brain Controller
Part Number:	BAAAHS-BRN01
Rev:	D
Engineer:	TS & AB
Date:	06/02/2019
Sheet:	2/2