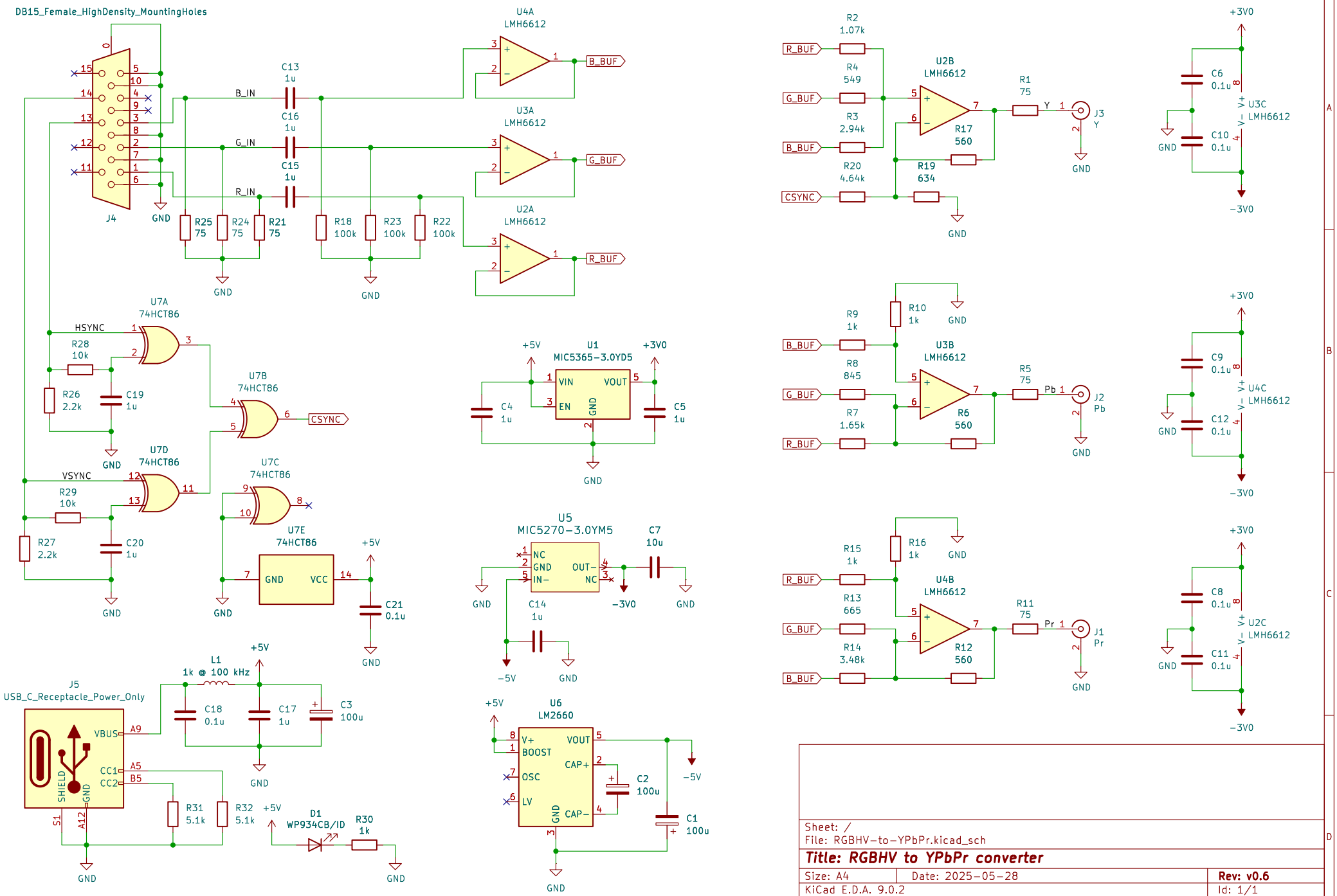

Sheet: /
File: RGBHV-to-YPbPr.kicad_sch

Title: RGBHV to YPbPr converter

Size: A4	Date: 2025-05-28	Rev: v0.6
KiCad E.D.A. 9.0.2		Id: 1/1