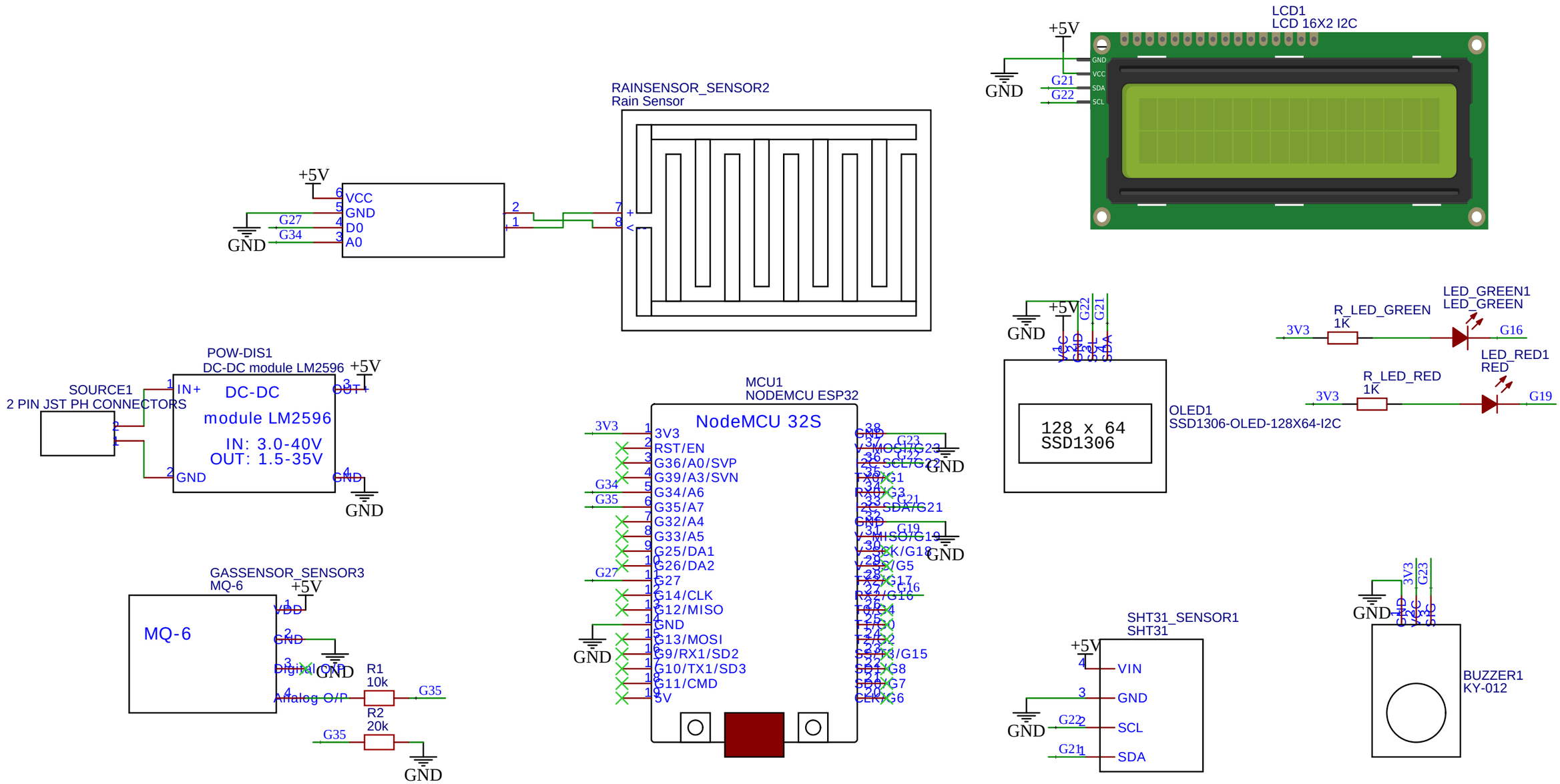

TITLE: Environmental Sensor	REV: 1.0
EasyEDA — Company: UIT - VNUHCM	Sheet: 1/1
Date: 2026-04-05 Drawn By: vietdung7706	

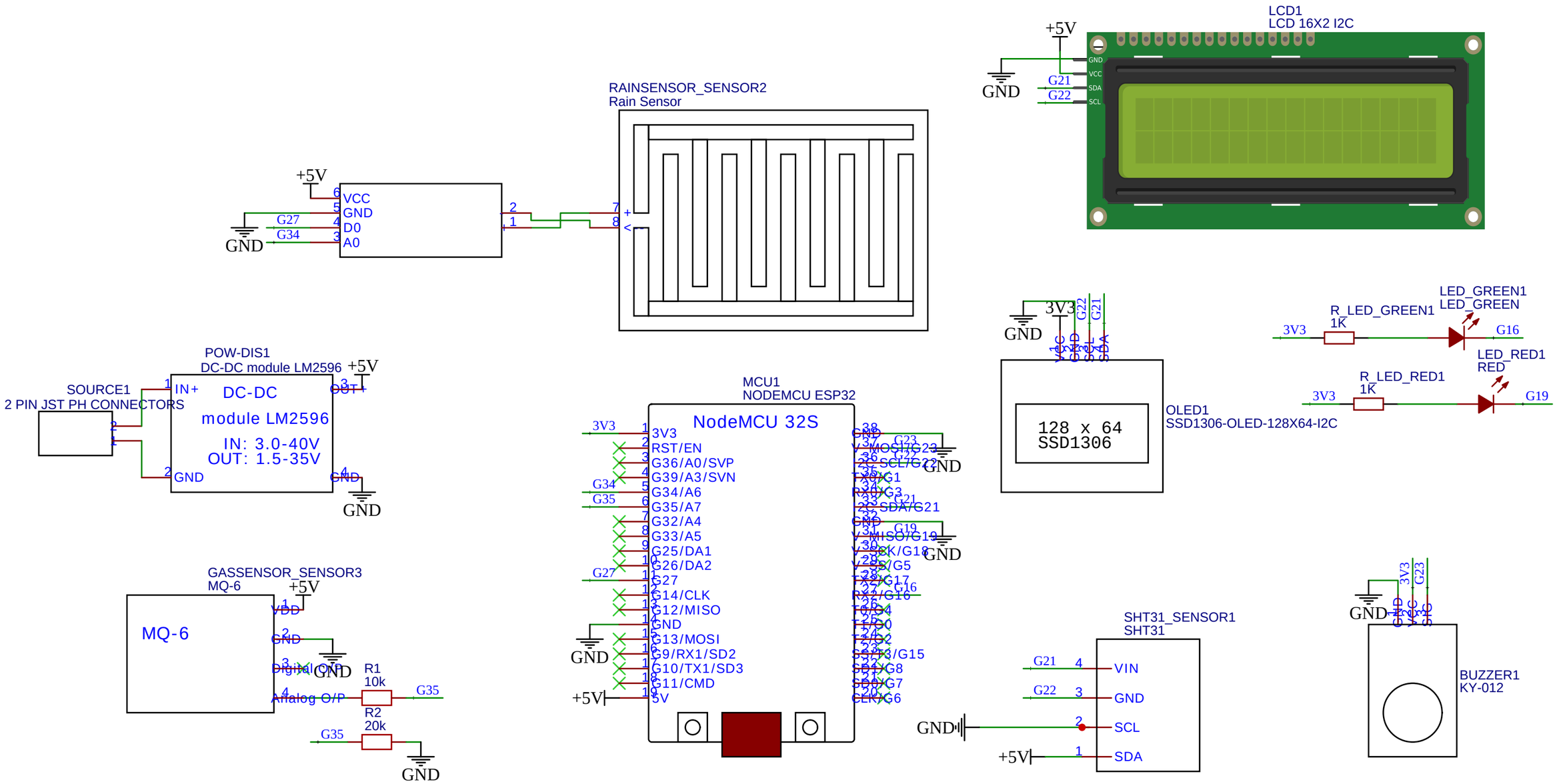

TITLE: Environmental Sensor	REV: 1.2
EasyEDA	Company: UIT - VNUHCM
	Sheet: 1/1
	Date: 2026-05-01 Drawn By: vietdung7706