OPERATING INSTRUCTIONS

S3000

Safety laser scanner

en

SICK
Sensor Intelligence.

This document is protected by the law of copyright, whereby all rights established therein remain with the company SICK AG. Reproduction of this document or parts of this document is only permissible within the limits of the legal determination of Copyright Law. Alteration or abridgement of the document is not permitted without the explicit written approval of the company SICK AG.

© SICK AG • Industrial Safety Systems • Germany • All rights reserved

Contents

1 About this document ... 8
1.1 Function of this document ... 8
1.2 Target group ... 8
1.3 Scope ... 8
1.4 Depth of information ... 9
1.5 Abbreviations used ... 9
1.6 Symbols used ... 10

2 On safety ... 11
2.1 Qualified safety personnel ... 11
2.2 Applications of the device ... 11
2.3 Correct use ... 12
2.4 General safety notes and protective measures ... 12
2.5 Environmental protection ... 14
2.5.1 Disposal ... 14
2.5.2 Separation of materials ... 14
2.6 Applicable directives and standards ... 15

3 Product description ... 16
3.1 Special features ... 16
3.2 Function ... 17
3.2.1 Principle of operation ... 17
3.2.2 Field set comprising of protective field and warning field(s) ... 18
3.2.3 Monitoring cases ... 20
3.3 S3000 variants ... 21
3.3.1 Device components ... 21
3.3.2 Functions of the I/O modules ... 23
3.3.3 Applications ... 24
3.4 Status indicators ... 27
3.4.1 LEDs and 7-segment display ... 27
3.5 Interoperability ... 28
3.5.1 Examples for EFI systems ... 29
3.5.2 Interoperability of the variants ... 31
3.5.3 Specific features with EFI systems ... 32
3.5.4 Interoperability with sens:Control devices ... 32

4 Configurable functions ... 33
4.1 Compatibility mode ... 33
4.2 System parameters ... 36
4.2.1 Application name ... 36
4.2.2 Name of the scanner ... 36
4.2.3 User data ... 36
4.2.4 Display direction of the 7-segment display ... 36
4.3 Application ... 37
4.3.1 Resolution ... 38
4.3.2 Basic response time ... 38
4.3.3 Angular resolution and maximum protective field range ... 39
4.3.4 Field mode ... 39
4.3.5 Exchange of field results via EFI ... 40

© SICK AG • Industrial Safety Systems • Germany • All rights reserved

4.4 Incremental encoder ... 40
4.4.1 Pulses per cm travel that are output by the incremental encoders ... 40
4.4.2 Tolerances allowed on the dynamic inputs ... 42
4.5 Inputs ... 43
4.5.1 Input delay ... 44
4.5.2 Sampling for the static control inputs ... 44
4.6 OSSDs ... 46
4.6.1 External device monitoring (EDM) ... 47
4.7 Restart ... 48
4.8 Universal I/O connections ... 50
4.8.1 Application diagnostic output in the compatibility mode ... 51
4.9 Field sets ... 51
4.9.1 Configuring the protective field and warning field ... 52
4.9.2 Protective field or warning field suggested by the safety laser scanner ... 54
4.9.3 Using the contour as a reference ... 55
4.10 Monitoring cases ... 57
4.10.1 Monitoring case switching via static input information ... 58
4.10.2 Monitoring case switching via velocity information ... 60
4.10.3 Velocity routing via EFI ... 61
4.10.4 Multiple sampling ... 62
4.10.5 Simultaneous monitoring ... 63
4.10.6 Checking of the monitoring case switching ... 64
4.10.7 Park/stand-by mode ... 64
4.11 Measured data output ... 65

5 Mounting ... 66
5.1 Stationary application in horizontal operation ... 67
5.1.1 Protective field size ... 68
5.2 Stationary vertical operation for access protection ... 72
5.2.1 Minimum distance ... 73
5.3 Stationary vertical operation for hazardous point protection ... 74
5.3.1 Minimum distance ... 75
5.4 Mobile applications ... 77
5.4.1 Protective field length ... 77
5.4.2 Protective field width ... 81
5.4.3 Height of the scan plane ... 81
5.4.4 Methods of preventing unprotected areas ... 82
5.5 Measures to protect areas not covered by the S3000 ... 84
5.6 Time for monitoring case switching ... 86
5.7 Mounting steps ... 88
5.7.1 Direct mounting ... 89
5.7.2 Mounting with mounting kit 1 ... 89
5.7.3 Mounting with mounting kit 2 ... 90
5.7.4 Mounting with mounting kit 3 ... 91
5.7.5 Mounting with the Heavy Duty mounting bracket ... 92
5.7.6 Adhesive label Important information ... 92
5.7.7 Using multiple S3000 safety laser scanners ... 92

© SICK AG • Industrial Safety Systems • Germany • All rights reserved

Contents

6 Electrical installation ... 94
6.1 System connection ... 96
6.1.1 Pin assignments of the I/O modules ... 97
6.2 System plug assembly ... 99
6.3 Pre-assembled system plugs ... 101
6.3.1 Pre-assembled system plugs with flying leads ... 101
6.4 Configuration connection M8 × 4 (serial interface) ... 103

7 Application examples and connection diagrams ... 104
7.1 Stationary applications ... 104
7.1.1 Applications with one monitored area (S3000 Standard) ... 104
7.1.2 Applications with multiple monitored areas (S3000 Advanced) ... 105
7.2 Mobile applications ... 106
7.2.1 Vehicle monitoring for unidirectional travel (S3000 Standard) ... 106
7.2.2 Velocity-dependent vehicle monitoring for unidirectional travel (S3000 Professional) ... 107
7.2.3 Vehicle monitoring with determination of the surrounding contour and reflector detection (S3000 Expert) ... 107
7.2.4 Velocity-dependent vehicle monitoring for bi-directional travel (S3000 Professional with S3000 Remote) ... 108
7.3 Applications with the Flexi Soft safety controller ... 109
7.3.1 Vehicle monitoring with four safety laser scanners and dynamic protective field switching using the Flexi Soft safety controller ... 109
7.4 Applications with sens:Control ... 110
7.4.1 More complex system expansions ... 110
7.4.2 Bus interfaces ... 110
7.5 Connection diagrams ... 111
7.5.1 Restart interlock and external device monitoring ... 112
7.5.2 Restart interlock and external device monitoring with UE10 series ... 112
7.5.3 Protective field switching with two static inputs ... 113
7.5.4 Protective field switching with four static inputs ... 113
7.5.5 Protective field switching with static and dynamic inputs ... 114
7.5.6 Protective field switching between two safety laser scanners with static inputs ... 114
7.5.7 Protective field switching between two S3000 with static and dynamic inputs ... 115
7.5.8 Protective field switching between an S3000 and an S300 with static and dynamic inputs ... 116
7.5.9 Protective field switching with a Flexi Soft safety controller ... 117

8 Configuration ... 118
8.1 Default delivery status ... 118
8.2 Preparation of the configuration ... 119

© SICK AG • Industrial Safety Systems • Germany • All rights reserved

9 Commissioning ... 120
9.1 Initial commissioning ... 120
9.1.1 Power-up sequence ... 121
9.2 Test notes ... 121
9.2.1 Pre-commissioning tests ... 122
9.2.2 Regular inspection of the protective device by qualified safety personnel ... 122
9.2.3 Daily testing of the protective device by a specialist or authorized personnel ... 123
9.3 Re-commissioning ... 124

10 Maintenance and care ... 126
10.1 Cleaning the front screen ... 126
10.2 Replacing the front screen ... 126
10.3 Replacing the I/O module ... 129
10.3.1 Steps for replacing the I/O module ... 131

11 Diagnostics ... 132
11.1 In the event of faults or errors ... 132
11.2 SICK support ... 132
11.3 Error and status indications on the LEDs ... 133
11.4 Error and status indications on the 7-segment display ... 135
11.5 Extended diagnostics ... 141

12 Technical specifications ... 142
12.1 Characteristics ... 142
12.1.1 Scanning range ... 142
12.1.2 Reset pulse ... 143
12.2 OSSD response times ... 144
12.3 Timing behavior of the OSSDs ... 145
12.4 Data sheet ... 147
12.5 EFI status information and control commands ... 156
12.6 Dimensional drawings ... 159
12.6.1 S3000 ... 159
12.6.2 Mounting kits ... 160
12.6.3 Scan plane origin ... 161

13 Ordering information ... 162
13.1 Items supplied ... 162
13.2 Available systems ... 162
13.3 Accessories/spare parts ... 163
13.3.1 Sensor heads ... 163
13.3.2 I/O modules ... 163
13.3.3 Mounting kits ... 163
13.3.4 System plug ... 164
13.3.5 Service cables ... 165
13.3.6 Self assembly connecting cables ... 165
13.3.7 Documentation ... 165
13.3.8 Safety relays/compact safety controller ... 166
13.3.9 Safety controllers ... 166
13.3.10 Network solutions ... 166
13.3.11 Miscellaneous ... 166

© SICK AG • Industrial Safety Systems • Germany • All rights reserved

Contents

14 Annex 167
14.1 Compliance with EU directives 167
14.2 Checklist for the manufacturer 168
14.3 Glossary 169
14.4 List of tables 171
14.5 List of illustrations 173

© SICK AG • Industrial Safety Systems • Germany • All rights reserved

1 About this document

Please read this chapter carefully before working with this documentation and the S3000.

1.1 Function of this document

These operating instructions are designed to address *the technical personnel of the machine manufacturer or the machine operator* in regards to correct mounting, electrical installation, commissioning, operation and maintenance of the S3000 safety laser scanner.

These operating instructions do *not* provide instructions for operating the machine, the system or the vehicle on which the safety laser scanner is, or will be, integrated. Information on this is to be found in the appropriate operating instructions for the machine, the system or the vehicle.

1.2 Target group

These operating instructions are addressed to *planning engineers, machine designers and the operators* of machines and systems which are to be protected by one or several S3000 safety laser scanners. They also address people who integrate the S3000 into a machine, a system or a vehicle, initialize its use, or who are in charge of servicing and maintaining the device.

1.3 Scope

These operating instructions are original operating instructions.

Note These operating instructions are only applicable to the S3000 safety laser scanner with one of the following entries on the type label in the field *Operating Instructions*:

- 8009791 AE V430
- 8009791 AE W285
- 8009791 AE WK81
- 8009791 AE YY95

This document is part of SICK part number 8009791 (operating instructions “S3000 Safety Laser Scanner” in all available languages).

For the configuration and diagnostics of these devices you require a CDS (Configuration & Diagnostic Software) version ≥ 3.6.7. To determine the version of your software version, select the **Module Info...** option in the **Help menu.**

© SICK AG • Industrial Safety Systems • Germany • All rights reserved

1.4 Depth of information

These operating instructions contain information on the S3000 safety laser scanner:

- mounting
- electrical installation
- commissioning and configuration
- care and maintenance
- fault diagnosis and troubleshooting
- part numbers
- accessories
- conformity and approval

Planning and using protective devices such as the S3000 also require specific technical skills which are not detailed in this documentation.

General information on accident prevention using opto-electronic protective devices can be found in the competence brochure “Guidelines Safe Machinery”.

When operating the S3000, the national, local and statutory rules and regulations must be observed.

Note We also refer you to the SICK AG homepage on the Internet at www.sick.com.

Here you will find information on:

- application examples
- a list of frequently asked questions regarding the S3000
- these operating instructions in different languages for viewing and printing

1.5 Abbreviations used

AGV Automated Guided Vehicle

ANSI American National Standards Institute

AWG American Wire Gauge = standardization and classification of wires and cables by type, diameter etc.

CDS SICK Configuration & Diagnostic Software = software for configuration and diagnostics on the S3000

CMS Contour Measurement & Safety = expanded measured data output as well as detection of reflectors as artificial landmarks

EDM External device monitoring

EFI Enhanced function interface = safe SICK device communication

ESD Electrostatic discharge

ESPE Electro-sensitive protective equipment

FPLC Fail-safe programmable logic controller

OSSD Output signal switching device = signal output of the protective device that is used to stop the dangerous movement

RIA Robotic Industries Association

© SICK AG • Industrial Safety Systems • Germany • All rights reserved

1.6 Symbols used

Recommendation Recommendations are designed to give you some assistance in your decision-making process with respect to a certain function or a technical measure.

Note Refer to notes for special features of the device.

Display indicators show the status of the 7-segment display on the S3000:

- Constant indication of characters, e.g. 8
- Flashing indication of characters, e.g. 8
- Alternating indication of characters, e.g. L and 2

●, ◐, ○ LED symbols describe the status of an LED:

- ● The LED is constantly illuminated.
- ◐ The LED is flashing.
- ○ The LED is off.

These symbols identify which LED is described:

- The “Error/Contamination” LED is flashing.
- The “OSSDs in the OFF state” LED is illuminated continuously.

➢ Take action ... Instructions for taking action are shown by an arrow. Read carefully and follow the instructions for action.

WARNING

Warning!

A warning indicates an actual or potential risk or health hazard. Observation and implementation of the warning will protect you from accidents.

Read carefully and follow the warning notices!

Software notes show the location in the CDS (Configuration & Diagnostic Software) where you can make the appropriate settings and adjustments. In the CDS open the menu **View**, **Dialog box** and select the item **File Cards** to go straight to the stated dialog fields. Alternatively, the software wizard will guide you through the appropriate setting.

The term “dangerous state”

The dangerous state (standard term) of the machine is always shown in the drawings and diagrams of this document as a movement of a machine part. In practical operation, there may be a number of different dangerous states:

- machine movements
- vehicle movements
- electrical conductors
- visible or invisible radiation
- a combination of several risks and hazards

© SICK AG • Industrial Safety Systems • Germany • All rights reserved

2 On safety

This chapter deals with your own safety and the safety of the system operators.

➢ Please read this chapter carefully before working with the S3000 or with the machine protected by the S3000.

2.1 Qualified safety personnel

The S3000 safety laser scanner must be installed, connected, commissioned and serviced only by qualified safety personnel. Qualified safety personnel are defined as persons who

- due to their specialist training and experience have adequate knowledge of the power-driven equipment to be checked

and

- have been instructed by the responsible machine owner in the operation of the machine and the current valid safety guidelines

and

- are sufficiently familiar with the applicable official health and work safety regulations, directives and generally recognized engineering practice (e.g. DIN standards, VDE stipulations, engineering regulations from other EU member states) that they can assess the work safety aspects of the power-driven equipment

and

- have access to these operating instructions and have read them.

As a rule these are qualified safety personnel from the ESPE manufacturer or also those persons who have been appropriately trained at the ESPE manufacturer, are primarily involved in checking ESPE and are allocated the task by the organization operating the ESPE.

2.2 Applications of the device

The S3000 safety laser scanner is used to protect persons and systems. It is intended to be used to monitor hazardous areas indoors.

The S3000 is not intended to be used outdoors.

The S3000 cannot provide protection from flying parts or from emitted radiation.

The S3000 is only intended for use in industrial environments. When used in residential areas it can cause radio interferences.

The device is a *type 3 ESPE* as defined by IEC 61496-1 and IEC 61496-3 and is therefore allowed for use with category 3 PL d controls as per EN ISO 13849-1 or SIL2 as per IEC 61508.

The S3000 is suitable for:

- hazardous area protection
- hazardous point protection
- access protection
- vehicle protection (electrically powered industrial trucks)

Note Depending on the application, other protective devices and measures may be required in addition to the safety laser scanner.

© SICK AG • Industrial Safety Systems • Germany • All rights reserved

2.3 Correct use

The S3000 safety laser scanner must be used only as defined in section 2.2 “Applications of the device” on page 11. It must be used only by qualified personnel and only on the machine where it has been installed and initialized by qualified safety personnel in accordance with these operating instructions. It is only permitted to be used on machines on which the dangerous state can be stopped immediately by the S3000 and/or it is possible to prevent the machine being placed in operation.

Note If the device is used for any other purposes or modified in any way — also during mounting and installation — any warranty claim against SICK AG shall become void.

2.4 General safety notes and protective measures

WARNING

Pay attention to the safety notes!

Please observe the following items in order to ensure the correct use of the S3000 safety laser scanner.

Repair only by authorized persons!

The improper repair of the protective device can result in the loss of the protective function. The protective device is only allowed to be repaired by the manufacturer or persons authorized by the manufacturer.

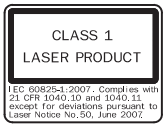

The S3000 safety laser scanner is of laser safety class 1. Additional measures for screening the laser radiation are not necessary (eye safe).

- This device meets the norms: IEC 60 825-1 as well as CDRH 21 CFR 1040.10 and 1040.11; excluded are deviations due to Laser Notice No. 50, dated 24.06.2007. In the standards CDRH 21 CFR 1040.10 and 1040.11 the following note is required: “Caution — use of controls, adjustments or performance of procedures other than those herein specified may result in hazardous radiation exposure!”
- During the mounting, installation and usage of the S3000, observe the standards and directives applicable in your country. You will find an overview of the most important regulations in section 2.6 “Applicable directives and standards” on page 15.
- The national/international rules and regulations apply to the installation, commissioning, use and periodic technical inspections of the S3000 safety laser scanner, in particular:
  - the Machinery Directive
  - Work Equipment Directive
  - the work safety regulations/safety rules
  - other relevant health and safety regulations

© SICK AG • Industrial Safety Systems • Germany • All rights reserved

- Manufacturers and operators of the machine on which the S3000 is used are responsible for obtaining and observing all applicable safety regulations and rules.
- The notes, in particular the test notes (see chapter 9 “Commissioning” on page 120) in these operating instructions (e.g. on use, mounting, installation or integration into the machine control) must be observed.
- Changes to the configuration of the devices can degrade the protective function. After every change to the configuration you must therefore check the effectiveness of the protective device. The person who makes the change is also responsible for the correct protective function of the device. When making configuration changes, please always use the password hierarchy provided by SICK to ensure that only authorized persons make changes to the configuration. The SICK service team is available to provide assistance if required.
- The tests must be carried out by qualified safety personnel or specially qualified and authorized personnel and must be recorded and documented to ensure that the tests can be reconstructed and retraced at any time.
- The operating instructions must be made available to the operator of the machine where the S3000 is used. The machine operator is to be instructed in the use of the device by qualified safety personnel and must be instructed to read the operating instructions.
- To meet the requirements of the relevant product standards (e.g. IEC 61496-1), the external voltage supply for the devices must be able to bridge a brief mains failure of 20 ms. Power supplies according to EN 602041-1 satisfy this requirement. Suitable power supplies are available as accessories from SICK (see section 13.3 “Accessories/spare parts” on page 163).

➢ Enclosed with these operating instructions is a checklist for checking by the manufacturer and OEM (see section 14.2 “Checklist for the manufacturer” on page 168). Use this checklist when checking the system that is protected with the S3000.

© SICK AG • Industrial Safety Systems • Germany • All rights reserved

2.5 Environmental protection

The S3000 safety laser scanner is constructed in such a way that it adversely affects the environment as little as possible and uses only a minimum of power and natural resources.

➢At work, always act in an environmentally responsible manner.

2.5.1 Disposal

Unusable or irreparable devices should always be disposed as per the applicable national regulations on waste disposal (e.g. European waste code 16 02 14).

Notes

- We would be pleased to be of assistance to you on the disposal of these devices. Contact your local SICK representative.
- Information on the individual materials in the S3000 is given in chapter 12 “Technical specifications” on page 147.

2.5.2 Separation of materials

WARNING

Only qualified safety personnel are allowed to separate materials!

Caution is required when dismantling devices. There is a risk of injuries.

Before you send the devices for appropriate recycling, it is necessary to separate the different materials in the S3000.

➢Separate the housing from the rest of the parts (in particular the circuit boards).

➢Send the separated parts for recycling as appropriate (see Tab. 1).

Tab. 1: Overview on disposal by components

Components	Disposal
Product	
Housing	Metal recycling (aluminium)
Motor bracket	Metal recycling (zinc die-cast housing)
Front screen	Plastic recycling
Circuit boards, cables, connectors and electrical connecting pieces	Electronic recycling
Packaging	
Cardboard, paper	Paper/cardboard recycling
Polyethylene packaging	Plastic recycling

© SICK AG • Industrial Safety Systems • Germany • All rights reserved

2.6 Applicable directives and standards

The most important directives and standards, valid for the use of opto-electronic protective devices in Europe, are listed below. Further regulations may be of importance to you, depending on the application. You can obtain further information of machine-specific standards from national institutions (e.g. DIN, BSI, AFNOR etc.), the authorities or your trade association.

If you operate the machine or vehicle in a country outside the European Union, please contact the manufacturer of the system and the local authorities and obtain information on the regulations and standards applicable there.

Application and installation of protective devices

Machinery Directive, e.g.:

- Safety of machinery — Basic concepts, general principles for design (EN ISO 12 100)
- Industrial automation systems — Safety of integrated manufacturing systems — Basic requirements (ISO 11 161)
- Safety of machinery — Electrical equipment of machines — Part 1: General requirements (EN 60 204-1)
- Safety of machinery — safety distances to prevent hazard zones being reached by the upper and lower limbs (EN ISO 13 857)
- Safety requirements for robots (EN ISO 10 218-1)
- Safety of industrial trucks. Driverless trucks and their systems (EN 1525)
- Safety of machinery — The positioning of protective equipment in respect of approach speeds of parts of the human body (EN ISO 13 855)
- Safety of machinery — Principles for risk assessment (EN ISO 14 121-1)
- Safety of machinery — Safety-related parts of control systems — Part 1: General principles for design (EN ISO 13849-1) as well as Part 2: Validation (EN ISO 13849-2)
- Safety of machines — electro-sensitive protective equipment — Part 1: General requirements (IEC 61 496-1) as well as Part 3: Special requirements for AOPDDR (IEC 61 496-3)
- Safety of machinery — Application of protective equipment to detect the presence of persons (IEC/TS 62 046)

Foreign standards, for example:

- Performance Criteria for Safeguarding (ANSI B11.19)
- Machine tools for manufacturing systems/cells (ANSI B11.20)
- Safety requirements for Industrial Robots and Robot Systems (ANSI/RIA R15.06)
- Safety Standard for guided industrial vehicles and automated functions of named industrial vehicles (ANSI B56.5)

Note To some extent these standards require the protective device to have the safety level **Control reliable**. The S3000 safety laser scanner meets this requirement.

Recommendation Please request our competence brochure “Guidelines Safe Machinery” on this subject.

© SICK AG • Industrial Safety Systems • Germany • All rights reserved

3 Product description

This chapter provides information on the special features and properties of the S3000 safety laser scanner. It describes the construction and the operating principle of the device, in particular the different operating modes.

3.1 Special features

- 190° scan area
- increased dust and particle tolerance due to dazzle and particle algorithms
- sensor heads with scanning ranges up to 4 m, 5.5 m or 7 m (maximum protective field radii)
- various I/O modules for different applications
- simple replacement of the I/O module (in this way the functionality can be easily enhanced)
- configuration using PC or notebook with SICK Configuration & Diagnostic Software
- configuration memory in the system plug. In case of device replacement, the existing configuration is automatically transferred to the S3000 newly connected. In this way downtimes can be significantly reduced.
- dual field mode with field sets consisting of protective field and warning field (optional simultaneous monitoring of two field sets[1])
- dual protective field mode with field sets consisting of two protective fields (optional simultaneous monitoring of two field sets = 4 protective fields)
- triple field mode with field sets consisting of one protective field and two warning fields
- contour monitoring of a protective field
- 3 universal I/O connections
- integrated external device monitoring (EDM)
- integrated restart interlock/restart interlock delay for which the parameters can be set
- safe bus interface via enhanced function interface (EFI) for operation in a system with other safety laser scanners, with products of the sens:Control product group or with a Flexi Soft safety controller
- compatibility mode for interoperability with safety laser scanners of an older generation

From S3000 Advanced

- up to 4 field sets
- protective field switching via static inputs or EFI

From S3000 Professional

- up to 8 field sets
- protective field switching via dynamic inputs using incremental encoders
- velocity routing using a Flexi Soft safety controller

Extended features from S3000 Expert and Remote[2]

- up to 32 field sets (in dual field mode or dual protective field mode)
- up to 21 field sets (in triple field mode)

Extended features from S3000 Expert

- CMS function for the detection of reflectors as artificial landmarks

[1] Option not available for variants with PROFINET interface.
[2] From sensor head with firmware ≥ B02.41 and from I/O module with serial number > 11240000.

© SICK AG • Industrial Safety Systems • Germany • All rights reserved

3.2 Function

The S3000 safety laser scanner operates correctly as a protective device only if the following conditions are met:

- The control of the machine, system or vehicle must be electrical.
- It must be possible to transfer the dangerous machine, system or vehicle state to a safe state using the OSSDs on the S3000 at any time, i.e. before a person has reached the hazardous point or hazardous area.

  Or:

  It must be possible to transfer the dangerous state of the machine, the system or the vehicle to a safe state at any time using the OSSDs on a safety controller connected to the S3000 or to a further safety laser scanner.
- The S3000 must be mounted and configured such that it detects objects as they enter the hazardous area (see chapter 5 “Mounting” on page 66 and chapter 9 “Commissioning” on page 120).
- The safety laser scanner’s optical path must always remain clear and is not allowed to be covered by transparent objects such as protective windows, Plexiglas, lenses etc. The safety laser scanner’s protective function can only be ensured if the contamination measurement function is not bypassed by such measures.

3.2.1 Principle of operation

The S3000 is an optical sensor that scans its surroundings in two dimensions using infrared laser beams. It is used to monitor hazardous areas on machines or vehicles.

Fig. 1: Principle of operation, time-of-flight measurement by the S3000

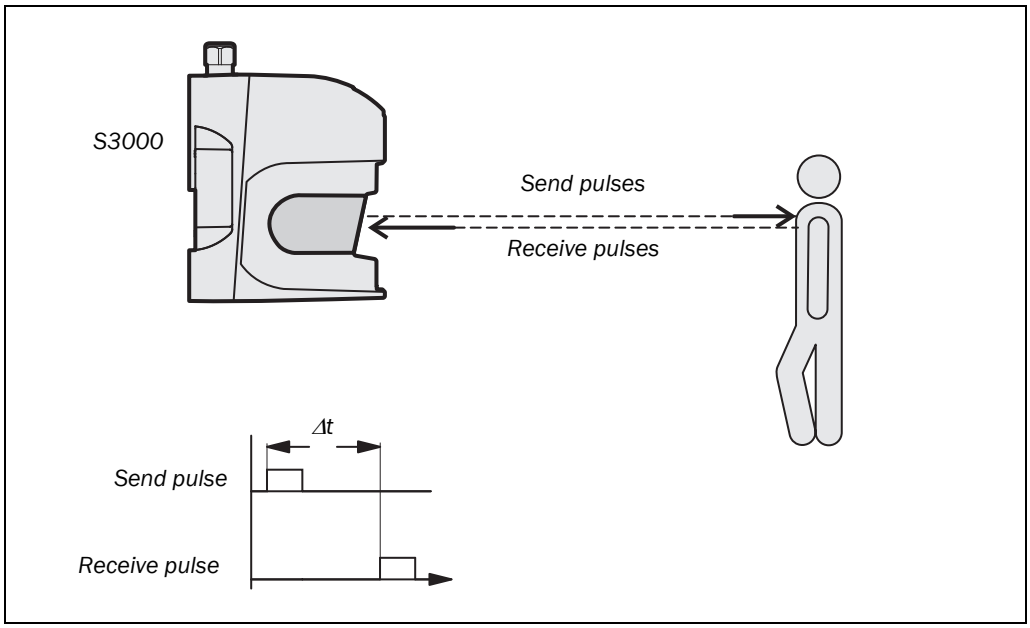

The S3000 works on the principle of time-of-flight measurement. It sends out very short pulses of light (send pulses). At the same time an “electronic stopwatch” is started. When the light hits an object, it is reflected and received by the safety laser scanner (receive pulses). From the time between sending and reception (Δt) the S3000 calculates its distance to the object.

© SICK AG • Industrial Safety Systems • Germany • All rights reserved

Fig. 2: Principle of operation, rotation of the S3000

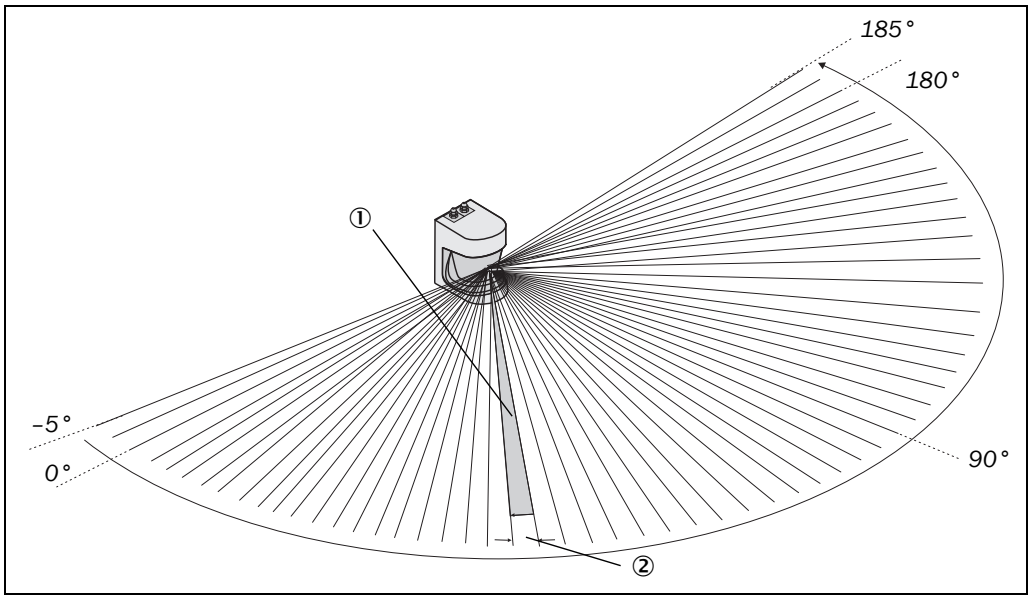

In the S3000 there is also a mirror rotating at constant speed that deflects the light pulses such that they cover an arc of 190°. In this way an object can be detected in the protective field within 190°. The first beam of a scan starts at –5° relative to the back of the scanner.

The S3000 sends its pulses of light with an angular resolution of 0.25° or 0.5° ①. As a result resolutions between 30 mm and 150 mm can be achieved ②.

Due to its active scanning principle, the S3000 does not require receivers or reflectors. This has the following advantages:

- Your installation effort is lower.
- You can easily adapt the monitored area to the hazardous area on a machine.
- In comparison with contact sensors, electro-sensitive scanning is nearly wear-free.

3.2.2 Field set comprising of protective field and warning field(s)

Protective fields and warning fields form the so-called field set. You can configure these field sets with the aid of the CDS. The fields can be configured as circular, rectangular or of arbitrary shape. If the area to be monitored changes, then you can re-configure the S3000 in software without additional mounting effort.

Depending on the I/O module used (see section “I/O modules” on page 22) you can define up to 32 different field sets and save these in the safety laser scanner. In this way you can switch to a different field set in case of a change in the monitoring situation (see section 3.2.3 “Monitoring cases” on page 20).

You can configure different field sets:

- field sets consisting of one protective field and one warning field
- field sets consisting of two protective fields
- field sets consisting of one protective field and two warning fields

The protective field secures the hazardous area on a machine or vehicle. As soon as the safety laser scanner detects an object in the protective field, the S3000 switches the OSSDs to the off status and thus initiates the shutdown of the machine or stop of the vehicle.

© SICK AG • Industrial Safety Systems • Germany • All rights reserved

If two protective fields are configured, then the two cut-off paths must be routed to independent OSSD pairs on the Flexi Soft safety controller.

Fig. 3: Triple field mode with one protective field and two warning fields

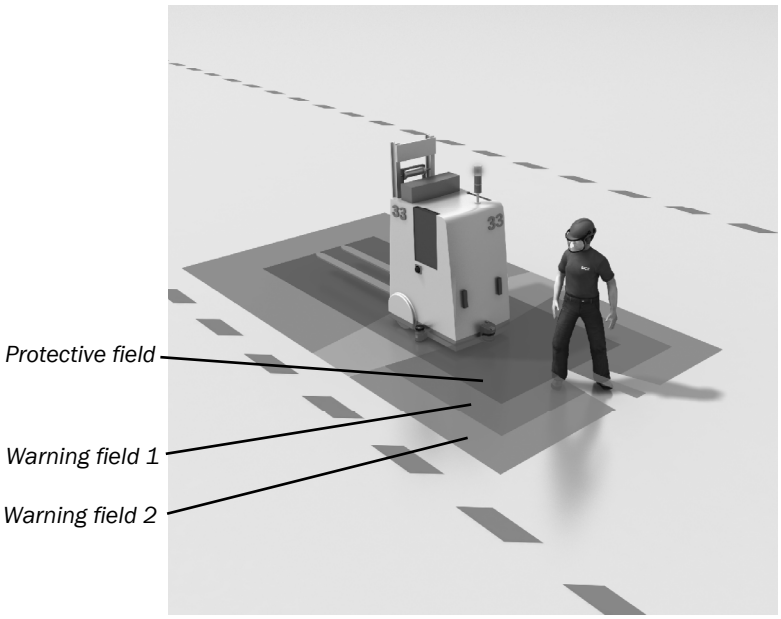

You can define the warning fields such that the safety laser scanner detects an object before the actual hazardous area.

Warning field 1 can be used in particular for vehicle protection to detect an object even before the actual hazardous area and to slowly retard the movement of the vehicle or bring it to a standstill. In this way the wear on the brakes on an AGV can be reduced. Warning field 2 can also be used to trigger a warning signal.

Note A **warning field** is **not** allowed to be used for tasks related to personnel protection.

Contour monitoring

In addition to the protective field, the S3000 can also monitor a contour (e.g. the floor in vertical applications).

© SICK AG • Industrial Safety Systems • Germany • All rights reserved

3.2.3 Monitoring cases

Depending on the I/O module used (see section “I/O modules” on page 22) up to 32 monitoring cases can be defined and selected during operation using local static or dynamic control inputs or via EFI. In this way process-dependent hazardous area protection or velocity-dependent vehicle monitoring is possible for example.

Fig. 4: Monitoring cases

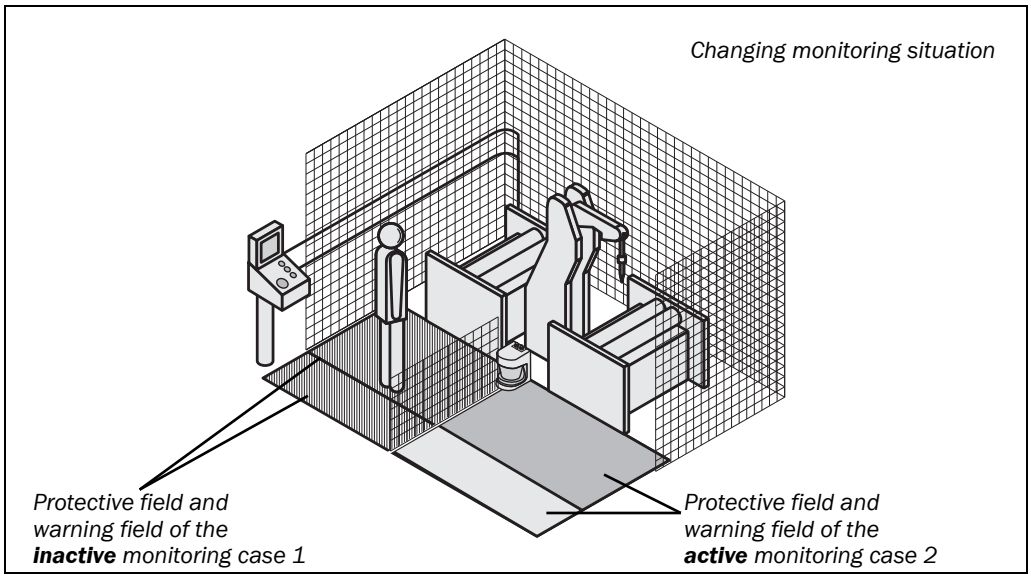

Simultaneous monitoring

Depending on the field mode selected, on the S3000 either simultaneous monitoring of two fields sets each with one protective field and one warning field (dual field mode) or with two protective fields (dual protective field mode) is possible, or a field set with one protective field and two warning fields (triple field mode) can be monitored.

Fig. 5: Monitoring possibilities with the S3000

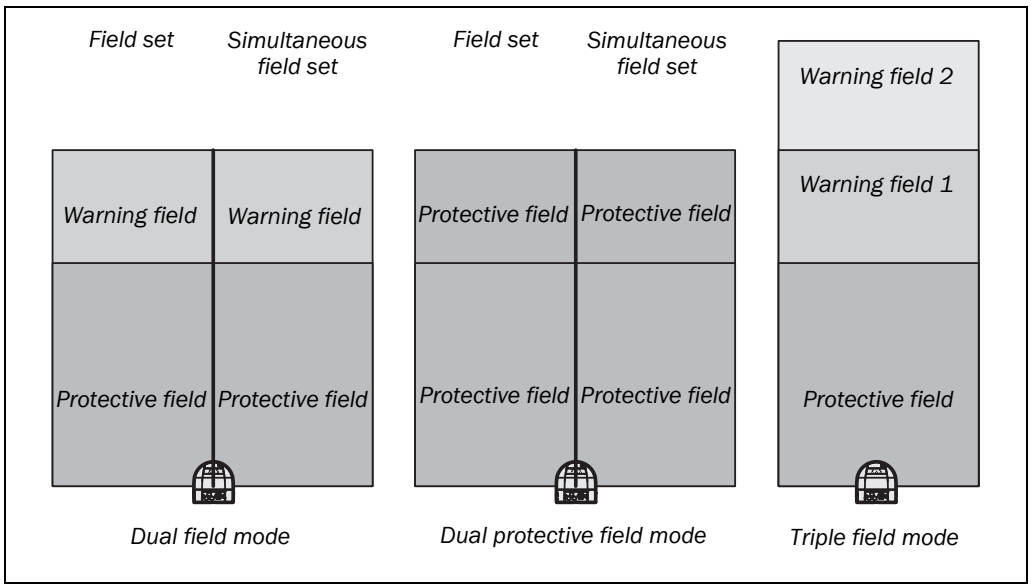

Using simultaneous monitoring, the S3000 can monitor two field sets simultaneously (e.g. hazardous area on the left and hazardous area on the right). In conjunction with a Flexi Soft safety controller, which provides several pairs of OSSD, e.g. two machines can be protected independently of each other using only one S3000.

© SICK AG • Industrial Safety Systems • Germany • All rights reserved

If two field sets with dual protective fields are configured simultaneously, four protective fields can be monitored simultaneously. In this way up to four independent hazardous areas can be monitored for safety purposes in conjunction with a Flexi Soft safety controller.

Fig. 6: Simultaneous monitoring

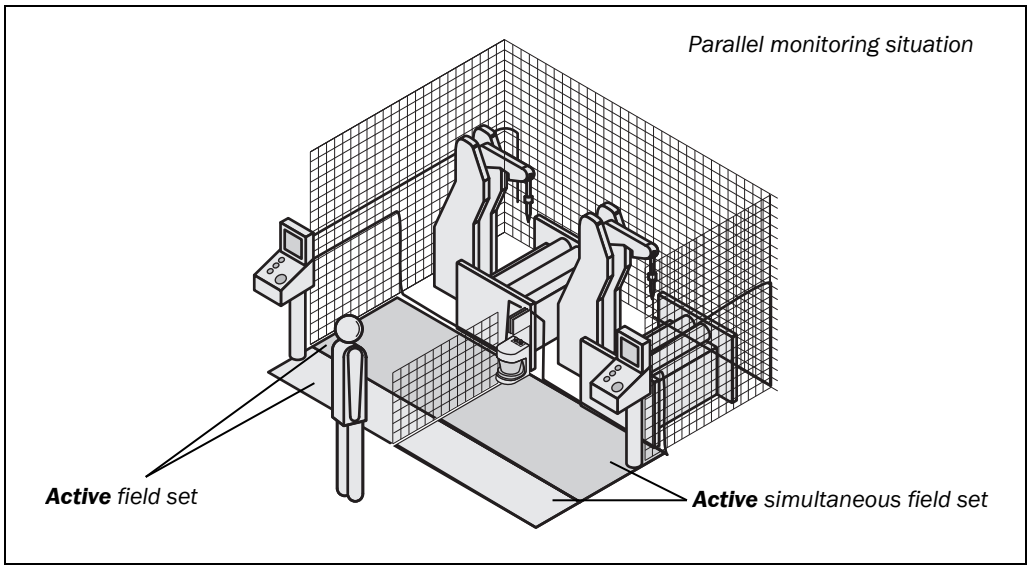

3.3 S3000 variants

The S3000 variants are formed by three sensor heads and five I/O modules.

3.3.1 Device components

The S3000 safety laser scanner comprises three components:

- the sensor head with the opto-electronic acquisition system
- the I/O module which defines the functionality of the S3000
- the system plug with the configuration memory (the system plug contains all electrical connections with the exception of the configuration interface)

Fig. 7: Sensor head, I/O module and system plug

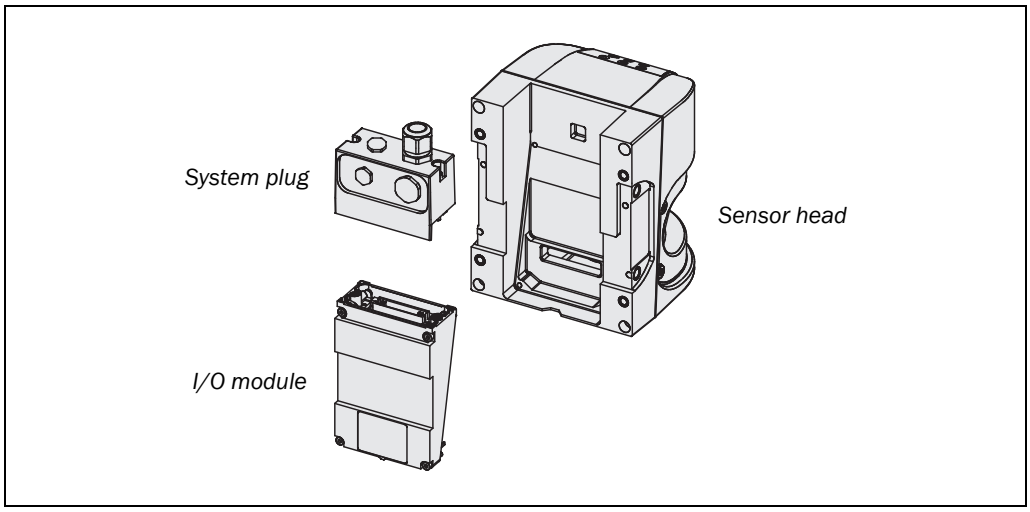

© SICK AG • Industrial Safety Systems • Germany • All rights reserved

Sensor heads

The sensor heads differ in the maximum scanning range and the resulting size of the protective field.

Fig. 8: Protective field ranges of the sensor heads

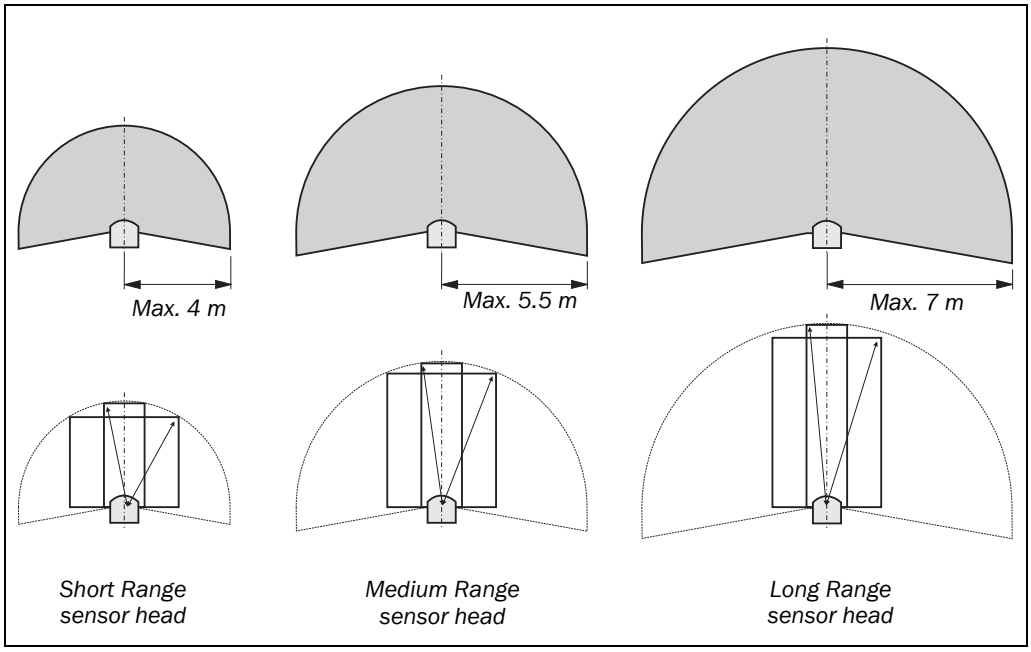

Note The protective field ranges are the maximum achievable radial distances from the safety laser scanner. They are achieved in applications with a resolution of 70 mm and coarser. If rectangular protective fields are configured, then the maximum protective field range is reached in the corners of the protective field.

I/O modules

Five I/O modules are available for the S3000. With the aid of these I/O modules, the S3000 covers the various applications.

Fig. 9: Available I/O modules

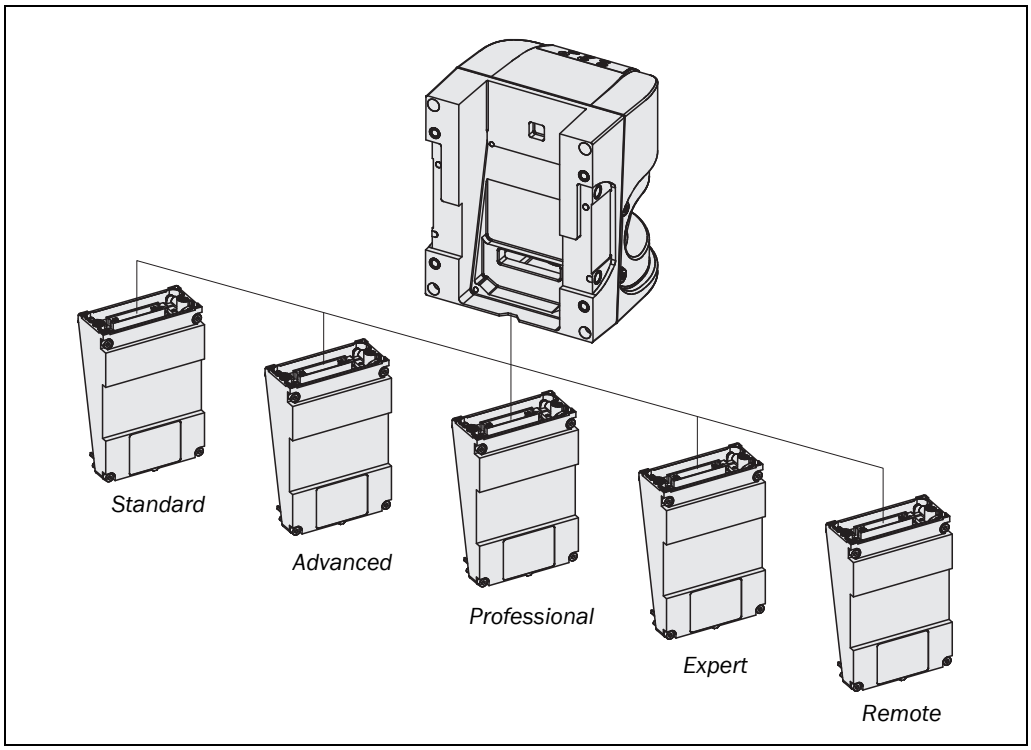

© SICK AG • Industrial Safety Systems • Germany • All rights reserved

3.3.2 Functions of the I/O modules

Tab. 2: Functions of the I/O modules

Functions	Standard	Advanced	Professional	Expert	Remote[3]
Object resolution [mm]	30/40/50/70/150				
Pairs of output signal switching devices (OSSDs)	1	1	1	1	1
External device monitoring (EDM)	■	■	■	■	■
Universal I/Os	3	3	3	3	3
Restart interlock/delay	■	■	■	■	■
Field sets consisting of protective field and warning field (dual field mode) or of two protective fields (dual protective field mode)	2[4]	4	8	32	32[5]
Can be used for the simultaneous monitoring of two areas. The areas can each be monitored with one protective field and one warning field (dual field mode) or with two protective fields (dual protective field mode).[6] In this way it is possible to monitor up to four protective fields[7].	■	■	■	■	■
Field sets consisting of one protective field and two warning fields (triple field mode) with an angular resolution of 0.5°	1	4	8	21	21[8]
Field sets consisting of one protective field and two warning fields (triple field mode) with an angular resolution of 0.25°	1	4	8	10	10
Programmable monitoring cases in standalone mode	1	4	32	32	–
Programmable monitoring cases in an EFI system	32	32	32	32	32
Static control inputs for monitoring case switching	–	2	2	2	–
Static/dynamic control inputs for monitoring case switching	–	–	2	2	–
EFI interface (safe SICK device communication)	■	■	■	■	■
Output of the measured data (surrounding contour)	■	■	■	■	■
Extended CMS functions (reflector detection, filter function for the measured values)	–	–	–	■	–

3) Valid for I/O modules with serial number > 11240000.
4) The second field set on the S3000 Standard can only be used as a simultaneous field set.
5) Maximum possible number of field sets — the actual number is the same as for the S3000 variant to which an S3000 Remote is connected.
6) Function is available from firmware B02.43.
7) If two or four protective fields are monitored, then the cut-off paths must be routed to independent OSSD pairs with the aid of a Flexi Soft safety controller.
8) Only in combination with S3000 Expert or in standalone operation with Flexi Soft safety controller.

© SICK AG • Industrial Safety Systems • Germany • All rights reserved

3.3.3 Applications

Tab. 3: Possible applications for the S3000 variants

S3000 Standard: Protection of a robot insertion station	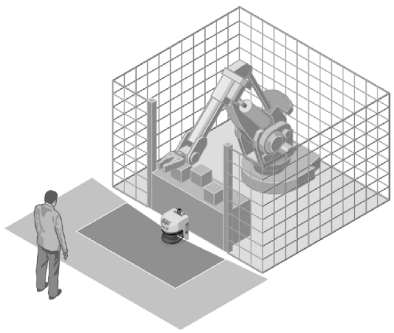
S3000 Standard: Access protection on a robot cell	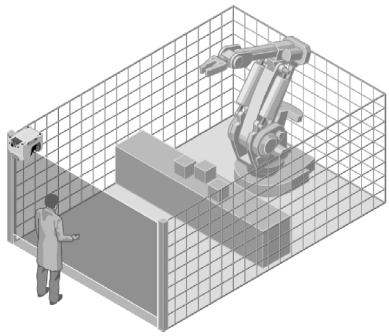
S3000 Advanced: Hazardous area protection on a complex material processing system	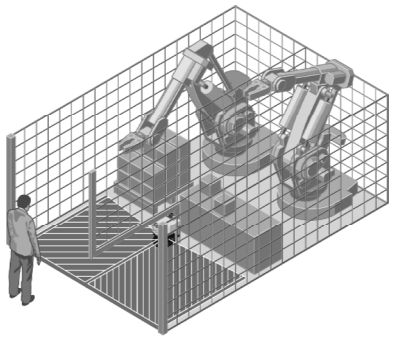
S3000 Professional and Remote: Velocity-dependent protection of an automated guided vehicle (AGV) with bi-directional travel	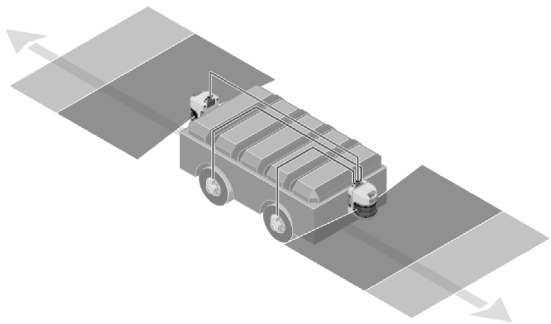

© SICK AG • Industrial Safety Systems • Germany • All rights reserved

S3000 Professional: Protection of an automated guided vehicle (AGV) with protective fields for driving around bends	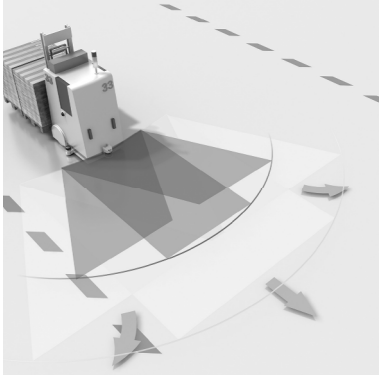
S3000 Expert: Protection of an automated guided vehicle (AGV) with protective fields for different vehicle velocities	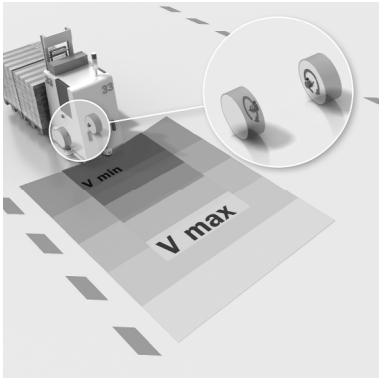
S3000 Professional/Expert: Protection of an automated guided vehicle (AGV) in the triple field mode (with two warning fields) in the direction of travel and dual field mode in the opposite direction	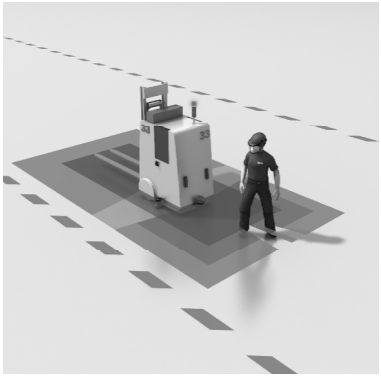
S3000 Standard/Advanced/ Professional/Expert, in combination with a Flexi Soft safety controller: Protection of a tire press using the dual protective field mode with simultaneous monitoring of four protective fields	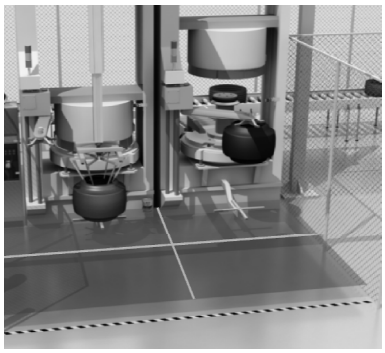

© SICK AG • Industrial Safety Systems • Germany • All rights reserved

S3000 Expert, S300 Advanced in combination with a Flexi Soft safety controller: Velocity-dependent protection of an automated guided vehicle (AGV). An S3000 Expert measures the velocity and provides the velocity information to the other safety laser scanners via EFI.	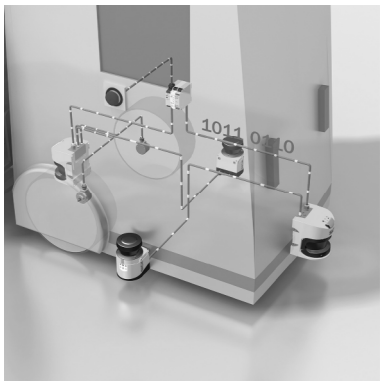
S3000 Expert: Protection of an automated guided vehicle (AGV) with output of processed measured data (as navigation aid, e.g. during docking maneuvers)	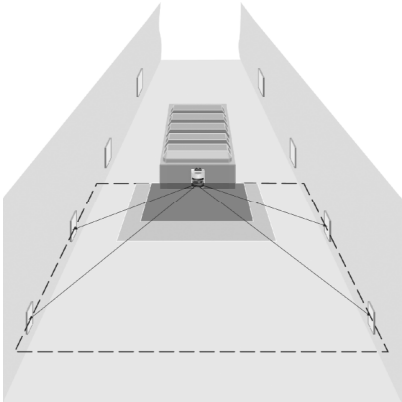

Notes

- Please note the additional functions of the S3000 I/O module Expert; with this module expanded applications are possible via the RS-422 interface for measured data. You will find further details on this topic in the documentation “Telegram Listing Standard” (part no. 9090807).
- Laser measuring systems (LMS) with specially adapted software are also available from SICK AG for measuring tasks.
- The CD-ROM “CDS & Manuals” contains additional documentation on the topics of measured data output, filter functions, reflector detection and telegram structure (PDF file in German and English).

© SICK AG • Industrial Safety Systems • Germany • All rights reserved

3.4 Status indicators

3.4.1 LEDs and 7-segment display

The LEDs and the 7-segment display indicate the operational status of the S3000. They are positioned on the front of the safety laser scanner. Above the LEDs there are symbols that are used in the remainder of these operating instructions to describe the LEDs.

Fig. 10: Status indicators on the S3000

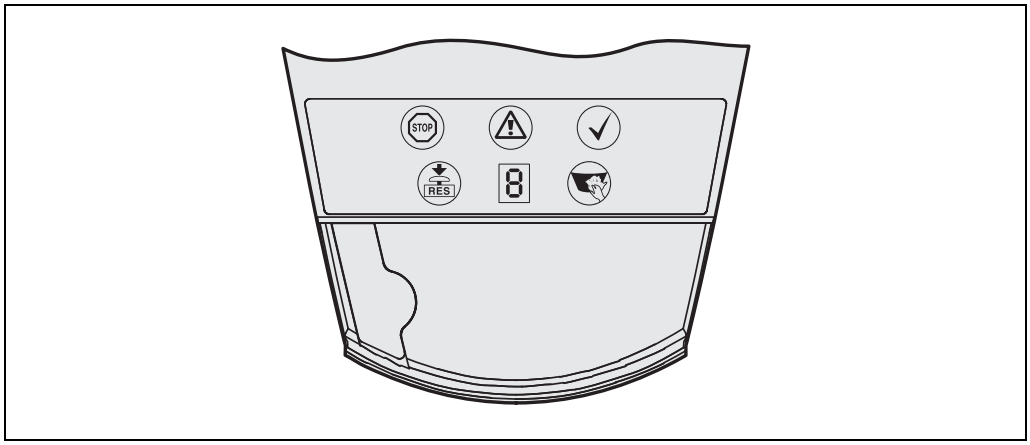

The symbols have the following meaning:

- OSSDs in the OFF state (e.g. on object in the protective field, reset required, lock-out)
- Warning field interrupted (object in the warning field or in one of the warning fields)
- OSSDs in the ON state (no object in protective field)
- Reset required
- Front screen contaminated
- 7-segment display for the indication of the status and errors

Note You will find detailed information in section 11.3 “Error and status indications on the LEDs” on page 133 and in section 11.4 “Error and status indications on the 7-segment display” on page 135.

© SICK AG • Industrial Safety Systems • Germany • All rights reserved

3.5 Interoperability

The S3000 safety laser scanner can be integrated in an EFI system. An EFI system can comprise two safety laser scanners, a sens:Control device with one to two safety laser scanners or a Flexi Soft safety controller with up to four safety laser scanners.

Fig. 11: S3000 Remote in combination with a Flexi Soft safety controller or another S3000

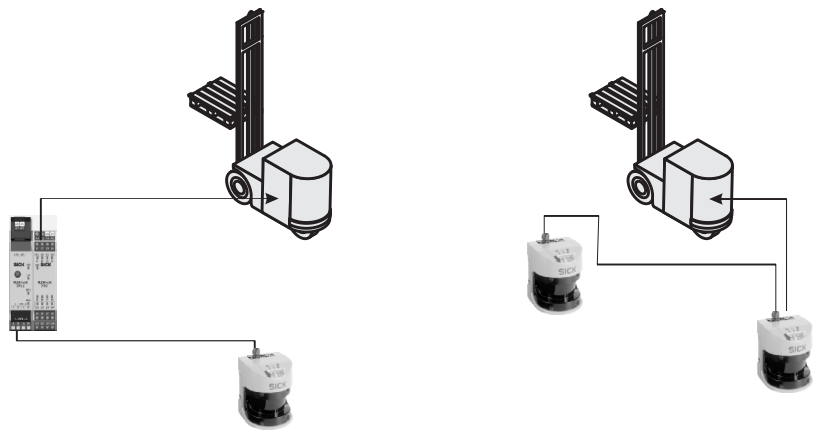

Addressing of the guest

If two safety laser scanners are operated on an EFI string, then one is the host, the other the guest. If only one safety laser scanner is operated on an EFI string, then this device is the host.

All devices involved can be unambiguously identified by the address and information can be distributed and retrieved using bit assignment (see also Technical Description “EFI — Enhanced Function Interface”, SICK part no. 8012621).

WARNING

In an EFI system with two safety laser scanners, set the address of one of the scanners to guest!

To be able to unambiguously differentiate between the devices in an EFI system, one S3000 must be configured as the guest. For this purpose a jumper is wired between the connection terminals 7 (ERR) and 10 (A1) (see section 6.1.1 “Pin assignments of the I/O modules” on page 97).

The jumper always defines the guest device. This jumper is never allowed to be fitted on the host device.

When the S3000 is switched on in an EFI system, the following message appears briefly on the 7-segment display:

- H on the S3000 host
- G on the S3000 guest

© SICK AG • Industrial Safety Systems • Germany • All rights reserved

3.5.1 Examples for EFI systems

Fig. 12: EFI systems comprising two safety laser scanners

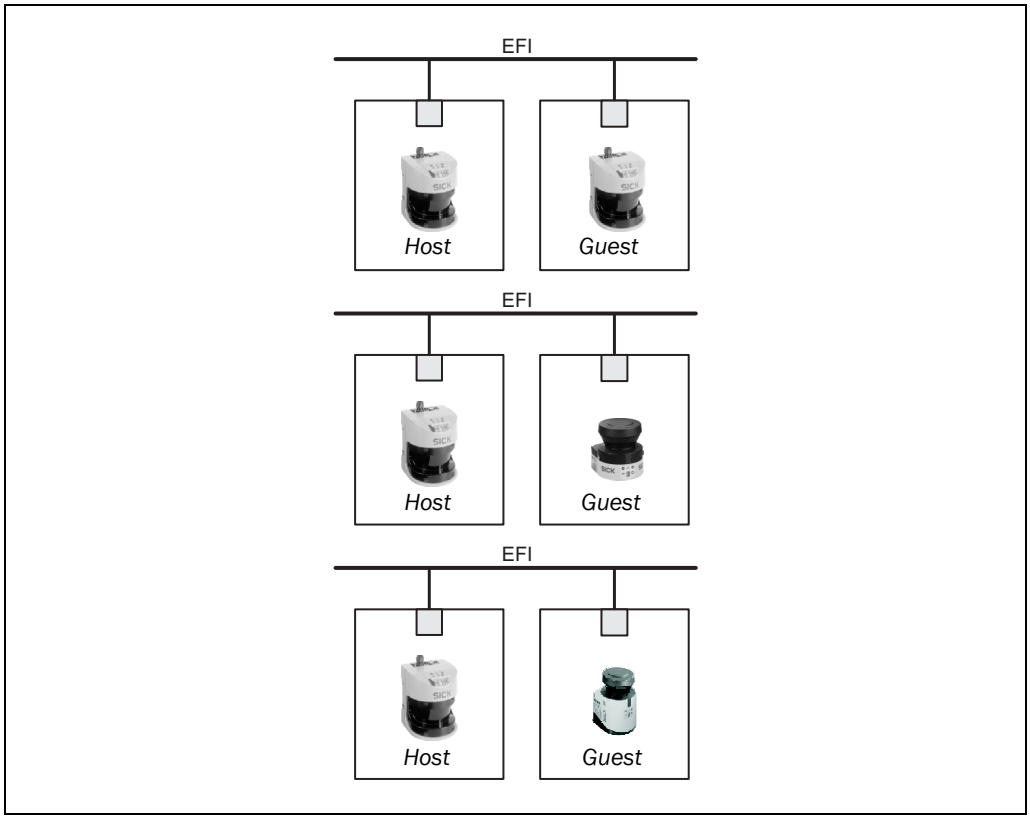

Fig. 13: EFI system with sens:Control device

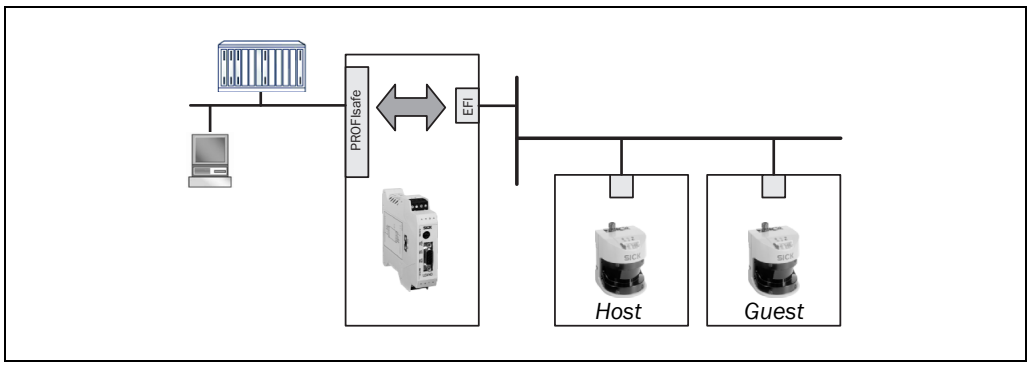

© SICK AG • Industrial Safety Systems • Germany • All rights reserved

Fig. 14: EFI system with Flexi Soft safety controller

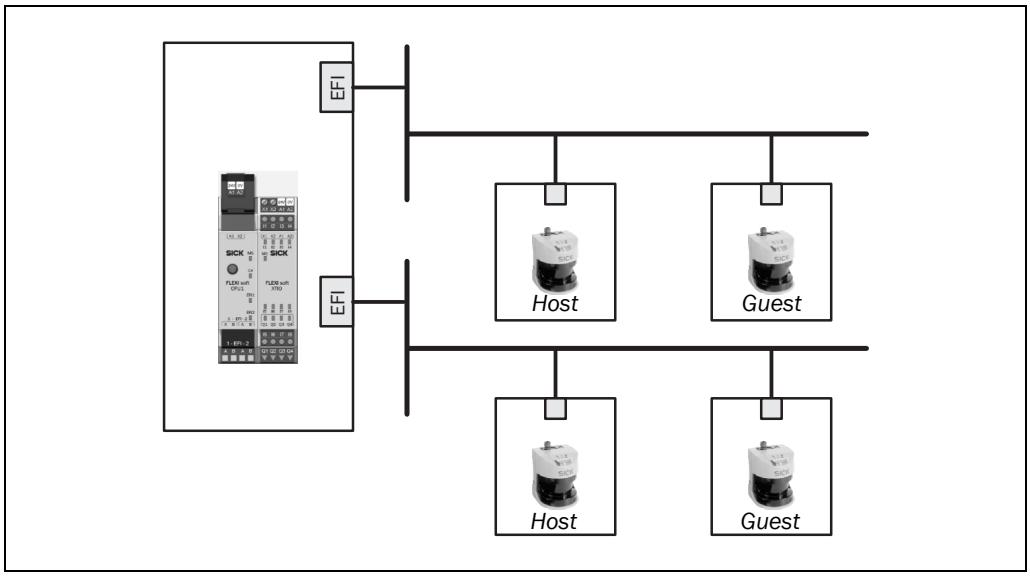

The Flexi Soft safety controller provides two EFI strings; up to two safety laser scanners (S3000, S300, S300 Mini, also mixed) can be connected to each of these strings. It is therefore possible to realize applications with up to four safety laser scanners (see also section 7.3.1).

Using the Flexi Soft safety controller it is possible to monitor two protective fields and two warning fields simultaneously with one S3000 in dual field mode. In the dual protective field mode it is possible to monitor up to four protective fields simultaneously. In an application it is therefore possible to monitor up to eight protective fields and up to eight warning fields or up to 16 protective fields simultaneously.

To connect two safety laser scanners to one of the EFI strings on a Flexi Soft safety controller, wire them radially, as shown in Fig. 15.

Fig. 15: EFI network topologies

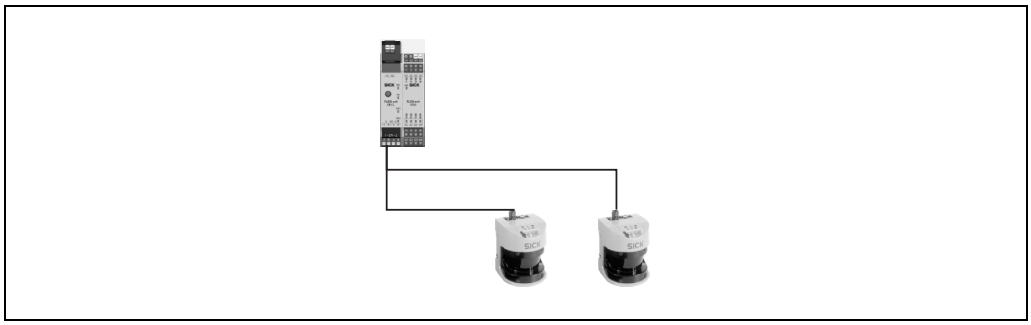

You will find details on the connection of safety laser scanners in section 7.5.9 “Protective field switching with a Flexi Soft safety controller” on page 117.

© SICK AG • Industrial Safety Systems • Germany • All rights reserved

3.5.2 Interoperability of the variants

Due to the further development of the safety laser scanner, additional functions, e.g. triple field technology, have been implemented in the device. As a result the latest devices are not 100 % compatible with safety laser scanners already in use in the field.

To ensure compatibility, the S3000 safety laser scanners with firmware ≥ B02.41 and serial number > 12210000 can be operated in compatibility mode. The following tables show which devices can form an EFI system.

Interoperability with safety laser scanners

	S3000 Standard	S3000 Advanced	S3000 Professional	S3000 Remote	S3000 Expert	S300 Standard	S300 Advanced	S300 Professional	S300 Expert	S300 Mini Standard[10]	S300 Mini Remote
S3000 Standard	■	■	■	■	■	■	■	■	■	X	■
S3000 Advanced	■	■	■	■	■	■	■	■	■	X	■
S3000 Professional	■	■	■	■	■	■	■	■	■	X	■
S3000 Remote	■	■	■	■[9]	■	■	■	■	■	X	■[9]
S3000 Expert	■	■	■	■	■	■	■	■	■	X	■

Tab. 4: Interoperability with safety laser scanners
■ = *EFI system possible*
X = *EFI system not possible*

Interoperability with safety laser scanners in compatibility mode (see section 4.1 on page 33)

	S3000 Standard	S3000 Advanced	S3000 Professional	S3000 Professional CMS	S3000 Remote	S3000 Expert	S300 Standard[10]	S300 Advanced	S300 Professional	S300 Professional CMS	S300 Expert	S300 Expert CMS	S300 Mini Standard[10]	S300 Mini Remote
S3000 Standard	■	■	■	■	■	■	X	■	■	■	■	■	X	X
S3000 Advanced	■	■	■	■	■	■	X	■	■	■	■	■	X	X
S3000 Professional	■	■	■	■	■	■	X	■	■	■	■	■	X	X
S3000 Remote	■	■	■	■	■[9]	■	X	■	■	■	■	■	X	X
S3000 Expert	■	■	■	■	■	■	X	■	■	■	■	■	X	X

Tab. 5: Interoperability with safety laser scanners in compatibility mode
■ = *EFI system possible*
X = *EFI system not possible*

[9] Only in combination with Flexi Soft safety controller or sens:Control device.
[10] Device does not have an EFI interface, for this reason an EFI system is not possible.

© SICK AG • Industrial Safety Systems • Germany • All rights reserved

3.5.3 Specific features with EFI systems

Input signals

In an EFI system, the input signals for monitoring case switching are applied to the inputs on the host or to a safety controller. The guest is connected to the host via EFI and receives from the host the input information for monitoring case switching.

Monitoring case switching

In an EFI system, the host defines the number of possible monitoring cases. If an S3000 is configured as a guest with a higher level device (S3000 host, sens:Control device), more monitoring cases may therefore be available depending on the system configuration.

Example The S3000 Advanced is used on an S3000 Professional as a guest. Eight monitoring cases are configured for the S3000 Professional. On the S3000 Advanced there are also eight monitoring cases available in this situation.

Internal or external OSSDs

In an EFI system you define which output signal switching device (OSSD) is switched when there is an object in the protective field (see section 4.6 on page 46).

Restart interlock/delay

The effectiveness of a restart interlock/delay configured in the S3000 is dependent on the integration of the EFI status information from the S3000 in the logic of the Flexi Soft safety controller (see section 4.7 on page 48).

3.5.4 Interoperability with sens:Control devices

The S3000 safety laser scanner can be connected to the following sens:Control devices and in this way integrated into the related bus systems.

- PROFIsafe gateway UE4140-22I0000
- PROFIBUS gateway UE1140-22I0000
- Ethernet gateway UE1840-22H0000
- CANopen gateway UE1940-22I0000
- PROFINET IO gateway UE4740-20H0000

© SICK AG • Industrial Safety Systems • Germany • All rights reserved

4 Configurable functions

4.1 Compatibility mode

To ensure compatibility, the S3000 safety laser scanners with firmware ≥ B02.41 can be operated in compatibility mode.

Activate the compatibility mode in the device selection wizard in the CDS.

Fig. 16: Compatibility mode

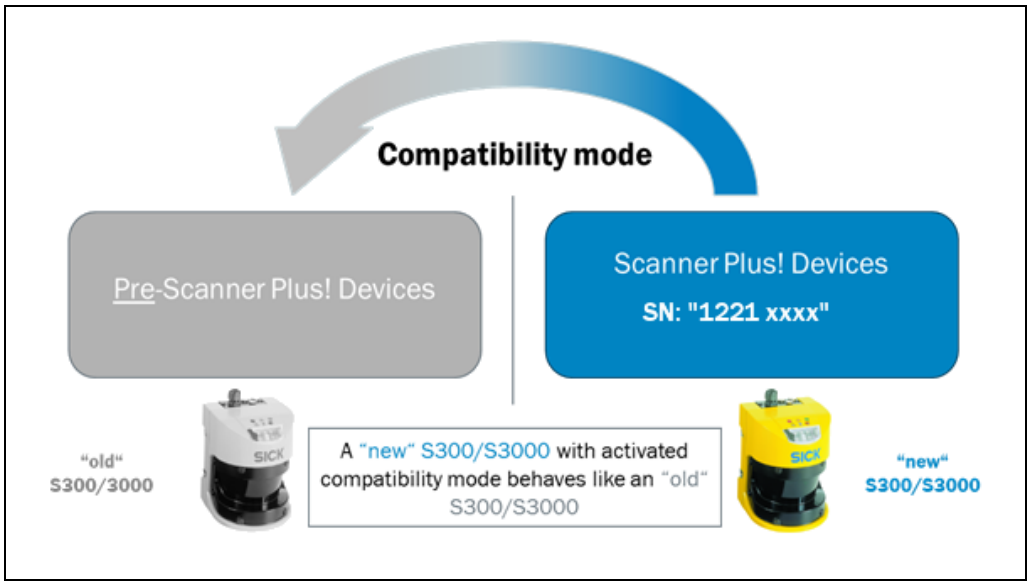

Reasons why you must activate the compatibility mode or the compatibility mode is activated automatically by the CDS:

- You are using one of the following devices in an EFI system:
  - S3000 Professional CMS
  - S3000 with firmware < B02.41 and serial number < 12210000
  - S3000 Standard, Advanced, Professional with an I/O module with serial number < 12210000
  - S3000 Remote with I/O module with serial number < 11240000
  - S300 Professional CMS
  - S300 Expert CMS
  - S300 with firmware < 02.10 and serial number < 12210000
  - S300 with system plug serial number < 12210000
- You configure an S3000 with firmware < B02.41 and serial number < 12210000.
- You configure an S3000 Standard, Advanced, Professional with I/O module with serial number < 12210000.
- You configure an S3000 Remote with I/O module with serial number < 11240000.
- You use an S3000 with a system plug in which a configuration is saved, ...
  - that only supports the compatibility mode.
  - that has been configured in the compatibility mode.
  - that has been configured with a CDS version < 3.6.7.
- You want to ensure newly configured devices can be replaced with old devices.
- You want to replace old devices with new.

© SICK AG • Industrial Safety Systems • Germany • All rights reserved

The table below shows the differences between the functions of the S3000 variants in the compatibility mode.

Tab. 6: Functions of the I/O modules in compatibility mode

Functions	Standard	Advanced	Professional	Expert	Remote[11]
Application diagnostic output, warning field output and reset output instead of universal I/Os	■	■	■	■	■
Field sets consisting of one protective field and **one warning field** (dual field mode) or two protective fields (dual protective field mode)	2[12]	4	8	8	8[13]
Programmable monitoring cases in standalone mode	1	4	16	16	–
Programmable monitoring cases in an EFI system	1	4	16	16	16
Velocity routing using a Flexi Soft safety controller	–	–	–	–	–

Notes

- The user interface of the CDS in compatibility mode corresponds to the user interface of CDS version 3.6.6.
- The related operating instructions delivered with the device are to be used for older devices (see 1.3 “Scope” on page 8).

[11] Valid for I/O modules with serial number > 11240000.
[12] The second field set on the S3000 Standard can only be used as a simultaneous field set.
[13] Maximum possible number of field sets — the actual number is the same as for the S3000 variant to which an S3000 Remote is connected.

© SICK AG • Industrial Safety Systems • Germany • All rights reserved

Interoperability in an EFI system depending on the firmware version

	Firmware	S3000 Standard	S3000 Standard	S3000 Advanced	S3000 Advanced	S3000 Professional	S3000 Professional	S3000 Professional CMS	S3000 Expert	S3000 Remote	S3000 Remote
Firmware		≥B02.41	≤B02.35	≥B02.41	≤B02.35	≥B02.41	≤B02.35	≤B02.35[14]	≥B02.41	≥B02.41	≤B02.35
S3000 Standard	≥B02.41	X	■	X	■	X	■	■	X	X	■
S3000 Advanced	≥B02.41	X	■	X	■	X	■	■	X	X	■
S3000 Professional	≥B02.41	X	■	X	■	X	■	■	X	X	■
S3000 Expert	≥B02.41	X	■	X	■	X	■	■	X	X	■
S3000 Remote	≥B02.41	X	■	X	■	X	■	■	X	X	■

Tab. 7: Required compatibility mode with different firmware versions of the S3000 in an EFI system with other S3000
■ = *Compatibility mode required*
X = *Compatibility mode not required*[15]

	Firmware	S300 Standard	S300 Standard	S300 Advanced	S300 Advanced	S300 Professional	S300 Professional	S300 Professional CMS	S300 Expert	S300 Expert	S300 Expert CMS
Firmware		≥02.10	<02.10	≥02.10	<02.10	≥02.10	<02.10	<02.10[14]	≥02.10	<02.10	<02.10[14]
S3000 Standard	≥B02.41	X	–	X	■	X	■	■	X	■	■
S3000 Advanced	≥B02.41	X	–	X	■	X	■	■	X	■	■
S3000 Professional	≥B02.41	X	–	X	■	X	■	■	X	■	■
S3000 Expert	≥B02.41	X	–	X	■	X	■	■	X	■	■
S3000 Remote	≥B02.41	X	–	X	■	X	■	■	X	■	■

Tab. 8: Required compatibility mode with different firmware versions of the S3000 in an EFI system with other safety laser scanners
■ = *Compatibility mode required*
X = *Compatibility mode not required*[16]
– = *EFI system not possible*

Note The S300 Mini does not support the compatibility mode. For EFI systems with the S300 Mini safety laser scanner, a device must be used that is not operated in the compatibility mode.

[14] This variant supports exclusively the compatibility mode.
[15] Make sure that you have the latest S3000 I/O module (S3000 Standard, Advanced, Professional with I/O module with serial number > 12210000, S3000 Remote with I/O module with serial number > 11240000).
[16] Make sure that the serial number of the S300 system plug is > 12210000 and that the S3000 I/O module is current (S3000 Standard, Advanced, Professional with I/O module with serial number > 12210000, S3000 Remote with I/O module with serial number > 11240000).

© SICK AG • Industrial Safety Systems • Germany • All rights reserved

4.2 System parameters

A name can be assigned to the application configured as well as to the safety laser scanner(s). The names are saved in the devices after the configuration is transferred. The name chosen may be, for example, the identifier for the vehicle, system or the machine.

You enter the application name and the names of the safety laser scanners used in the CDS.

4.2.1 Application name

Enter a name for your application. You can enter a name with a maximum of 16 characters.

If you assign unique application names, you may “reserve” the devices for certain duties. A machine maintenance person comparing exchanged devices with the configuration data saved in the CDS will be notified that the application name does not match. He may then exchange these devices for those with the correct application name.

4.2.2 Name of the scanner

Enter a **device name** for each of the safety laser scanners in the system. You can enter names with a maximum of 8 characters.

Recommendation

Use meaningful names, e.g. “front” and “rear” for vehicle monitoring. Unique device names make the subsequent configuration steps easier (for example on allocating the control inputs or the OSSDs).

On a host/guest system with two safety laser scanners, the device names must always be different.

4.2.3 User data

You can enter your name in the field **Name of the user**. You can enter a name with a maximum of 22 characters. This is then added to the configuration protocol and in the diagnostics report.

4.2.4 Display direction of the 7-segment display

The depiction of numbers on the 7-segment display can be rotated by 180° with the aid of the CDS. This is useful, for example, when the S3000 must be rotated by 180° owing to the specific assembly.

If you rotate the numbers of the 7-segment display, the point in the 7-segment display goes out.

How to determine the display direction of the 7-segment display:

➢ Under **7-segment display**, activate the **Rotated by 180°** option. After the configuration draft has been transferred to the S3000, the numbers of the 7-segment display are rotated by 180°.

© SICK AG • Industrial Safety Systems • Germany • All rights reserved

4.3 Application

With the help of the CDS you can configure the S3000 for the required application. Depending on whether you select a stationary or a mobile application, different configuration options are available:

Tab. 9: Comparison of mobile and stationary applications

Mobile applications	Stationary applications
Resolution	
• 30 mm (hand detection with smaller protective field size) • 40 mm (hand detection with larger protective field size) • 50 mm (leg detection with smaller protective field size) • 70 mm (leg detection with larger protective field size)[17]	• 30 mm (hand detection with smaller protective field size) • 40 mm (hand detection with larger protective field size) • 50 mm (leg detection with smaller protective field size) • 70 mm (leg detection with larger protective field size) • 150 mm (body detection)
Manipulation prevention	
The safety laser scanner checks whether in any 90° segment all measured values correspond to the maximum distance value that can be measured.	
• If this is the case, the S3000 shuts down after **2 hours** and signals I↻I.	• If this the case, the S3000 shuts down after **5 seconds** and signals I↻I.

[17] In mobile applications a resolution of only 70 mm is required for leg detection, as a coarser resolution is adequate for the detection of a human leg due to the movement of the vehicle.

© SICK AG • Industrial Safety Systems • Germany • All rights reserved

4.3.1 Resolution

The maximum protective field range[18] depends on the configured resolution and the angular resolution. The following table shows the configurable values:

Tab. 10: Maximum protective field ranges

	Maximum protective field range	
Short Range sensor head	**At 0.5° angular resolution (60 ms basic response time)**	**At 0.25° angular resolution (120 ms basic response time)**
30 mm (hand detection)	1.90 m	2.80 m
40 mm (hand detection)	2.60 m	3.80 m
50 mm (leg detection)	3.30 m	4.00 m
70 mm (leg detection)	4.00 m	4.00 m
150 mm (body detection)[19]	4.00 m	4.00 m
Medium Range sensor head		
30 mm (hand detection)	1.90 m	2.80 m
40 mm (hand detection)	2.60 m	3.80 m
50 mm (leg detection)	3.30 m	4.80 m
70 mm (leg detection)	4.70 m	5.50 m
150 mm (body detection)[19]	5.50 m	5.50 m
Long Range sensor head		
30 mm (hand detection)	1.90 m	2.80 m
40 mm (hand detection)	2.60 m	3.80 m
50 mm (leg detection)	3.30 m	4.80 m
70 mm (leg detection)	4.70 m	7.00 m
150 mm (body detection)[19]	7.00 m	7.00 m

Note The warning field can be configured to up to 49 m for all variants and resolutions. The detection capability within the warning field is dependent on the remission of the objects to be detected (see section 12.1 “Characteristics” on page 142).

4.3.2 Basic response time

The basic response time is dependent on the selected angular resolution. It is:

- 60 ms basic response time at 0.5° angular resolution
- 120 ms basic response time at 0.25° angular resolution

Note You may need to add supplements to the basic response time due to multiple sampling and data transmission over EFI (see section 12.2 “OSSD response times” on page 144).

[18] Radial distance to the safety laser scanner.
[19] Cannot be configured for mobile applications.

© SICK AG • Industrial Safety Systems • Germany • All rights reserved

4.3.3 Angular resolution and maximum protective field range

You can configure two angular resolutions:

- At 0.5° angular resolution the basic response time is 60 ms.
- At 0.25° angular resolution the basic response time is 120 ms.

The angular resolution has an influence on the maximum protective field range and the basic response time (see section 4.3.1 “Resolution” on page 38 and section 4.3.2 “Basic response time” on page 38).

Notes

- The maximum protective field range of the S3000 must be sufficient to cover the calculated protective field size including the necessary supplements (see section 5.1.1 “Protective field size” on page 68).
- On the S3000 Expert and S3000 Remote the number of field sets that can be configured is dependent on the configured angular resolution (see section 4.9 on page 51).

4.3.4 Field mode

Dual

If you select the **Dual** option, you can configure field sets that comprise two fields, **one protective field** and **one warning field**.

If you select **Dual**, simultaneous monitoring (see section 4.10.5 “Simultaneous monitoring” on page 63) is available. In this way two protective fields and two warning fields can be evaluated.

Dual protective fields

If you select the **Dual protective fields** option, you can configure field sets that comprise **two protective fields**. Here both fields are evaluated as safe fields.

If you select **Dual protective fields**, simultaneous monitoring (see section 4.10.5 “Simultaneous monitoring” on page 63) is available. In this way four protective fields can be evaluated.

Note This function can only be used in conjunction with a Flexi Soft safety controller that is connected via EFI.

Triple

If you select the **Triple** option, you can configure field sets with three fields. These field sets comprise **one protective field** and **two warning fields**.

Note On the S3000 Expert and S3000 Remote the number of field sets that can be configured is dependent on the selected field mode (see section 4.9 on page 51).

© SICK AG • Industrial Safety Systems • Germany • All rights reserved

4.3.5 Exchange of field results via EFI

WARNING

Pay attention to the logical values for the protective field status information on transfer to the Flexi Soft safety controller!

The status of an evaluated protective field is logical 1 if the protective field is unoccupied. The status is logical 0 if the protective field is infringed (see section 12.5 “EFI status information and control commands” on page 156). The status of an unallocated protective field is initially by default logical 1.

If you evaluate the status of the protective fields using a Flexi Soft, then on the **Resolution/field mode** tab first select the **Transfer unallocated fields as infringed** option.
If you have selected the **Dual protective fields** field mode, then the **Transfer unallocated fields as infringed** option is selected automatically.

4.4 Incremental encoder

The S3000 Professional and the S3000 Expert have two dual-channel dynamic control inputs using which the possible monitoring cases can be switched as a function of the velocity.

For this purpose incremental encoders must be connected to the dynamic control inputs. Per incremental encoder, one 0°/90° output is required so that the direction of travel can be determined.

If you want to use the inputs C and D as dynamic control inputs, select the **Indicate velocity** option.

4.4.1 Pulses per cm travel that are output by the incremental encoders

The result is dependent on the number of pulses the incremental encoder supplies per revolution, and on the ratio between the wheel on the vehicle and the friction wheel on which the incremental encoder is mounted.

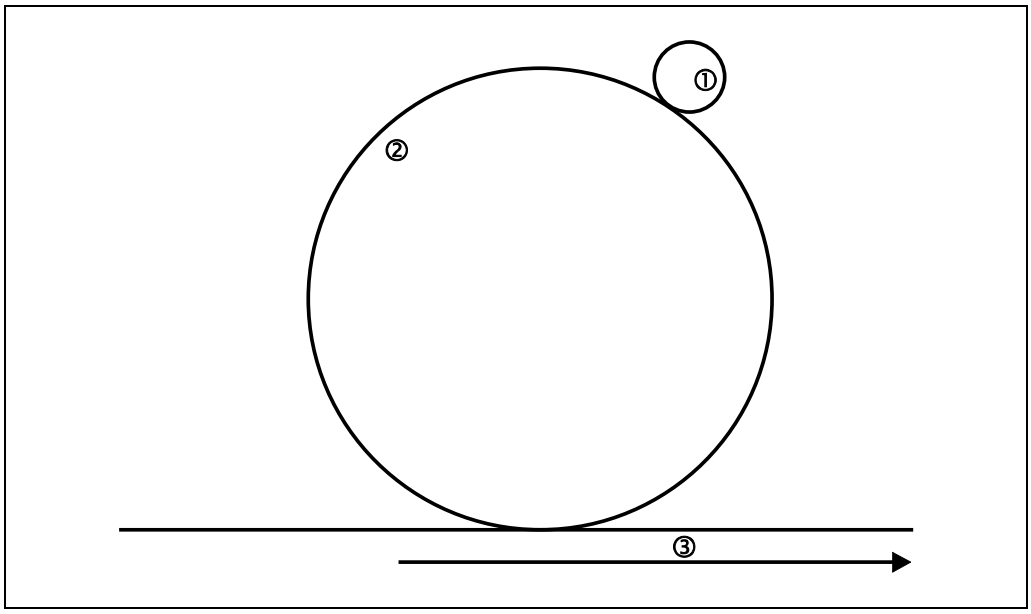

Fig. 17: Calculation of pulses per cm travel
① Friction wheel ∅ 3.5 cm
② Forklift truck wheel ∅ 35 cm
③ Distance covered by the AGV

© SICK AG • Industrial Safety Systems • Germany • All rights reserved

How to calculate the number of pulses per centimeter:

Example:

- The wheel on a forklift truck has a diameter of 35 cm.
- The friction wheel on which the incremental encoder is mounted has a diameter of 3.5 cm.
- The incremental encoder used supplies 1000 pulses per revolution.

Circumference of the forklift truck wheel = d × π = 35 cm × π = 109.96 cm

One revolution of the forklift truck wheel corresponds to ten revolutions of the friction wheel and therefore 10,000 pulses from the incremental encoder.

For this information the number of pulses per centimeter of distance covered by the vehicle is:

pulses/cm = 10,000 : 109.96 = 90.94

On configuring the incremental encoder in the CDS, you must therefore enter the rounded value “91” in **Pulses per centimeter** in the CDS. The user software calculates from this value the maximum velocity allowed.

© SICK AG • Industrial Safety Systems • Germany • All rights reserved

4.4.2 Tolerances allowed on the dynamic inputs

As a rule the same pulse frequency is present at the dynamic inputs when a vehicle moves in a straight line. On driving around bends or in case of wear e.g. of the vehicle's tires, the values at the two inputs may, however, vary.

The velocities from the two incremental encoders may only differ from each other by a tolerance that can be configured. Deviations are allowed only for a certain time window (see fig. below) depending on the velocity.

The maximum percentage deviation between the two encoder velocities that can be configured is 45 %. During this process the higher of the two velocities (irrespective of whether with positive or negative sign) is used as the reference for this calculation as well as the vehicle velocity.

Exceeding the tolerance is tolerated for a certain period of time. Then the system switches to a safe state (lock-out). The period of time is dependent on the vehicle velocity. Fig. 18 shows the deviations that are tolerated and for how long.

Fig. 18: Tolerances allowed on the dynamic inputs

Velocity on input C

Velocity on input D

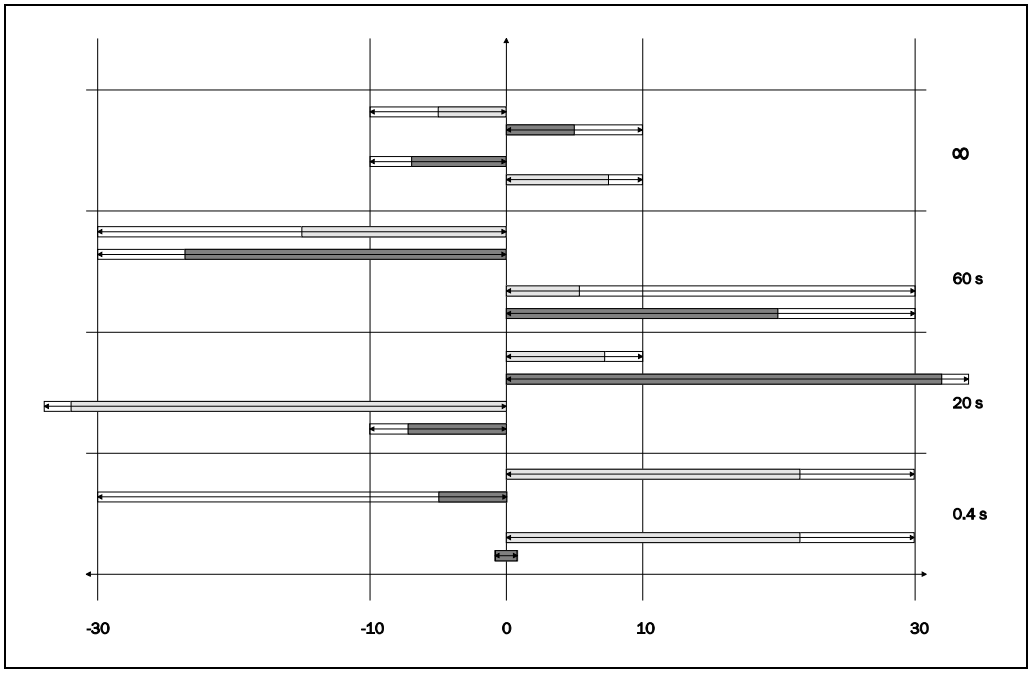

- If the vehicle velocity is in the range between –10 cm/s and +10 cm/s, then there is no shut down, irrespective of how long the deviation between the incremental encoders is present.
- If the vehicle velocity is between –30 and –10 cm/s or +10 and +30 cm/s, then the maximum period of time for which a deviation is tolerated is 60 s.
- If the vehicle velocity is in the range ≤–30 cm/s or ≥+30 cm/s, then the maximum period of time for which a deviation is tolerated is 20 s.
- If the vehicle velocity is in the range ≤–10 cm/s or ≥+10 cm/s, then different directions of rotation on the incremental encoders are only tolerated for 0.4 s.

Note You can disable the tolerance ranges by switching to a monitoring case in which a limit velocity is monitored (see section 4.10.2 "Monitoring case switching via velocity information" on page 60).

© SICK AG • Industrial Safety Systems • Germany • All rights reserved

4.5 Inputs

It is possible to switch between the monitoring cases of the S3000 during operation. There are various ways of achieving this switching:

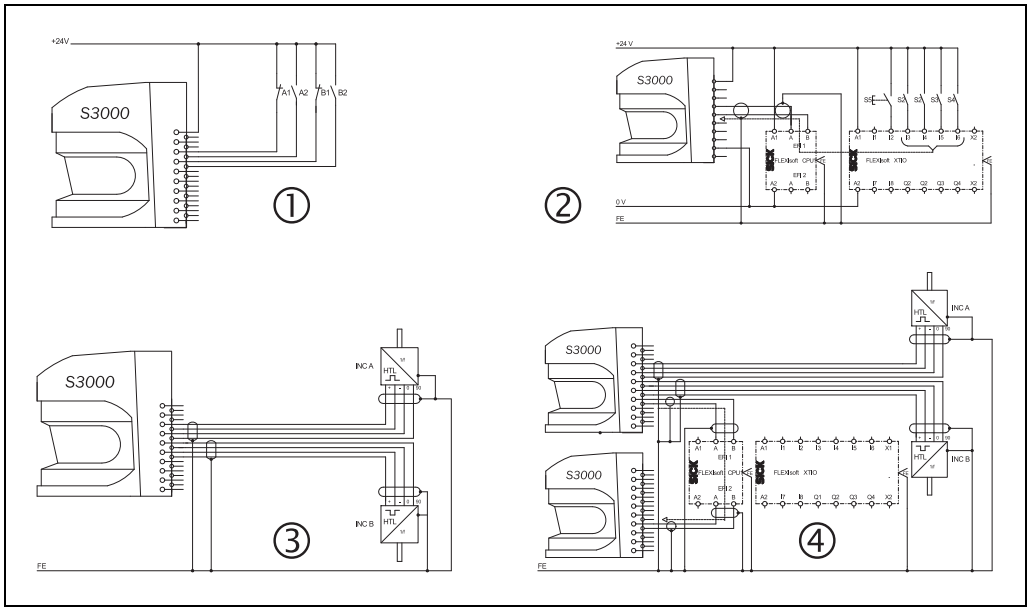

Fig. 19: Possible ways of monitoring case switching
① Local static inputs
② External static inputs via EFI
③ Local dynamic inputs
④ Velocity information via EFI

- static control inputs on the S3000 Advanced, Professional and Expert
  - locally on the S3000
  - externally via EFI (e.g. using a Flexi Soft safety controller)
- dynamic control inputs for the connection of incremental encoders on the S3000 Professional and Expert
  - locally on the S3000
  - externally via EFI (e.g. using another S3000)
- static and dynamic control inputs for the connection of incremental encoders on the S3000 Expert and Remote
  - externally via EFI (e.g. using another S3000)

Standalone operation

In standalone operation of an S3000 use the local inputs of the S3000.

The S3000 Advanced has **two** dual-channel static control inputs.

The S3000 Professional and the S3000 Expert have **four** dual-channel control inputs. Of these four control inputs, two are static (A and B), the other two (C and D) can be used as both static control inputs and also dynamic control inputs.

Activate the inputs you want to use for monitoring case switching.

If you activate the **Use velocity** option, you can use velocity ranges for monitoring case switching.

EFI system

If devices are connected together via EFI, the S3000 can receive control commands from other devices, e.g. a second S3000 or Flexi Soft safety controller. Tab. 43 on page 158 shows the possible control commands of the S3000.

In an EFI system you configure which device you want to use for obtaining the input information.

If the S3000 is connected to a Flexi Soft safety controller, up to five dual-channel control inputs can be configured.

© SICK AG • Industrial Safety Systems • Germany • All rights reserved

4.5.1 Input delay

If the control device via which you switch the static control inputs cannot switch within 10 ms (for 60 ms basic response time) or 20 ms (for 120 ms basic response time) to the related input condition (e.g. due to switch bounce times), you must configure an input delay. For the input delay choose the time in which your defined control device can switch to a corresponding input condition.

Independent of the basic response time chosen for the S3000, you can increase the input delay in 30-ms steps (for 60 ms basic response time) or 60-ms steps (for 120 ms basic response time).

The following figures, based on experience, give input delays for various methods of switching:

Tab. 11: Figure from experience for the necessary input delay

Switching method	Input delay required
Electronic switching using controller or complementary electronic outputs with 0 to 10 ms bounce time	10 ms
Contact (relay) controls	30-150 ms
Control using independent sensors	130-480 ms

Note Also pay attention to the notes in section 5.6 “Time for monitoring case switching” on page 86.

4.5.2 Sampling for the static control inputs

If you are using static sampling, decide between complementary or 1-of-n sampling depending on the control features available. Depending on this selection you can define the switching criteria for the monitoring cases (see section 4.10.1 “Monitoring case switching via static input information” on page 58).

Complementary sampling

One control input comprises two connections. For correct switching one connection must be inverted in relation to the other.

The following table shows the levels that must be present at the connections for the control input to define the logical input state 1 and 0 at the related control input.

Tab. 12: Level at the connections for the control inputs for complementary sampling

A1	A2	Logical input state
1	0	0
0	1	1
1	1	Error
0	0	Error

© SICK AG • Industrial Safety Systems • Germany • All rights reserved

1-of-n sampling

With 1-of-n sampling you use the single connections of the control input pairs.

Tab. 13: Truth table for 1-of-n sampling with two input pairs

A1	A2	B1	B2	Result (e.g. monitoring case no.)
1	0	0	0	1
0	1	0	0	2
0	0	1	0	3
0	0	0	1	4
0	0	0	0	Error
1	1	0	0	Error

Notes

- All connections must be connected.
- Only one connection is ever allowed to be 1.

© SICK AG • Industrial Safety Systems • Germany • All rights reserved

4.6 OSSDs

In an EFI system you define in the CDS which output signal switching device (OSSD) is switched when there is an object in the protective field.

- internal OSSDs
  Defines that the protective field 1 and/or the simultaneous protective field 2 switches the internal OSSDs on S3000.

WARNING

Route the cut-off signals from protective field 2 or simultaneous protective field 2 via the EFI interface to the external OSSDs on a Flexi Soft safety controller!

If you have selected the **Dual protective fields** field mode, then protective field 2 and the simultaneous protective field 2 **do not switch the OSSDs**.

You must therefore route the cut-off signals via the EFI interface to the external OSSDs on a Flexi Soft safety controller.

- external OSSDs
  The S3000 transmits the status of the field sets (protective field/warning fields) via EFI. The OSSDs on another device connected via EFI have switched.
  - Connected safety laser scanner: The OSSDs on the second safety laser scanner are switched.
  - Connected safety controller (e.g. Flexi Soft): The OSSDs on the safety controller are switched depending on its configuration.
  - Connected network solution (e.g. safety remote I/O): The information is passed via the network e.g. to an FPLC that must shutdown the dangerous state.

WARNING

Do not use the OSSD bit for safety relevant functions!

If the local OSSDs on the S3000 are not used, the OSSD state is always transferred as active via EFI. In this case the OSSD bit in the Flexi Soft safety controller is not allowed to be used for safety-related functions.

Use the status information from the protective fields instead!

The status of the protective fields is transmitted using EFI and can be combined in the Flexi Soft safety controller as required. The signal of the safety outputs on the Flexi Soft safety controller is transferred, e.g., to a machine or vehicle control.

WARNING

Pay attention to the logical values for the protective field status information on transfer to the Flexi Soft safety controller!

The status of an evaluated protective field is logical 1 if the protective field is unoccupied. The status is logical 0 if the protective field is infringed (see section 12.5 “EFI status information and control commands” on page 156). The status of a protective field that is not evaluated is initially by default logical 1.

If you evaluate the status of the protective fields using Flexi Soft, then on the **Resolution/field mode** tab first select the **Transfer unallocated fields as infringed** option.In this way the status of protective fields that are not evaluated is set to 0.

© SICK AG • Industrial Safety Systems • Germany • All rights reserved

4.6.1 External device monitoring (EDM)

The EDM checks if the contactors actually de-energize when the protective device is tripped. If you activate external device monitoring, then the S3000 checks the contactors after each interruption of the protective field and prior to the machine restart. The EDM can so identify if one of the contactors has welded, for instance. In this case the external device monitoring places the system in a safe operational state and the OSSDs are not switched back to the ON state.

The table shows how the S3000 reacts if the external device monitoring detects a contactor malfunction:

Tab. 14: Behavior of the S3000 on a contactor malfunction

Without internal restart interlock or with restart delay	• The system locks completely (lock-out). • The error message 8. appears in the 7-segment display.
With restart interlock	• The S3000 switches its OSSDs to the OFF state. • The LED STOP is illuminated. • The error message 8. appears in the 7-segment display.

Notes

You can configure the external device monitoring in the CDS.

- You will find examples on the connection of the external device monitoring in section 7.5 “Connection diagrams” on page 111.
- If you do not use the external device monitoring function, leave this input disconnected (see section 6.1.1 “Pin assignments of the I/O modules” on page 97).

© SICK AG • Industrial Safety Systems • Germany • All rights reserved

4.7 Restart

You can configure the restart behavior of the S3000 as follows:

- without restart interlock
- with restart delay
- with restart interlock

You can configure the type of restart in the CDS.

WARNING

It is imperative that you configure the S3000 with restart interlock if the protective field can be left to approach the hazardous point or if a person cannot be detected at every point in the hazardous area for the S3000!

During the assessment, pay attention to whether the protective field can be left in the direction of the hazardous point, to areas that are unprotected due to the mounting and the unprotected near range of the S3000 (see section 5.4.4 “Methods of preventing unprotected areas” on page 82).

Restart behavior on the integration of the S3000 into a Flexi Soft safety controller

The effectiveness of a restart interlock/delay configured in the S3000 is dependent on the integration of the EFI status information from the S3000 in the logic of the Flexi Soft safety controller:

- The internal restart interlock/delay acts on the OSSD of the S3000. If the status information on the OSSDs is used in the Flexi Soft safety controller, then the restart interlock/delay also acts on the Flexi Soft safety controller.
- If the status information on the protective fields is used in the Flexi Soft safety controller, the restart interlock/delay does **not** affect the Flexi Soft safety controller (see section 12.5 “EFI status information and control commands” on page 156). In this case you must realize a restart interlock/delay in the Flexi Soft safety controller.

Configuration of the S3000 without restart interlock

After the OSSDs on the S3000 have been switched to the OFF state due to an object in the protective field, the OSSDs are re-enabled again immediately when there is no longer an object in the active protective field.

This configuration is only allowed ...

- if an external restart interlock is realized on the machine controller

or

- if the protective field **cannot** be left in the direction of the hazardous point and if people can be detected by the at every point in the hazardous areaS3000!

Restart delay for mobile applications

In mobile applications you can configure a restart delay from 2 to 60 seconds on the S3000. The OSSDs on the S3000 switch to the ON state if there is no object in the protective field for the duration given.

This configuration is only allowed if the protective field **cannot** be left in the direction of the hazardous point and if a person can be detected **at every point in the hazardous area** by the S3000!

© SICK AG • Industrial Safety Systems • Germany • All rights reserved

Configuration of the S3000 with restart interlock

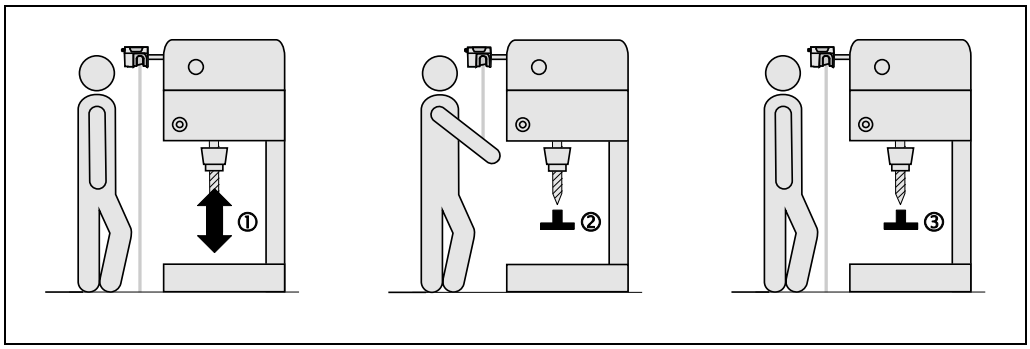

Fig. 20: Schematic outline of the operation with restart interlock

Note Do not confuse the restart interlock with the starting interlock on the machine. The starting interlock prevents the machine starting after switching on. The restart interlock prevents the machine starting again after an error or a protective field infringement.

The OSSDs on the S3000 switch to the OFF state to initiate a machine ① or vehicle stop as soon as there is an object in the protective field ②. They do not switch to the ON state ③, even if there is no longer an object in the protective field. The OSSDs only switch to the ON state if the operator operates the control switch for restart or reset.

WARNING

Place the control switch for restart or reset outside the hazardous area in a place where it can clearly be seen from the hazardous area!

Place the control switch for restart or reset outside the hazardous area such that it cannot be operated by a person in the hazardous area. Ensure that the person who operates the control switch has a full view of the hazardous area.

Notes

- You will find examples on the connection of the internal restart interlock in section 7.5 “Connection diagrams” on page 111.
- If you do not use the internal restart interlock, leave the inputs disconnected (see section 6.1.1 “Pin assignments of the I/O modules” on page 97).

Reset

Note The reset function is often also called “preparation for restart”. In these operating instructions the term **reset** is used.

If you want to activate the restart interlock on the S3000 (internal) and also a restart interlock on the machine (external), then each restart interlock has its own control switch.

After operating the control switch for the internal restart interlock (with protective field unoccupied) ...

- the S3000 switches its OSSDs to the ON state.
- the LED ✓ on the safety laser scanner illuminates green.

The external restart interlock prevents the machine from restarting. After resetting the S3000 the operator must press the control switch to restart the machine controller.

WARNING

Ensure that the correct sequence is followed!

The controller must be realized such that the machine only restarts if the S3000 is first reset and then the control switch for restarting the machine controller is operated.

© SICK AG • Industrial Safety Systems • Germany • All rights reserved

4.8 Universal I/O connections

WARNING

You are not allowed to use the universal I/O connections for safety-relevant functions!

You are only allowed to use the universal I/O connections for signaling. You must never use the signals for controlling the application or for safety-relevant functions.

The S3000 has three universal I/O connections. You can configure these three connections for one or more of the following functions (OR operator):

- contamination warning
- contamination error
- reset required
- error
- protective field
- protective field 2 (if the **Dual protective fields** field mode and the **Simultaneous field evaluation** function have been selected)
- warning field
- simultaneous protective field
- simultaneous protective field 2 (if the **Dual protective fields** field mode and the **Simultaneous field evaluation** function have been selected)
- simultaneous warning field or 2nd warning field (depending on the configured field mode)
- protective field of a connected guest
- protective field of a connected guest (if the **Dual protective fields** field mode and the **Simultaneous field evaluation** function have been selected)
- simultaneous protective field of a connected guest
- warning field of a connected guest
- simultaneous warning field or 2nd warning field of a connected guest (depending on the configured field mode)

The universal I/O connections are configured in the CDS in the **Universal I/O** area. Fig. 21 shows a configuration example.

Fig. 21: Configuration example universal I/O connections of the S3000

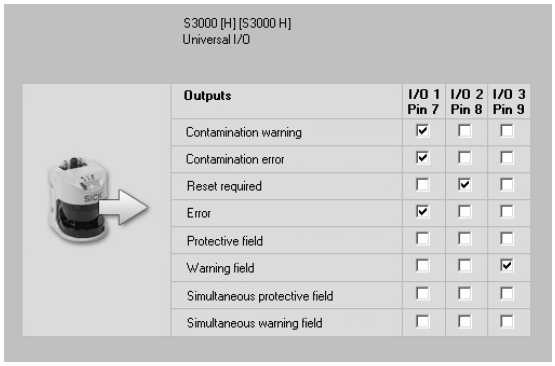

Note If you operate the S3000 in the compatibility mode, then the connections on the universal I/O are used as application diagnostic output, warning field output and application diagnostic output for reset required.

© SICK AG • Industrial Safety Systems • Germany • All rights reserved

4.8.1 Application diagnostic output in the compatibility mode

The S3000 variants have a configurable application diagnostic output in the compatibility mode. For the application diagnostic output you configure in the CDS ...

- whether it is deactivated.
- whether a signal is only output when the front screen is contaminated.
- whether a signal is only output on errors.
- whether a signal is output both for front screen contamination and on errors.

4.9 Field sets

The number of field sets that can be configured is dependent on the safety laser scanner variant.

On the S3000 Expert and S3000 Remote the number of field sets that can be configured is also dependent on the field mode selected (dual field mode/dual protective field mode/ triple field mode) and the angular resolution configured. The following table shows the number of field sets per variant and application:

Tab. 15: Number of field sets that can be configured per variant and use

Standard	Advanced	Professional	Expert	Remote
Dual field mode/dual protective field mode				
Configured angular resolution 0.5°				
1	4	8	32	32
Configured angular resolution 0.25°				
1	4	8	16	16
Triple field mode				
Configured angular resolution 0.5°				
1	4	8	21	21
Configured angular resolution 0.25°				
1	4	8	10	10

© SICK AG • Industrial Safety Systems • Germany • All rights reserved

4.9.1 Configuring the protective field and warning field

With the aid of the CDS you can configure the field set, which comprises a protective field ① and depending on the selected field mode one or two warning fields ② (see section 4.3.4 “Field mode” on page 39). During this process you configure the shape and size of the protective and warning fields. You can realize any field shape required.

Fig. 22: Creating a field set in the CDS

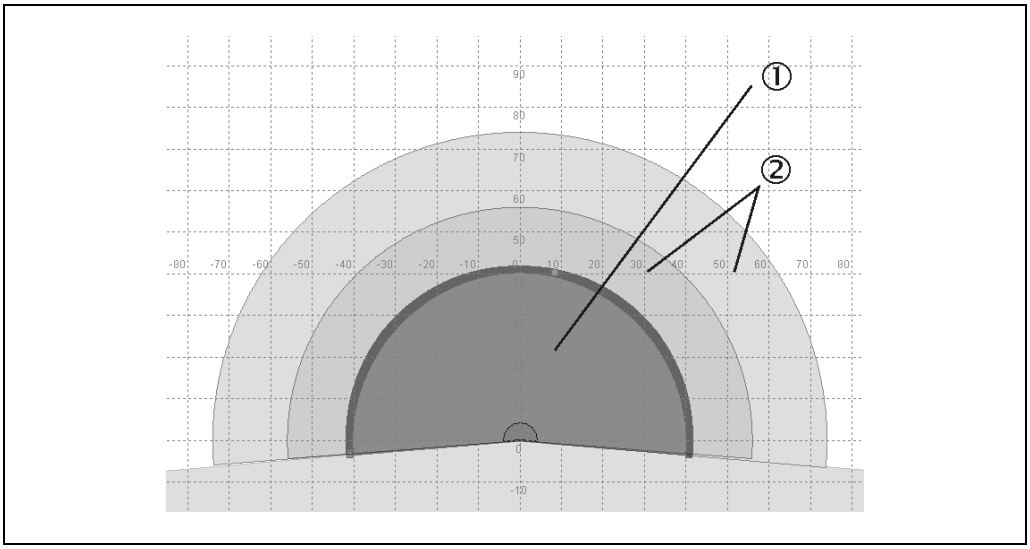

Note The area to be monitored is scanned radially by the S3000. The S3000 cannot see through objects during this process. The area behind objects that are in the area to be monitored (pillars, grilles, etc.) can thus not be monitored.

Protective fields and warning field can cover up an angle of up to 190° and have different radial scanning ranges depending on the sensor head and the resolution configured (see section 4.3.1 “Resolution” on page 38).

WARNING

Check the protective fields configured!

Prior to commissioning the machine or vehicle, check the configuration of the protective fields. Please observe the notes in chapter 9 “Commissioning” on page 120 and in the checklist on page 168.

© SICK AG • Industrial Safety Systems • Germany • All rights reserved

Note If the protective field ③ or the warning fields ② stretch as far as a wall or another object (pillar, neighboring machine, shelf), there should be a distance of 100 mm between the protective field or warning field and the object ① to prevent false triggering.

Fig. 23: Configuring protective field and warning field

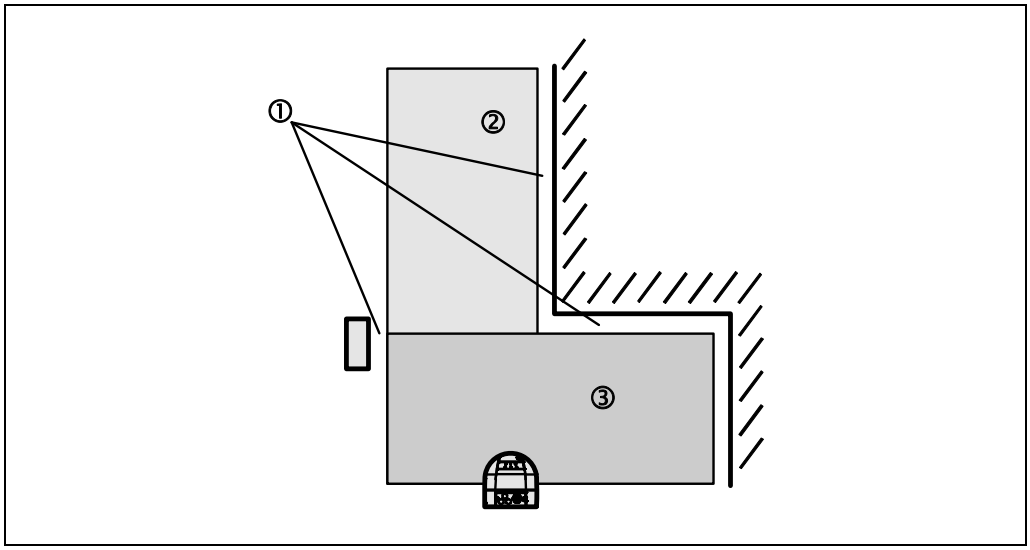

WARNING

Secure unprotected areas!

If it is possible to access a narrow strip between the protective field and a wall or another object, you must protect this strip using additional measures (e.g. fence or floor protection).

© SICK AG • Industrial Safety Systems • Germany • All rights reserved

4.9.2 Protective field or warning field suggested by the safety laser scanner

The CDS can suggest the protective field or warning field in the field set editor. The safety laser scanner scans the visible surrounding contour several times. From the data obtained the CDS suggests the contour and size of the field. The following figure shows an example for the reading of a protective field:

Fig. 24: Reading the protective field

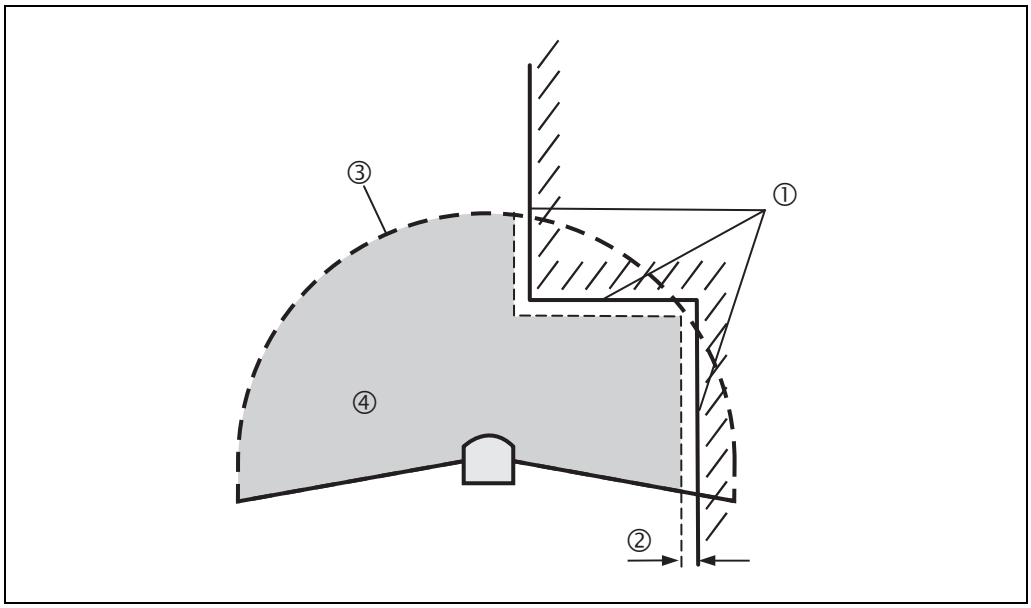

In those places at which the surrounding contour is smaller than the maximum protective field range (e.g. at ①), the protective field ④ corresponds to the surrounding contour.

Note The measuring error tolerances for the S3000 are automatically subtracted from the protective field size. As a result the protective field is slightly smaller than the surface covered ②.

In those places where the surrounding contour is larger than the protective field range ③, the protective field corresponds to the possible scanning range.

WARNING

Check the protective field suggested!

The protective field suggested by the CDS is not a replacement for the calculation of the minimum distance. Calculate the minimum distance and check the effectiveness of the protective fields prior to commissioning the application!

Pay attention to the descriptions in chapter 5 “Mounting” on page 66, the notes in chapter 9 “Commissioning” on page 120 and the checklist on page 168.

© SICK AG • Industrial Safety Systems • Germany • All rights reserved

4.9.3 Using the contour as a reference

In addition to the protective field, the S3000 can also monitor a contour (e.g. the floor in vertical applications or the wall in horizontal applications).

Fig. 25: Schematic diagram of contour as reference

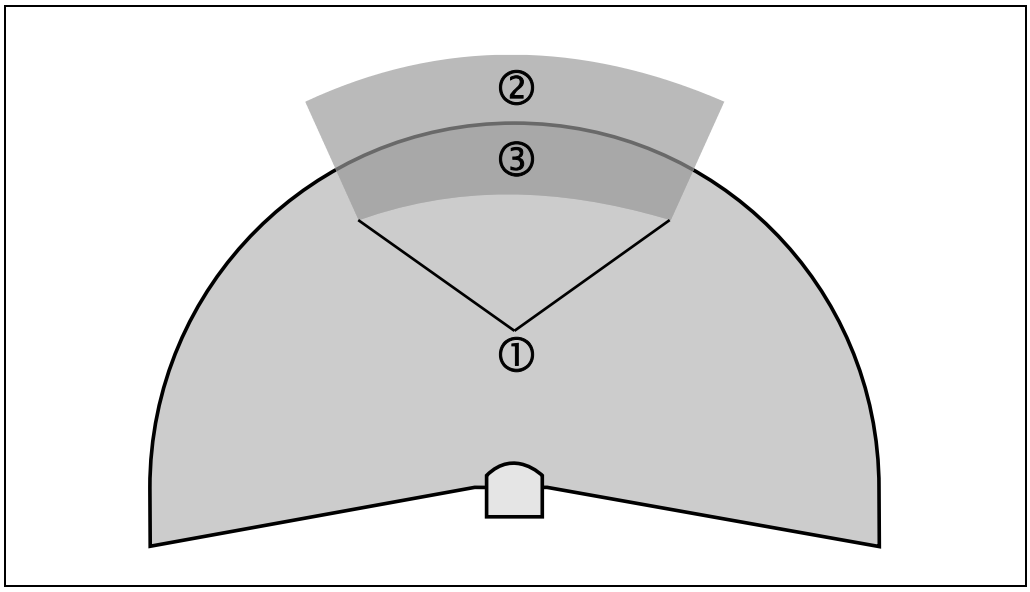

For contour monitoring you define a contour segment ①. The contour segment comprises a positive ② and a negative ③ tolerance band.

The OSSDs on the S3000 switch to the OFF state if ...

- there is an object in the protective field.
- the surrounding contour changes by more than the tolerance band in the contour segment (e.g. by opening a door or by changing the position of the S3000).

Notes

- You can define any number of contour segments.
- The contour segments must not be narrower than the configured resolution.
- At the points where a contour has been configured as a reference you cannot define warning fields. If, for example, you use the floor as a reference for access protection, you cannot configure a warning field there. However, you can, e.g., configure a warning field to the left and right of the contour segment to control a warning signal on approach from the side.

WARNING

Pay attention to the restricted field evaluation in the dual protective field mode!

If the **Dual protective fields** field mode is activated, then in the areas in which a contour is configured as reference, there is no field evaluation of warning fields or protective fields.

You define the contour as a reference in the CDS field set editor.

© SICK AG • Industrial Safety Systems • Germany • All rights reserved

Vertical operation

In vertical operation (for access protection and hazardous point protection) according to IEC 61496-3 you **must** always configure the protective fields used with the contour as reference function. In addition the total response time of the S3000 is not allowed to exceed 90 ms.

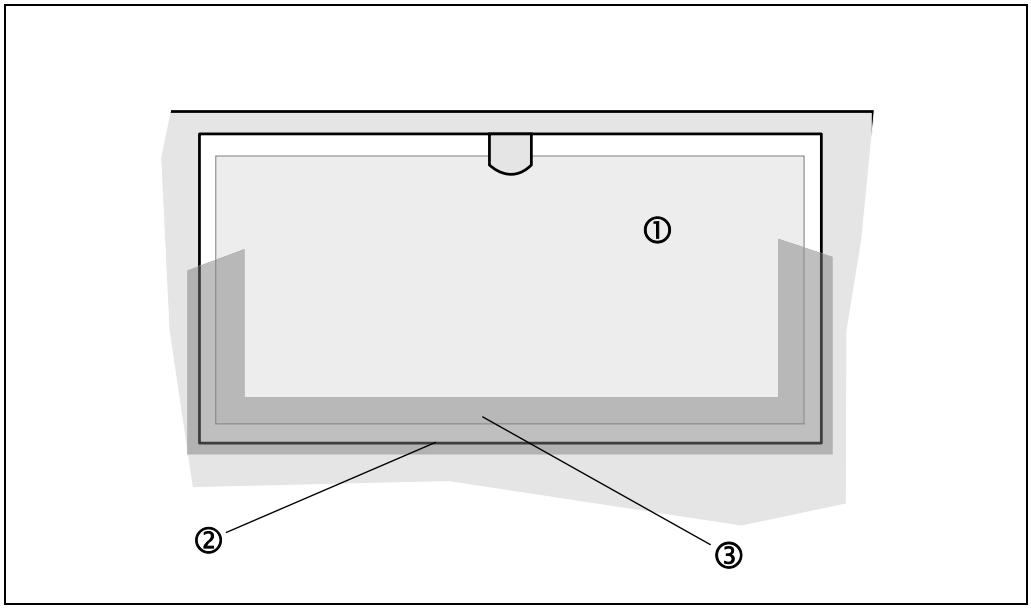

Fig. 26: Contour as reference for vertical operation
① Protective field
② Contours of the machine opening
③ Contour segment

Recommendation

Use lateral, vertical boundaries of the opening (e.g. door frame) and the floor as reference. If in this case the position of the S3000 is changed in one or more planes, the distance to the reference changes and the S3000 switches its OSSDs to the OFF state.

© SICK AG • Industrial Safety Systems • Germany • All rights reserved

4.10 Monitoring cases

The S3000 supports a configuration with multiple monitoring cases. By switching the monitoring case you can switch to different monitoring conditions in the case of a change to the monitoring situation.

WARNING

Ensure for each monitoring case that the minimum distance to the hazardous area is maintained!

See chapter 5 “Mounting” on page 66.

The number of monitoring cases that can be configured is dependent on the variant and on the control. The following table shows the number of monitoring cases:

Tab. 16: Number of monitoring cases per variant and application

Standard	Advanced	Professional	Expert	Remote
Applications with local static control inputs on the S3000				
1	4	16	16	–
Applications with static control inputs via EFI (e.g. on a Flexi Soft)				
32	32	32	32	32
Applications with local dynamic control inputs on the S3000				
–	–	32	32	–
Applications with dynamic control inputs via EFI				
32	32	32	32	32

You can configure the monitoring cases in the CDS.

Each monitoring case includes ...

- the input conditions, the so-called control signals, that control the activation of the monitoring case.
- a field set, comprising of protective field and warning field or fields.
- if necessary, a simultaneous field set.
- if necessary, a unique follow-on case or two alternative follow-on cases.
- the multiple sampling for the field set.
- the multiple sampling for the simultaneous field set.

Monitoring cases can be switched with the following input information:

- static information
- velocity information
- a combination of both

© SICK AG • Industrial Safety Systems • Germany • All rights reserved

4.10.1 Monitoring case switching via static input information

➢ For monitoring case switching via static input information, configure for each monitoring case the input combination to be used to switch to the monitoring case.

WARNING

When switching the monitoring cases using static control inputs, please note the following points:

➢ Ensure that the control for the monitoring case switching has the required level of safety.

➢ Ensure that the circuit for the control inputs is suitable for the ambient conditions to be expected so that systematic and design-related effects and resulting errors on the switching of the monitoring cases can be excluded.

➢ Ensure that the control — using static control inputs — provides switching between the monitoring cases in the correct time frame. Note that at the time of the switching there may be a person in the protective field. Only by means of switching in the correct time frame (i.e. before the hazard occurs at this point for the person) is protection provided (see section 5.6 “Time for monitoring case switching” on page 86).

Static complementary sampling

Using the two control input pairs on the S3000 Advanced $2^2 = 4$ monitoring cases can be switched, using the four control input pairs on the S3000 Professional and Expert $2^4 = 16$ monitoring cases can be switched.

Using external inputs (e.g. those of a Flexi Soft safety controller, see section 4.5 “Inputs” on page 43), $2^5 = 32$ monitoring cases can be switched via maximally five control input pairs.

Tab. 17: Truth table with complementary evaluation

A	B	C	D	E	E.g. case
0	0	0	0	0	1
1	0	0	0	0	2
0	1	0	0	0	3
1	1	0	0	0	4
0	0	1	0	0	5
1	0	1	1	0	6
0	1	1	0	0	7
1	1	1	0	0	8
...					...
0	1	1	1	0	15
1	1	1	1	0	16
0	0	0	0	1	17
...					...
0	1	1	1	1	31
1	1	1	1	1	32

Note Undefined input information will result in the S3000 switching the OSSDs to the OFF state or signaling **Protective field infringed** via EFI.

© SICK AG • Industrial Safety Systems • Germany • All rights reserved

Static 1-of-n sampling

With 1-of-n sampling you use the single connections of the control input pairs. In this way the S3000 Advanced provides four and the S3000 Professional/Expert eight input connections.

Notes

- Using external inputs (e.g. those of a Flexi Soft safety controller, see section 4.5 “Inputs” on page 43) maximally ten input connections can be used.
- All connections must be connected!
- One connection must be 1!
- Only one connection is ever allowed to be 1!

Tab. 18: Truth table for 1-of-n sampling

A1	A2	B1	B2	C1	C2	D1	D2	E1	E2	E.g. case
1	0	0	0	0	0	0	0	0	0	1
0	1	0	0	0	0	0	0	0	0	2
0	0	1	0	0	0	0	0	0	0	3
0	0	0	1	0	0	0	0	0	0	4
0	0	0	0	1	0	0	0	0	0	5
0	0	0	0	0	1	0	0	0	0	6
0	0	0	0	0	0	1	0	0	0	7
0	0	0	0	0	0	0	1	0	0	8
0	0	0	0	0	0	0	0	1	0	9
0	0	0	0	0	0	0	0	0	1	10
1	1	0	0	0	0	0	0	0	0	Error
0	0	0	1	1	0	0	0	0	0	Error
0	0	0	0	0	0	0	0	0	0	Error
And all other combinations										Error

© SICK AG • Industrial Safety Systems • Germany • All rights reserved

4.10.2 Monitoring case switching via velocity information

WARNING

When switching the monitoring cases using dynamic control inputs, please note the following points:

➢ Ensure that the control — using dynamic control inputs (incremental encoder inputs) — provides switching between the monitoring cases in the correct time frame. Note that at the time of the switching there may be a person in the protective field. Only by means of switching in the correct time frame (i.e. before the hazard occurs at this point for the person) is protection provided (see section 5.6 “Time for monitoring case switching” on page 86).

➢ Ensure that only one safety laser scanner is connected to an incremental encoder.

- Two incremental encoders are necessary to detect a possible fault in one encoder.

➢ It is imperative you lay the connecting cables to the incremental encoders separately.

Prerequisites

For dynamic sampling using incremental encoders, configure ...

- the **Use velocity** option (see section 4.5 “Inputs” on page 43).
- for each monitoring case the velocity range for switching to the monitoring case.

Example:

• Monitoring case 1 (standstill)	–10 ... +10 cm/s
• Monitoring case 2 (forward movement 1)	11 ... 50 cm/s
• Monitoring case 3 (forward movement 2)	51 ... 100 cm/s
• Monitoring case 4 (forward movement 3)	101 ... 200 cm/s

Note During the configuration of the monitoring cases in the CDS, you must cover **all possible or allowed velocities** of the vehicle. An undefined velocity will result in the switching of the OSSDs to the OFF state (useful e.g. for safe maximum velocity monitoring on vehicles).

Disabling tolerance ranges, monitor speed thresholds

Modern applications for autonomous vehicles require additional configuration features for driving around tight bends. The S3000 offers the following additional functions:

- The tolerance ranges shown in Fig. 18 can be disabled if the vehicle is to drive around tight bends and as a result the standard tolerances will result in unintentional shut downs.

➢ On the **Cases** CDS tab choose the **Monitor speed thresholds** function.

If a defined threshold is exceeded, the safety laser scanner shuts down. Velocity differences larger than 45 % are tolerated for 60 seconds. Only if the threshold is exceeded does a shut down occur.

The information on the minimum and maximum velocity is determined for the threshold and in this case is not used for the velocity-dependent monitoring case activation.

Notes

- Warning — The redundant velocity monitoring by the safety laser scanner is deactivated for max. 60 seconds. Ensure the safety requirements for the application are met.
- For safety reasons the 60 seconds criterion must never be exceeded. The safety laser scanner then switches its OSSDs to the OFF state, i.e. tight bends are not allowed to last more than 60 seconds.

© SICK AG • Industrial Safety Systems • Germany • All rights reserved

4.10.3 Velocity routing via EFI

If several safety laser scanners are connected to a Flexi Soft safety controller, then a velocity routing can be configured. In this way the velocity information that is determined by an S3000 Professional or Expert with the aid of incremental encoders is distributed to all safety laser scanners.

Note The velocity routing is not available in the compatibility mode.

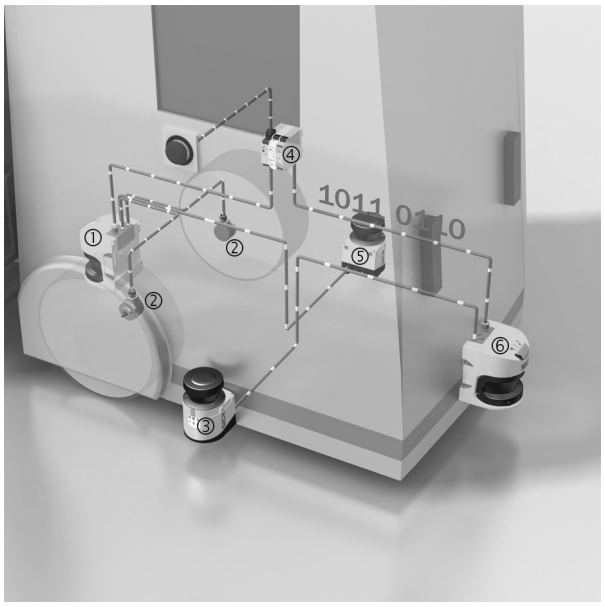

Fig. 27: Example for velocity routing on an AGV
① S3000 Expert on EFI1.1
② Incremental encoder
③ S300 on EFI2.2
④ Flexi Soft
⑤ S300 on EFI1.2
⑥ S3000 on EFI2.1

Incremental encoders ② are connected to the S3000 Expert on EFI1.1 ①. These generate the necessary velocity signals. The signals are distributed by the Flexi Soft safety controller ④ to all **four** safety laser scanners (① and ⑤ as well as ③ and ⑥) and are available on all **four** safety laser scanners for monitoring case switching.

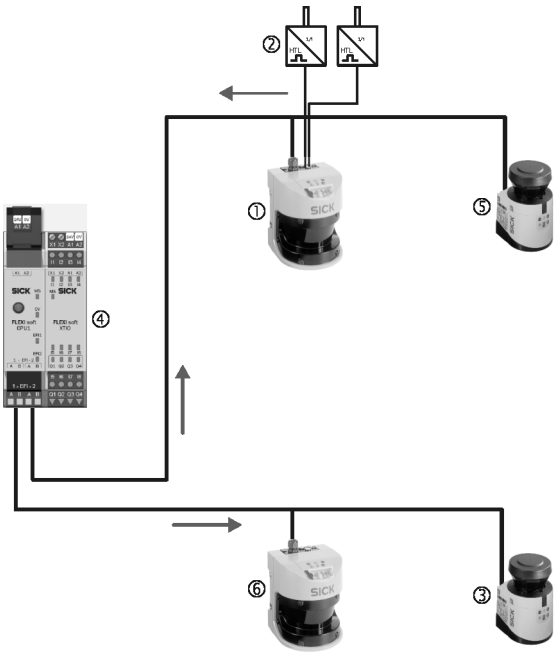

Fig. 28: Connection diagram for velocity routing
① S3000 Expert on EFI1.1
② Incremental encoder
③ S300 on EFI2.2
④ Flexi Soft
⑤ S300 on EFI1.2
⑥ S3000 on EFI2.1

© SICK AG • Industrial Safety Systems • Germany • All rights reserved

How to configure a velocity routing in the Flexi Soft Designer:

➢ Configure the velocity routing in the Flexi Soft Designer for instance as in the following figure.

Fig. 29: Example for velocity routing in the Flexi Soft Designer

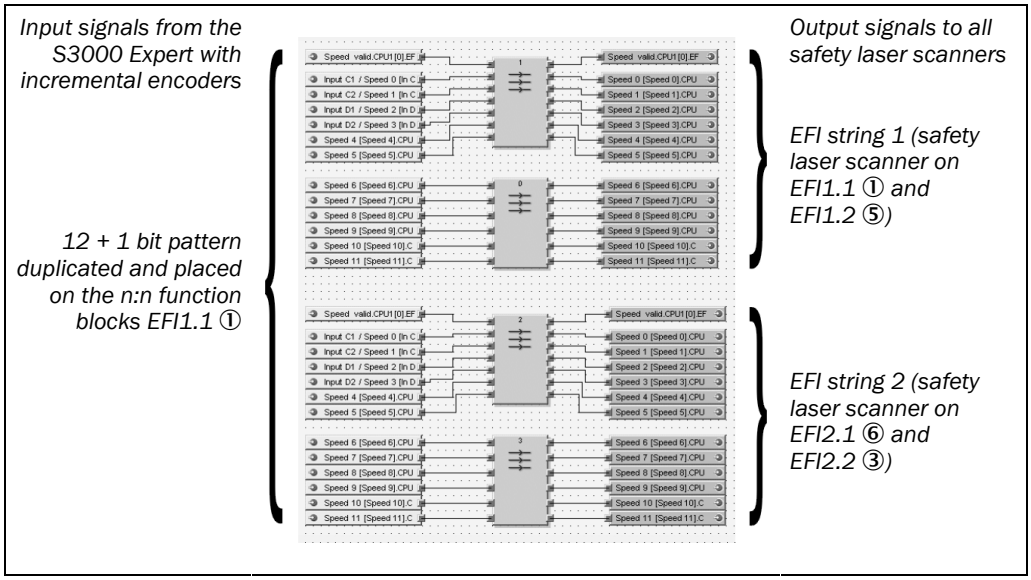

The velocity signals of the S3000 Expert are broken down into a 12 + 1 bit pattern, 12 velocity bits and one bit for validation. These signals are available as input signals, are duplicated and placed **twice** on the n:n function blocks (0 and 1 as well as 2 and 3).

The outputs of the function blocks are placed on EFI string 1 or on EFI string 2. As a result they are available to all four safety laser scanners.

WARNING

The "Speed valid" status information is relevant for safety!

Ensure that the **Speed valid** input signal is connected to the **Speed valid** output signal.

How to configure the safety laser scanners in the CDS:

➢ On the **Incremental encoder** tab for the S3000 Expert to which the incremental encoders are connected, select the **Indicate velocity** option.

All safety laser scanners, also the sending devices, must use these velocity signals via EFI.

➢ For this reason activate **on all** safety laser scanners on the **Inputs** tab the option **Use Flexi Soft CPU1**.

➢ Then, select **on all** safety laser scanners on the **Inputs** tab the **Use velocity** option.

4.10.4 Multiple sampling

If multiple sampling is set, an object must be scanned several times before the S3000 switches its OSSDs to the OFF state. In this way you can reduce the probability that insects, welding sparks or other particles result in the shutdown of the system.

If a multiple sampling of 3 is configured, for instance, an object must be detected in the protective field three times in succession before the S3000 switches the OSSDs to the OFF state.

WARNING

The total response time is increased by the multiple sampling!

With a multiple sampling greater than 2, note that you must add a supplement to the basic response time (see section 12.2 "OSSD response times" on page 144)!

© SICK AG • Industrial Safety Systems • Germany • All rights reserved

On the S3000, a multiple sampling of 2 is the minimum setting. You can set the multiple sampling up to 16 with the aid of the CDS. The supplement to the basic response time resulting from your setting is displayed in the CDS.

Tab. 19: Recommended multiple sampling

	Recommended multiple sampling	
Application	**Basic response time 60 ms**	**Basic response time 120 ms**
Stationary under clean ambient conditions	2 times	2 times
Vertical applications	3 times	–
Mobile	4 times	4 times
Stationary under dusty ambient conditions	8 times	8 times

Recommendation

Using multiple sampling you can increase the availability of a system.

You can configure the multiple sampling in the CDS. You can set individual multiple sampling both for the field set defined and for the simultaneous field set in each monitoring case.

4.10.5 Simultaneous monitoring

Note

On the S3000, simultaneous monitoring can only be configured in the dual field mode or in the dual protective field mode (see Fig. 5 on page 20).

Using simultaneous monitoring, the S3000 can monitor two field sets simultaneously (e.g. hazardous area on the left and hazardous area on the right) within a monitoring case.

- For this purpose choose on the **Resolution/field mode** tab (see section 4.3.4 “Field mode” on page 39) either the **Dual** or **Dual protective fields** field mode.
- Then, on the **Resolution/field mode** tab select the **Simultaneous field evaluation** option.
- If you evaluate the status of the protective fields using Flexi Soft, then on the **Resolution/field mode** tab first select the **Transfer unallocated fields as infringed** option.
  If you have selected the **Dual protective fields** field mode, then the **Transfer unallocated fields as infringed** option is selected automatically.
- Then choose on the **Cases** tab a further field set as a simultaneous field set within the related monitoring case.

On a system with one S3000 the first protective field in both field sets acts on the internal OSSDs in the S3000. In a system with several devices connected via EFI, the both field sets can act on different OSSDs (see section 4.6 on page 46).

You configure a monitoring case with simultaneous field set in the CDS.

© SICK AG • Industrial Safety Systems • Germany • All rights reserved

4.10.6 Checking of the monitoring case switching

To check the switching between monitoring cases, configure a series of monitoring cases. Here you can define either an arbitrary sequence, a unique sequence, or two alternative sequences.

- Arbitrary sequence: It is allowed to switch from one monitoring case to any other defined monitoring case.
- Unique sequence: It is only allowed to switch from a monitoring case to another specifically defined monitoring case.
- Alternative sequence: It is allowed to switch from a monitoring case to one of two specifically defined monitoring cases.

Recommendation Use the monitoring of the monitoring case switching as an additional check on your control. For example, in this way deviations of a vehicle from a corridor or a system from the stipulated production process can be detected.

Fig. 30: Schematic layout of the monitoring case switching

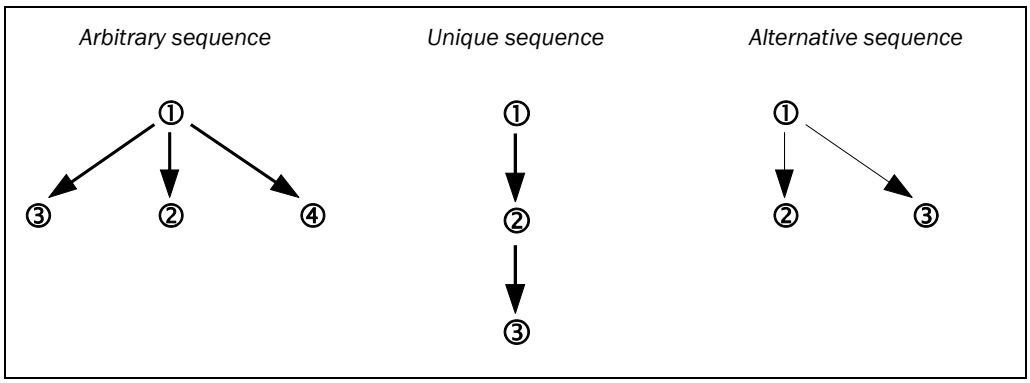

You can configure the sequence of monitoring cases in the CDS.

4.10.7 Park/stand-by mode

If, in mobile applications, vehicles are not moved for a time (e.g. for battery charging), the OSSDs can be switched to the OFF state and the laser on the S3000 can be switched off. In this way the power consumption of the device is reduced.

In this way you also prevent the safety laser scanners from dazzling each other and entering an error condition.

The function can be realized with the aid of the park mode or the stand-by mode

Note If, in an EFI system, you only use the OSSDs on one safety laser scanner (common OSSDs), then the OSSDs on this safety laser scanner will switch to the OFF state as soon as either of the two safety laser scanners is switched to the park/stand-by mode. If, on the other hand, you use the OSSDs on both safety laser scanners (separate OSSDs), then only the OSSDs on the safety laser scanner that is switched to park/stand-by mode will switch to the OFF state.

© SICK AG • Industrial Safety Systems • Germany • All rights reserved

Park mode

To switch to the park mode, configure a monitoring case for which the park mode is defined in the CDS.

The S3000 needs the response time resulting from the configuration to switch from the park mode to another monitoring case.

Stand-by mode via EFI

The S3000 can be switched to the stand-by mode via EFI (see section 12.5 “EFI status information and control commands” on page 156). You will need an external safety controller (e.g. Flexi Soft).

Notes

- The stand-by mode is not available in compatibility mode.
- A monitoring case is not occupied by the stand-by mode.

4.11 Measured data output

For the measured data output configure the **baud rate** of the interface.

You configure whether the **Silent time** is set automatically to 5000 ms or you configure an individual shorter **Silent time** between 60 and 4980 ms. The silent time defines the time, after sending the silent byte, for which the continuous output of data can be interrupted to make it possible to access to the interface. In the default delivery status, the silent time is set to 5000 ms.

With the aid of the **Send mode** option you can configure whether the measured data output is to be triggered as a **Continuous data output** or **Data output only on request**.

You will find further details on this topic in the documentation “Telegram Listing Standard” (part no. 9090807).

CMS functionality on the S3000 Expert

On the S3000 Expert you can configure further parameters, in addition to those described above, for the CMS functionality.

With the aid of the **Send mode** option you can configure whether the measured data output is to be triggered as a **Continuous data output**, **Data output only on request** or by an **Internal event**.

If you have selected **Internal event**, then you must define this event.

With **Continuous data output** you must select which data are to be output.

If you also activate **Measured data output**, then you can select whether the measured data are to be output together with the I/O data in **one telegram** or in **two separate telegrams**.

For the measured data output you define one to four segments (which are defined by start and end angles).

You will find further details on this topic in the documentation “Telegram Listing CMS” (part no. 9090806).

© SICK AG • Industrial Safety Systems • Germany • All rights reserved

5 Mounting

This chapter describes the preparation and completion of the mounting of the S3000 safety laser scanner.

Mounting requires four steps:

- definition of the application and the necessary mounting location for the safety laser scanner
- calculation of the protective field sizes and minimum distances (see EN ISO 13855)

  You can enter the calculated protective field sizes with the aid of the CDS. Or leave the S3000 to suggest the protective fields. In the latter case check whether the suggested sizes correspond to those calculated. Thus in any circumstance you must calculate the protective field size.
- definition of the switching point between monitoring cases
- mounting the safety laser scanner with or without mounting kits

WARNING

No protective function without sufficient minimum distance!

Only if you configure the protective field such that there is an adequate minimum distance to the hazardous area, is protection by the S3000 ensured.

Notes

- ➢ Mount the S3000 in a dry place and protect the device from dirt and damage.
- ➢ Avoid strong electrical fields. These can, e.g., be produced by welding cables, induction cables in the immediate vicinity and also by mobile telephones operated nearby.
- ➢ Ensure that there are no obstacles in the area to be monitored in the field of view of the S3000 that could cause interference or shadowing. Such shadowed areas cannot be monitored by the S3000. If there are unavoidable shadowed areas, check whether there is a risk. Take additional safety precautions as necessary.
- ➢ Keep the area to be monitored free of smoke, fog, steam or other forms of air impurities. Otherwise the function of the S3000 may be impaired and incorrect switching may occur.
- ➢ Avoid placing highly reflective objects in the scan plane of the S3000. Examples: Retroreflectors can affect the measurement results of the S3000. Reflective objects can blank part of the area to be monitored.
- ➢ Mount the S3000 such that it is not dazzled by incident sunlight. Do not position stroboscopic and fluorescent lights directly in the scan plane as these may affect the S3000 in specific circumstances.
- ➢ Mark the protective field on the floor, if appropriate for the application (see IEC 61496, part 1, chapter 7).

The following steps are necessary after mounting:

- completing the electrical connections (chapter 6 “Electrical installation”)
- configuration of the protective field (chapter 8 “Configuration”)
- commissioning and checking of the installation (chapter 9 “Commissioning”)
- checking the function and safe shutdown (section 9.2 “Test notes”)

© SICK AG • Industrial Safety Systems • Germany • All rights reserved

5.1 Stationary application in horizontal operation

This type of protective device is suitable for machines and systems on which, e.g. a hazardous area is not completely enclosed by a guard.

Fig. 31: Horizontally mounted stationary application

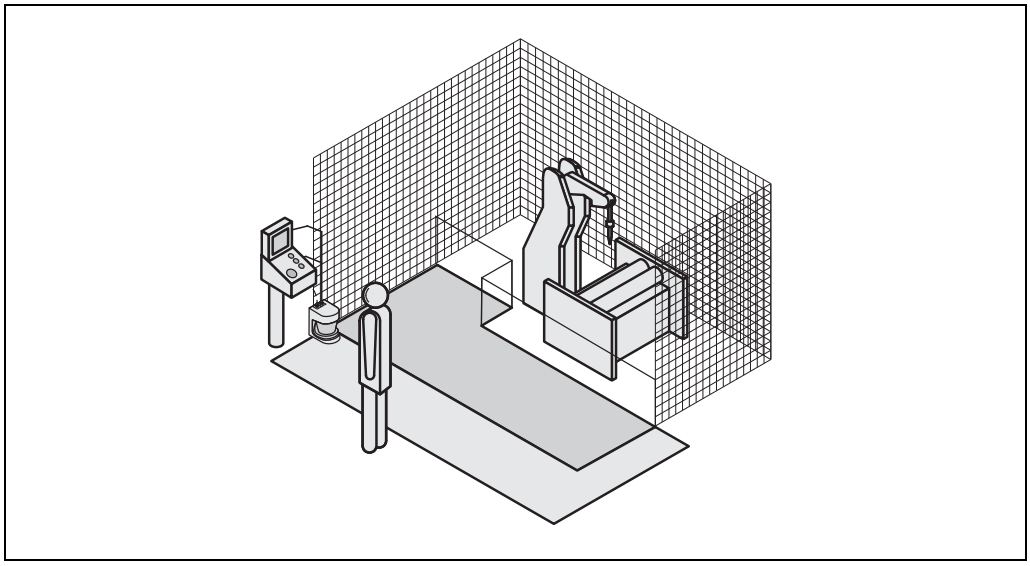

For a horizontally mounted stationary application determine ...

- the protective field size to observe the necessary minimum distance.
- the height of the scan plane.
- the restart behavior.
- measures to protect areas not covered by the S3000.

Note Once you have defined the protective field size, mark the boundaries of the protective field on the floor. In this way you will make the protective field boundaries visible for the operator and ease subsequent testing of the protective function.

© SICK AG • Industrial Safety Systems • Germany • All rights reserved

5.1.1 Protective field size

The protective field must be so configured that a minimum distance (S) to the hazardous area is maintained. This safety distance ensures that the hazardous point can only be reached after the dangerous state of the machine has been completely stopped.

Note If you define several monitoring cases with different protective fields, you must calculate the protective field sizes for all protective fields used.

You can operate the S3000 in stationary horizontal operation with 50 mm or with 70 mm resolution. For each resolution you can choose between 60 ms and 120 ms response time. The maximum protective field range results from the resolution and the response time[20)] of the S3000

- If you choose a 50 mm resolution, the maximum protective field range is less than for a 70 mm resolution, however you can mount the S3000 as low as required.
- If you choose a 70 mm resolution, you can configure the largest protective field range, but you must position the scan plane of the S3000 at 300 mm.

WARNING

Ensure that a human leg can be detected in horizontal stationary applications with 70 mm resolution!

Mount the scan planes for horizontal stationary applications with 70 mm resolution at a height of at least 300 mm (see “Height of the scan plane at 70 mm resolution” on page 72).

Recommendation Due to the choice of two resolutions and two response times, it may be necessary to repeatedly calculate the protective field size (iterative calculation).

➢ Perform your protective field calculation initially based on a resolution of 50 mm and a basic response time of 60 ms.

➢ If the calculated protective field is larger than the maximum protective field range at 50 mm resolution, calculate it again using the same resolution and the higher response time.

➢ If the protective field calculated is larger than the maximum protective field range achievable, then re-calculate the protective field with the coarser resolution.

The minimum distance S depends on:

- approach speed of the body or parts of the body
- stopping/run-down time of the machine or system (the stopping/run-down time is shown in the machine documentation or must be determined by taking a measurement)
- response time of the S3000
- supplements for general measurement errors and any measurement errors related to reflection
- supplement for prevention of reaching over
- height of the scan plane
- possibly the time for switching between the monitoring cases

[20)] Radial distance to the safety laser scanner.

© SICK AG • Industrial Safety Systems • Germany • All rights reserved

How to calculate the minimum distance S (see EN ISO 13 855):

➢ First, calculate S using the following formula:

$S = (K \times (T_M + T_S)) + Z_G + Z_R + C$

Where ...

K = Approach speed (1600 mm/s, defined in EN ISO 13 855)
T_M = Stopping/run-down time of the machine or system
T_S = Response time of the S3000 and the downstream controller
Z_G = General safety supplement = 100 mm
Z_R = Supplement for measurement error related to reflection
C = Supplement for prevention of reaching over

Response time T_S of the S3000

The response time T_S of the S3000 depends on ...

- the resolution used.
- the multiple sampling set.
- the transmission speed to external OSSDs over EFI.

See section 12.2 “OSSD response times” on page 144.

Supplement Z_R for measurement errors caused by reflection

WARNING

Avoid mounting retroreflectors at a distance of less than one meter from the boundary of the protective field!

With retroreflectors positioned at a distance of less than 1 m from the boundary of the protective field a supplement, Z_R, of 200 mm must be added to the protective field.

© SICK AG • Industrial Safety Systems • Germany • All rights reserved

Supplement C for protection against reaching over

With a protective field installed horizontally, there is a risk that people may reach over the protective field and in this way reach the hazardous area before the S3000 shuts down the dangerous state. For this reason the calculation of the minimum distance must take into account a supplement to prevent persons from finding themselves in a hazardous situation by reaching over (see EN ISO 13857, table 1) before the S3000 triggers.

Fig. 32: Danger of reaching over (mm)

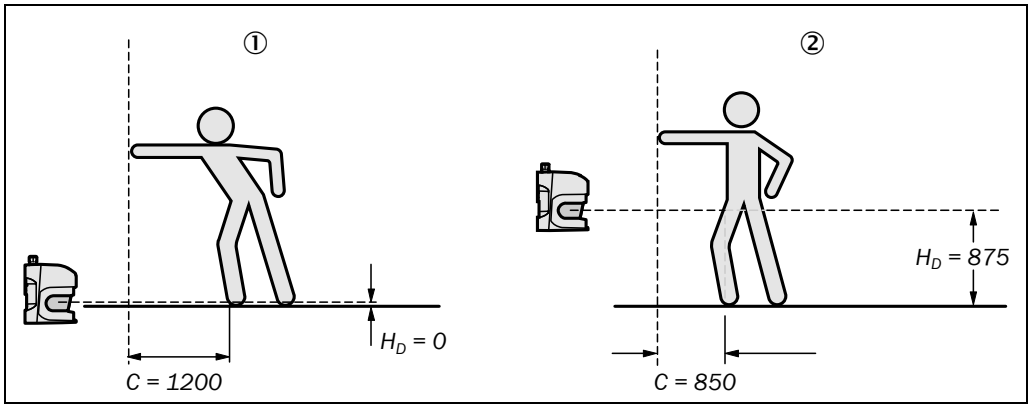

The necessary supplement for the minimum distance is dependent on the height of the scan plane for the protective field. At low heights ① the supplement is larger than at greater heights ②.

WARNING

Prevent the possibility of crawling beneath the protective device if you mount it higher than 300 mm!

Prevent personnel from being able to crawl beneath the protective field by means of appropriate mounting of the S3000. If you mount the protective device higher than 300 mm, you must prevent crawling beneath by means of additional measures. For applications that are accessible to the public, the mounting height may need to be reduced to 200 mm (on this subject see the appropriate regulations).

© SICK AG • Industrial Safety Systems • Germany • All rights reserved

How to calculate the supplement C:

- If there is enough empty space in front of your machine or system, use 1200 mm for the supplement C.
- If the minimum distance is to be kept as small as possible, calculate C using the following formula:
  $C = 1200\ mm - (0.4 \times H_D)$
  Here H_D is the height at which the protective field is mounted.

Note The minimum supplement to prevent reaching over is 850 mm (arm length).

In summary there are three usual mounting variants for the scan plane of the S3000. The optimal variation depends on the related application.

Fig. 33: Mounting variations for the scan plane

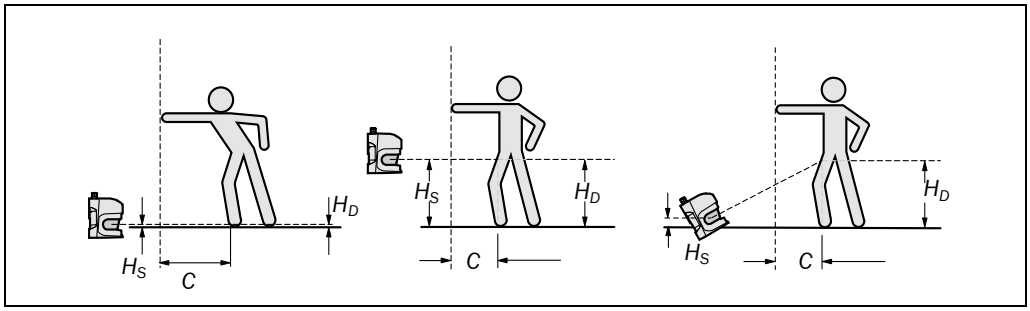

Tab. 20 provides assistance making the selection.

Tab. 20: Advantages and disadvantages of mounting variations
H_D = Detection height
H_S = Scanner mounting height

Mounting orientation	Benefit	Disadvantage
Scanner low (H_S < 300 mm) Low inclination of the scan plane ($H_D \approx H_S$)	No external effects due to dazzle, crawling beneath not possible	Larger supplement C
Scanner high (H_S > 300 mm) Low inclination of the scan plane ($H_D \approx H_S$)	Lower protective field supplement C	Danger of crawling beneath (at the front and side)
Scanner low (H_S < 300 mm) High inclination of the scan plane ($H_D > H_S$)	Lower protective field supplement C	Danger of crawling beneath (at the front), external effect due to dazzle possible

© SICK AG • Industrial Safety Systems • Germany • All rights reserved

Height of the scan plane at 70 mm resolution

Due to the radial sampling of the protective field, the optical resolution will be lower the further away you get from the safety laser scanner.

Fig. 34: Relationship between resolution and protective field mounting height

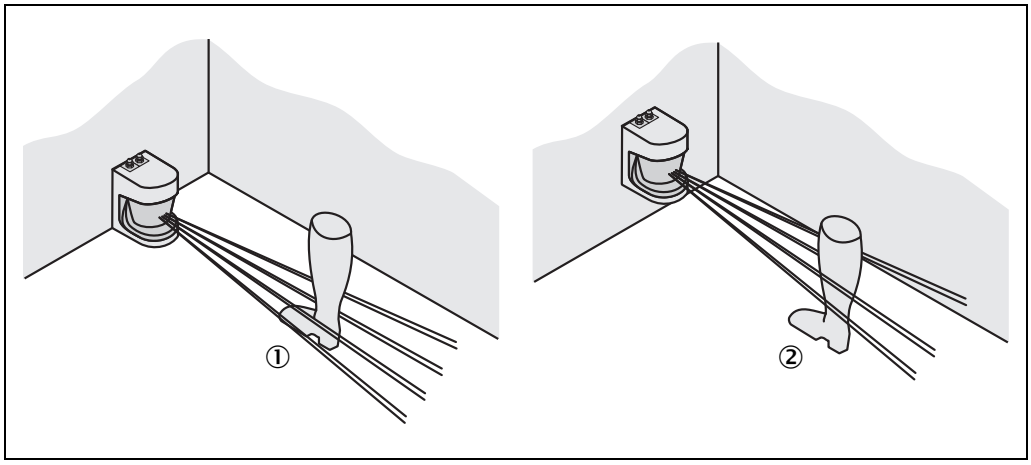

If you choose a resolution of 70 mm in the CDS for hazardous area protection, a human leg may, in certain circumstances, not be detected. The reason in this case would be that the beams miss the ankle on the left and right ①.

If you mount the S3000 higher, the scan plane is at fibula height and the leg is also detected with an object resolution of 70 mm ②.

WARNING

Prevent the possibility of crawling beneath the protective device if you mount it higher than 300 mm!

Prevent personnel from being able to crawl beneath the protective field by means of appropriate mounting of the S3000. If you mount the protective device higher than 300 mm, you must prevent crawling beneath by means of additional measures. For applications that are accessible to the public, the mounting height may need to be reduced to 200 mm (on this subject see the appropriate regulations).

5.2 Stationary vertical operation for access protection

Access protection can be used when the access to the machine can be defined by physical means. For access protection the S3000 detects the entry of an entire body.

Notes

- To ensure adequate access protection, a response time of ≤ 90 ms and a resolution of 150 mm or finer are required.
- To protect the protective device against inadvertent adjustment or manipulation, you must use the contour of the surroundings as a reference for the S3000 (see section 4.9.3 “Using the contour as a reference” on page 55).

© SICK AG • Industrial Safety Systems • Germany • All rights reserved

5.2.1 Minimum distance

For access protection, a minimum distance (S) must be maintained between protective field and hazardous area. This safety distance ensures that the hazardous point can only be reached after the dangerous state of the machine has been completely stopped.

Fig. 35: Access protection

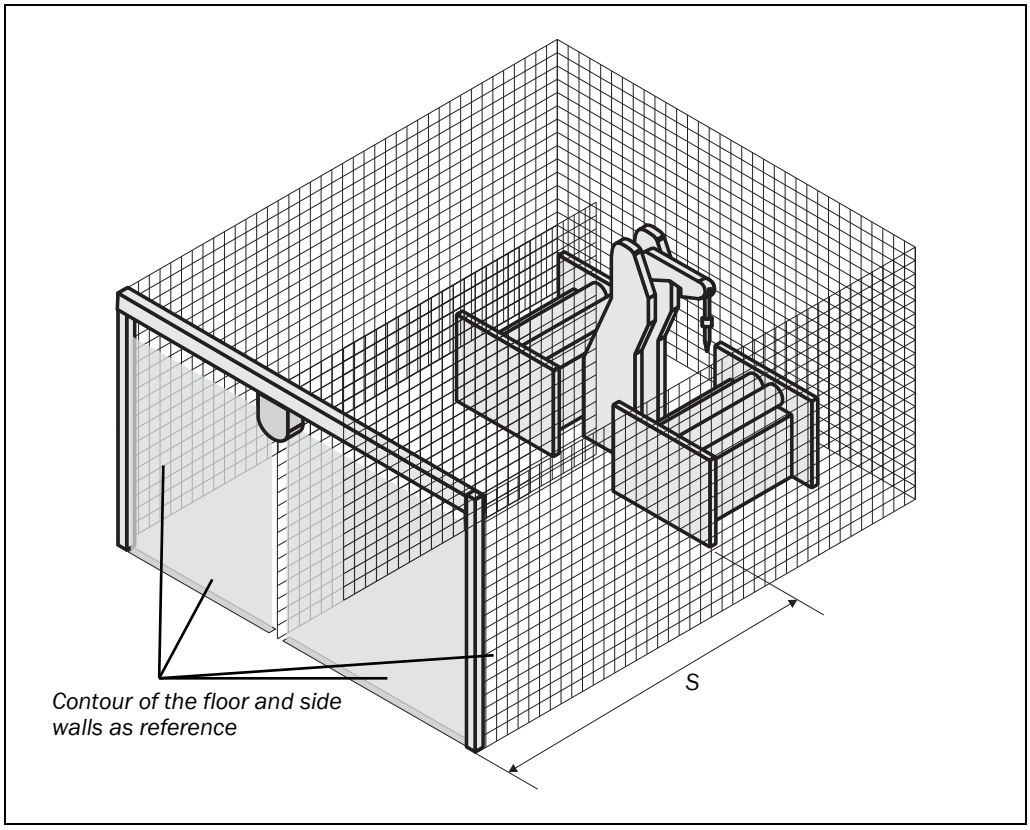

The minimum distance S as defined in EN ISO 13 855 and EN ISO 13 857 depends on:

- reach or approach speed
- stopping/run-down time of the machine or system
  (the stopping/run-down time is shown in the machine documentation or must be determined by taking a measurement. — On request SICK service can perform a stoptime measurement on your system.)
- response time of the S3000
- supplement C against reaching through

How to calculate the minimum distance S (see EN ISO 13 855):

➢ First, calculate S using the following formula:

$S = (K \times (T_M + T_S)) + C$

Where ...

K = Approach speed (1600 mm/s, defined in EN ISO 13 855)
T_M = Stopping/run-down time of the machine or system
T_S = Response time of the S3000
C = Supplement against reaching through (850 mm)

© SICK AG • Industrial Safety Systems • Germany • All rights reserved

Response time T_S of the S3000

WARNING

The total response time of the S3000 must not be more than 90 ms for access protection!

If a critical response time is exceeded (for an object diameter of 150 mm and a speed of 1.6 m/s that is 90 ms) a person may no longer be detected under certain circumstances. The critical response time is exceeded if the basic response time is too high, possibly due to multiple sampling or due to the usage of external OSSDs.

In specific cases agreed with the responsible authorities higher response times may be allowed (for example by increasing the detection time available by positioning the scanner at an angle). In this case ensure that the areas the safety laser scanner cannot see are protected by additional measures.

The response time T_S of the S3000 depends on ...

- the resolution used.
- the multiple sampling set.
- the transmission speed to external OSSDs over EFI.

See section 12.2 “OSSD response times” on page 144.

5.3 Stationary vertical operation for hazardous point protection

Hazardous point protection is necessary if the operator must remain near the dangerous state of the machine. Hand protection is required for hazardous point protection.

Notes

- To provide hand protection with hazardous point protection a resolution of at least 40 mm is required. The S3000 provides a maximum resolution of 30 mm.

WARNING

Never use the S3000 for applications in which finger protection is required!

Due to the maximum resolution of 30 mm, the S3000 is not suitable for finger protection.

- To protect the protective device against inadvertent adjustment or manipulation, you must use the contour of the surroundings as a reference for the S3000 (see section 4.9.3 “Using the contour as a reference” on page 55).

© SICK AG • Industrial Safety Systems • Germany • All rights reserved

5.3.1 Minimum distance

For hazardous point protection, a minimum distance must be observed between protective field and hazardous point. This safety distance ensures that the hazardous point can only be reached after the dangerous state of the machine has been completely stopped.

You can operate the S3000 with 30 mm or 40 mm resolution for hazardous point protection. At each resolution you can choose a response time between 60 ms and 120 ms (due to the proximity of the hazardous point in the majority of cases only the shorter response time can be used). The maximum protective field range and the minimum distance to the hazardous point is given by the resolution and the response time.

- If you choose 30 mm resolution, the protective field that can be configured is smaller (for smaller hazardous points to be protected), however you can mount the S3000 nearer to the hazardous point.
- If you choose 40 mm resolution, the protective field that can be configured is larger (thus for larger hazardous points to be protected), however you must mount the S3000 further away from the hazardous point.

WARNING

Danger due reaching around or reaching behind!

Always mount the safety laser scanner such that reaching around and behind is impossible. Provide suitable additional precautions as necessary.

Fig. 36: Minimum distance to the hazardous area

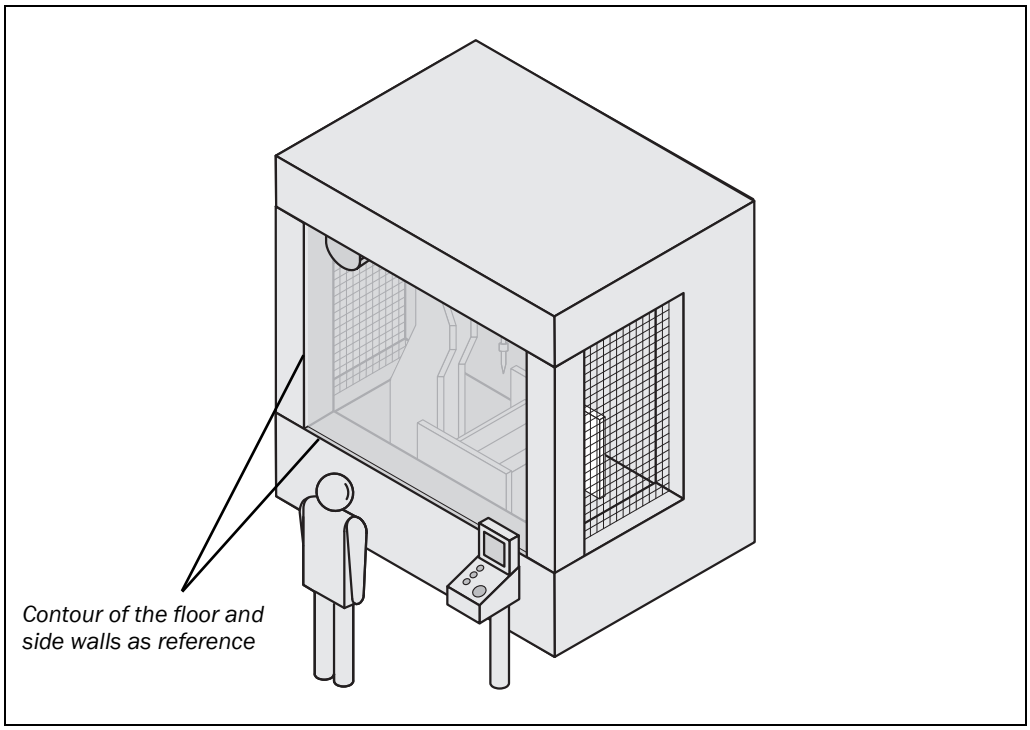

The minimum distance as defined in EN ISO 13 855 and EN ISO 13 857 depends on:

- stopping/run-down time of the machine or system
  (the stopping/run-down time is shown in the machine documentation or must be determined by taking a measurement.)
- response time of the S3000
- reach or approach speed
- resolution of the S3000

© SICK AG • Industrial Safety Systems • Germany • All rights reserved

How to calculate the minimum distance S (see EN ISO 13 855):

➢ First, calculate S using the following formula:

$S = 2000 \times (T_M + T_S) + 8 \times (d - 14)$ [mm]

Where ...

S = Minimum distance [mm]
T_M = Stopping/run-down time of the machine or system
T_S = Response time of the S3000
d = Resolution of the S3000 [mm]

Note The reach/approach speed is already included in the formula.

➢ If the result S is ≤ 500 mm, then use the determined value as the minimum distance.

➢ If the result S is > 500 mm, you may be able to reduce the minimum distance using the following calculation:

$S = 1600 \times (T_M + T_S) + 8 \times (d - 14)$ [mm]

➢ If the new value S is > 500 mm, then use the newly calculated value as the minimum distance.

➢ If the new value S is ≤ 500 mm, then use 500 mm as the minimum distance.

Response time of the S3000

The response time T_S of the S3000 depends on ...

- the resolution used.
- the multiple sampling set.
- the transmission speed to external OSSDs over EFI.

See section 12.2 “OSSD response times” on page 144.

© SICK AG • Industrial Safety Systems • Germany • All rights reserved

5.4 Mobile applications

If the dangerous state is produced by a vehicle (e.g. AGV or fork lift), the hazardous area that is produced by the movement of the vehicle is protected by the S3000.

Notes

- The S3000 may only be used to protect vehicles powered by electric motor.
- Due to the movement of the S3000 itself in a mobile application, a resolution of 70 mm is sufficient for the detection of people.
- In the following calculations only take into account the velocity of the vehicle, not the speed of the person walking. This is based on the assumption that the person will recognize the danger and stand still.
- If the application is to protect vehicles from collisions, then you may need to use different assumptions. These are very specific and can therefore not be described here. Contact the relevant authorities and clarify the assumptions that must be taken into account with regard to your application.

For a horizontally mounted mobile application, determine:

- protective field length
- protective field width
- height of the scan plane
- restart behavior
- methods of preventing unprotected areas

5.4.1 Protective field length

You must configure the protective field such that a minimum distance to the vehicle is maintained. This ensures that a vehicle monitored by the S3000 comes to a stop before a person or object is reached.

Note If you define several monitoring cases with different protective fields, particularly if you switch between monitoring cases dependent on velocity, you must calculate the protective field lengths for all protective fields used.

How to calculate the protective field length S_L (see EN ISO 13 855):

➢ Calculate the necessary protective field length using the formula:

$S_L = S_A + Z_G + Z_R + Z_F + Z_B$

Where ...

S_A = Stopping distance
Z_G = General safety supplement = 100 mm
Z_R = Supplement for any reflection related measurement error of the S3000
Z_F = Supplement for any lack of ground clearance of the vehicle
Z_B = Supplement for the reduction in the braking performance of the vehicle as defined in the related vehicle documentation

© SICK AG • Industrial Safety Systems • Germany • All rights reserved

Stopping distance

The stopping distance comprises the braking distance for the vehicle, the distance covered during the response time of the safety laser scanner and the response time of the vehicle controller.

Fig. 37: Stopping distance

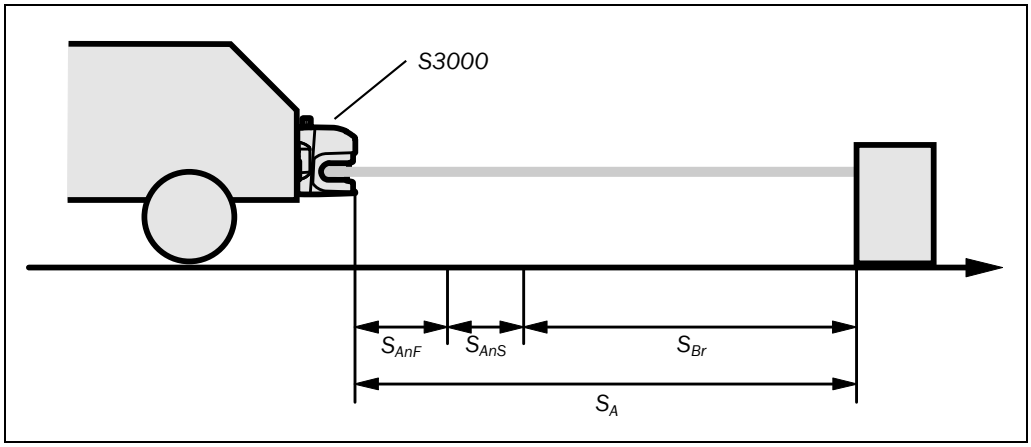

Note Take into account that the braking distance for a vehicle is not linear with increasing velocity, but increases in a square function. This is particularly important if you switch the protective field length as a function of the velocity using incremental encoders.

Fig. 38: Braking distance as a function of the vehicle velocity

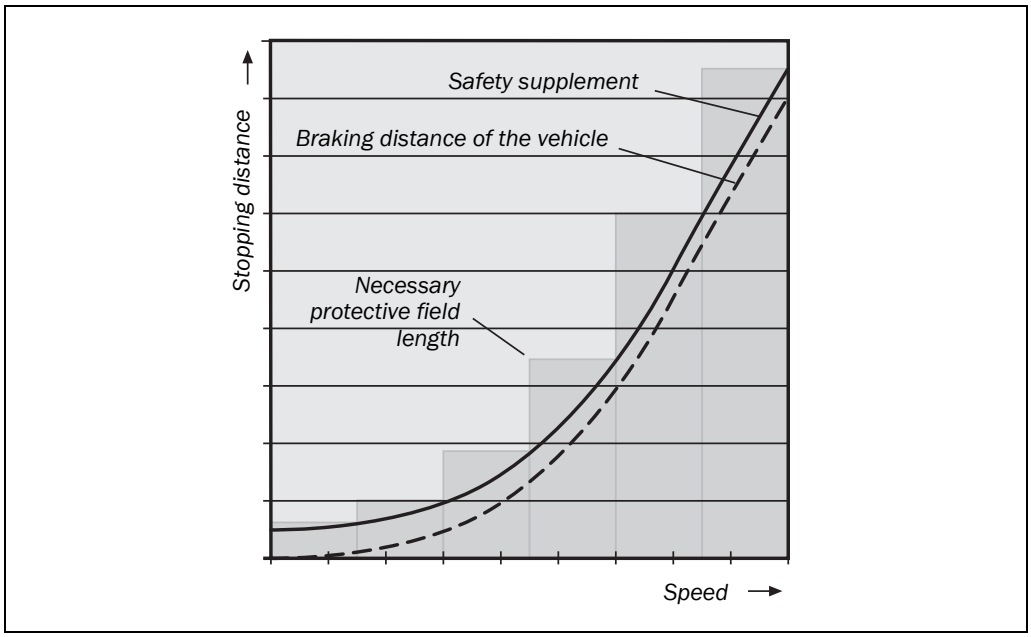

How to calculate the stopping distance:

➢ Calculate the stopping distance using the formula:

$S_A = S_{Br} + S_{AnF} + S_{AnS}$

Where ...

S_{Br} = Braking distance from the vehicle documentation

S_{AnF} = Distance covered during the response time of the vehicle controller from the vehicle documentation

S_{AnS} = Distance covered during the response time of the safety laser scanner

© SICK AG • Industrial Safety Systems • Germany • All rights reserved

Distance covered during the response time of the safety laser scanner

The distance covered during the response time of the safety laser scanner depends on ...

- the response time of the safety laser scanner,
- the maximum velocity of the vehicle in your mobile application.

The response time T_S of the S3000 depends on ...

- the multiple sampling set,
- the transmission speed to external OSSDs over EFI.

See section 12.2 “OSSD response times” on page 144.

How to calculate the distance covered during the response time of the safety laser scanner:

➢ Calculate the distance using the formula:

$S_{AnS} = T_S \times V_{max}$

Where ...

T_S = Response time of the safety laser scanner

V_{max} = Maximum velocity of the vehicle from the related vehicle documentation

Supplement Z_R for measurement errors caused by reflection

With retroreflectors in the background at a distance of less than 1 m from the boundary of the protective field, the supplement Z_R is 200 mm.

© SICK AG • Industrial Safety Systems • Germany • All rights reserved

Supplement Z_F due to lack of ground clearance

This supplement is necessary because a person is generally detected above the foot and the braking action can therefore not take into account the length of the foot in front of the detection point. If a vehicle has no ground clearance, a person may receive foot injuries.

Fig. 39: Supplement due to lack of ground clearance

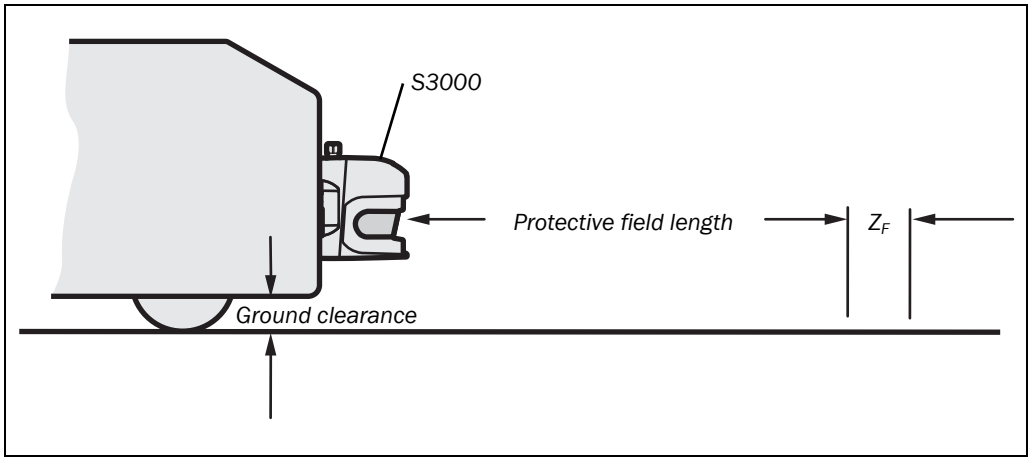

➢ The flat rate supplement for ground clearance below 120 mm is 150 mm. This supplement can be further reduced in specific cases. For this purpose read off the actual supplement necessary for the ground clearance of your vehicle from the diagram below:

Fig. 40: Diagram of ground clearance of the vehicle

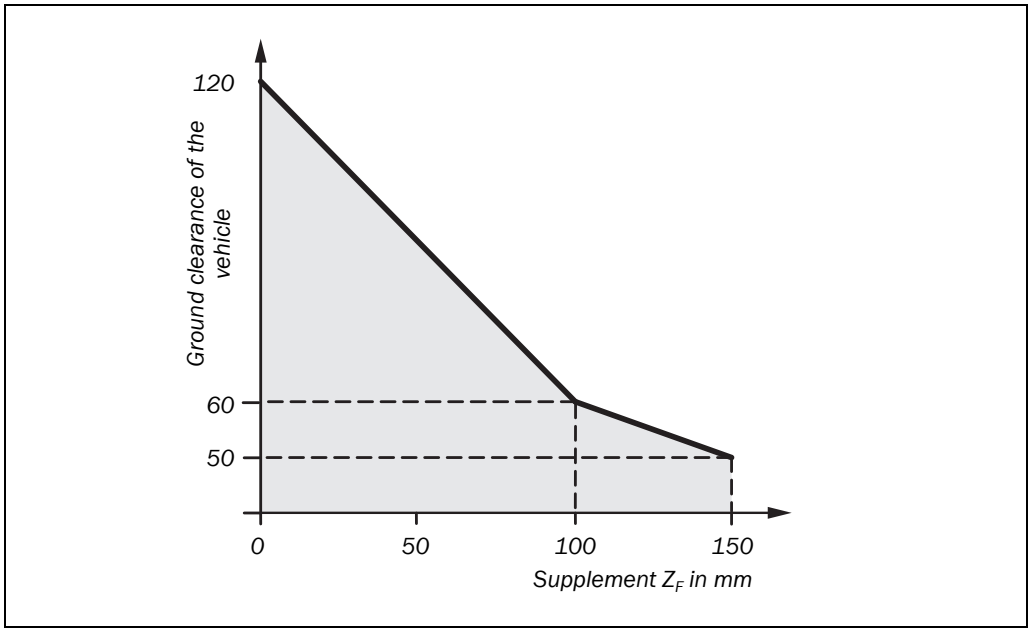

© SICK AG • Industrial Safety Systems • Germany • All rights reserved

5.4.2 Protective field width

The width of the protective field must cover the width of the vehicle and the supplements for the measurement error and the lack of ground clearance.

How to calculate the protective field width S_B (see EN ISO 13 855):

➢ Calculate the protective field width S_B using the formula:

$S_B = F_B + 2 \times (Z_G + Z_R + Z_F)$

Where ...

F_B = Vehicle width

Z_G = General safety supplement = 100 mm

Z_R = Supplement for any reflection related measurement error of the S3000

Z_F = Supplement for any lack of ground clearance of the vehicle

Fig. 41: Protective field width

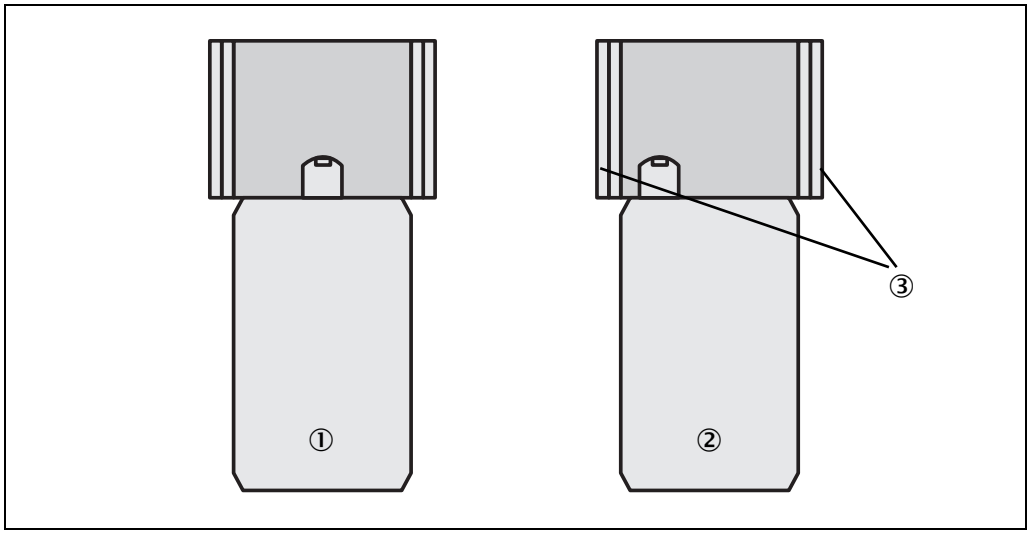

Note As a rule you will mount the S3000 in the middle of the vehicle ①. If this is not the case, then you must define the protective field asymmetrically ②. (The CDS represents the fields are they appear in the plan view of the safety laser scanner.) Ensure that there are supplements on the right and left of the vehicle ③.

5.4.3 Height of the scan plane

WARNING

Mount the S3000 such that the scan plane is at a maximum height of 200 mm!

In this way persons lying down will be reliably detected. Tilting the protective field so that objects with a diameter of 200 mm are not detected, is not allowed. We recommend aligning the scan plane at 150 mm.

Fig. 42: Mounting height

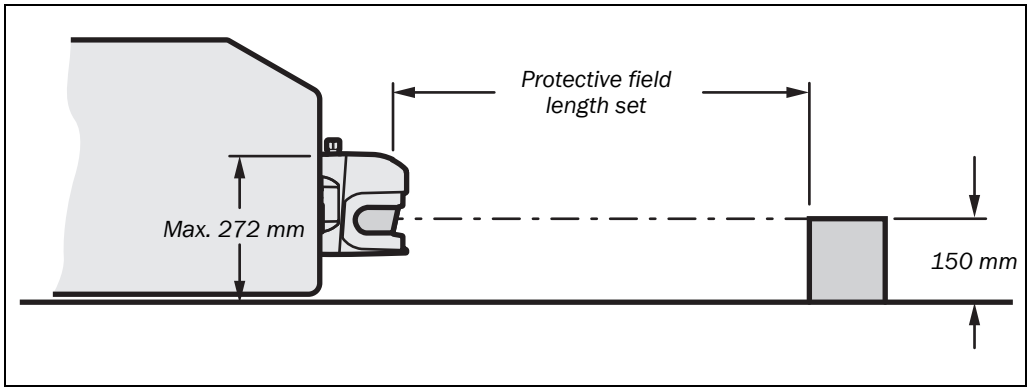

© SICK AG • Industrial Safety Systems • Germany • All rights reserved

5.4.4 Methods of preventing unprotected areas

When the S3000 is mounted on a plane surface, there are areas in front of the mounting surface that are not covered by the safety laser scanner ①.

Fig. 43: Unprotected areas for mobile applications

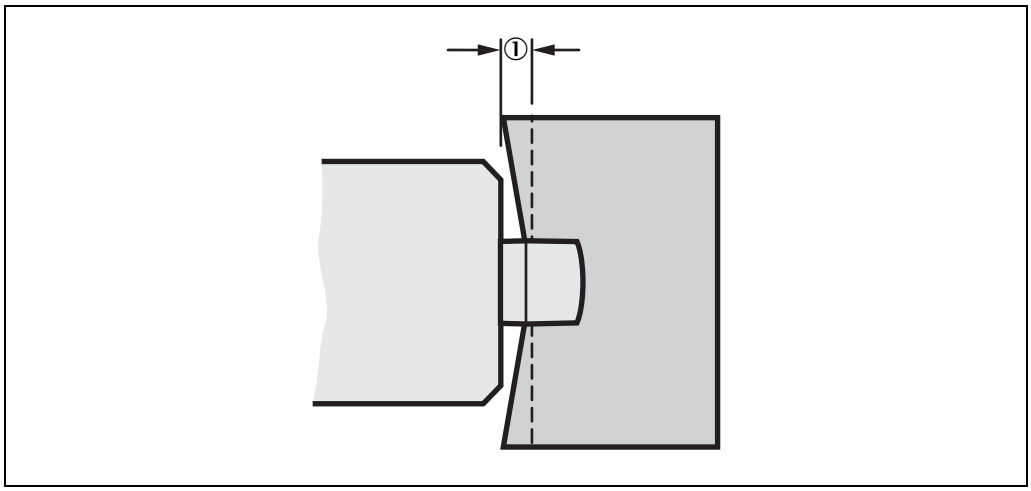

These unprotected areas ① become larger if you mount the S3000 using mounting kits.

Tab. 21: Unprotected areas

Mounting variant	Size of the unprotected areas
Direct mounting	109 mm
With mounting kit 1	112 mm
With mounting kit 1 and 2	127 mm
With mounting kit 1, 2 and 3	142 mm

WARNING

Secure any unsecured areas!

Areas not visible to safety laser scanners must be secured using appropriate measures, such as mechanical casings, switch rails or bumpers. Bumpers must be designed in such a way that they still trigger quickly enough at maximum acceleration.

Ensure the protective field selected is large enough!

When starting very quickly from standstill, the protective field selected needs to be large enough to suffice even at maximum acceleration.

© SICK AG • Industrial Safety Systems • Germany • All rights reserved

Fitting in the vehicle trim

Build the S3000 into the vehicle trim at least such that the unprotected areas are ≤ 70 mm and the S3000 projects a maximum of 109 mm beyond the front of the vehicle. The vehicle may then be accelerated to a velocity of 0.3 m/s within a second.

Fig. 44: Fitting the S3000 in the vehicle trim

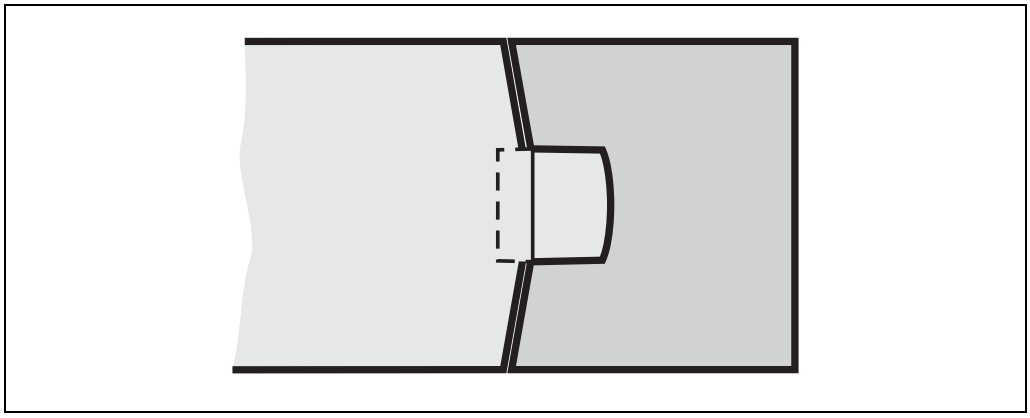

Additionally protect the area near to the scanner (5 cm wide area in front of the front screen) using a proximity switch with an acquisition range of 5 cm. Or make the area near the scanner impassable with a bar or a recess. The vehicle may then be accelerated as required.

Note Note that the system must be fitted e.g. in a trim panel without impairing the optical beam path. The attachment of an additional front screen is thus not allowed. Any slot for the field of view must be adequately sized (see Fig. 101 in section 12.6 “Dimensional drawings” on page 159).

Recommendation If, when observing all necessary safety precautions, you are able to avoid the use of a restart interlock, you will increase the availability of your system.

© SICK AG • Industrial Safety Systems • Germany • All rights reserved

5.5 Measures to protect areas not covered by the S3000

During mounting the S3000, areas may be found that are not covered by the safety laser scanner.

Fig. 45: Unprotected areas for stationary applications

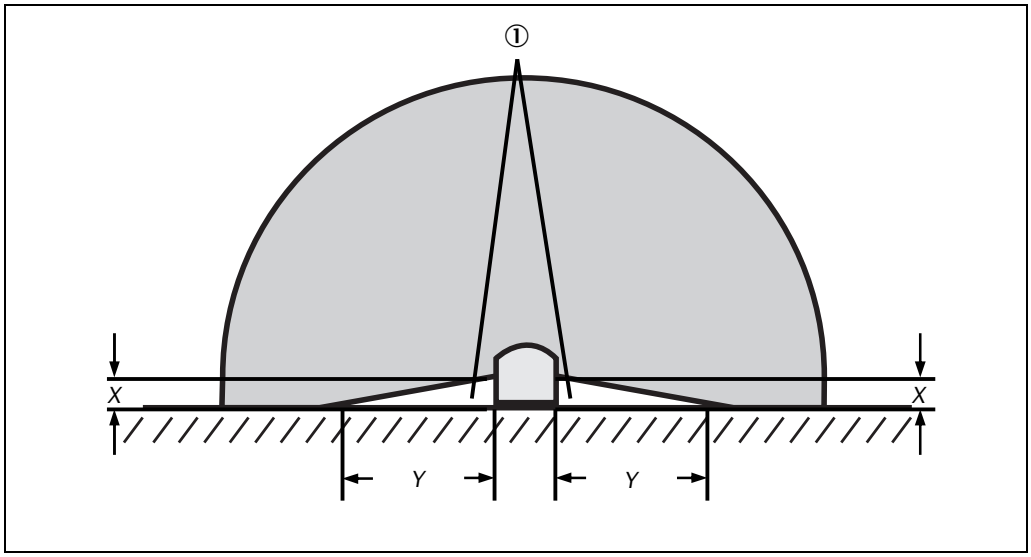

These areas ① become larger if the S3000 is mounted using the mounting kits.

Tab. 22: Size of the unprotected areas

Mounting variant	Size of the unprotected areas	
	X	Y
Direct mounting	109 mm	1245 mm
With mounting kit 1	112 mm	1280 mm
With mounting kit 1 and 2	127 mm	1452 mm
With mounting kit 1, 2 and 3	142 mm	1623 mm

WARNING

Prevent unprotected areas!

Mount the S3000 such that there are no unprotected areas. Take one of the precautions given in the following:

- Fit cover plates to prevent standing behind.
- Fit the S3000 in a recess.

© SICK AG • Industrial Safety Systems • Germany • All rights reserved

Mounting with cover plates

Fig. 46: Example of mounting with cover plates

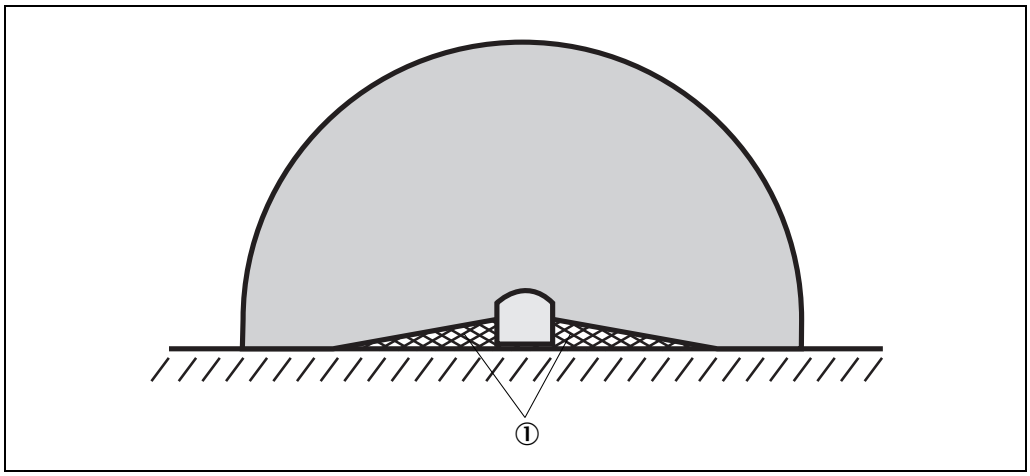

➢ Fit the cover plates such ① that the areas not protected by the safety laser scanner are completely protected against standing behind.

Mounting in a recess

Fig. 47: Form of the recess

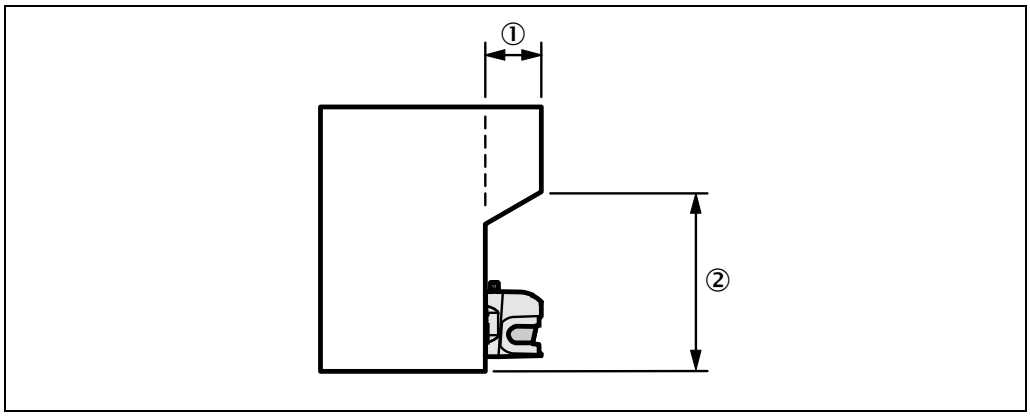

➢ Design the recess ① to be at least sufficiently deep that it completely covers the hazardous area not protected by the safety laser scanner (Fig. 46) and such that standing behind is impossible.

Important

➢ Prevent crawling beneath the recess by limiting the height of the recess ② such that nobody can crawl beneath.

© SICK AG • Industrial Safety Systems • Germany • All rights reserved

5.6 Time for monitoring case switching

If you switch between several monitoring cases, along with the minimum distance to the dangerous state there is a further safety relevant aspect that you must address.

WARNING

Set the timing for the switching such that the S3000 already detects a person in the protective field with an adequate minimum distance before the dangerous state occurs!

Note that at the time of the switching there may be a person in the protective field. Only by means of switching in the correct time frame (i.e. before the hazard occurs at this point for the person) is protection provided.

If you switch the controller within 10 or 20 ms, the protective field selected is available within the basic response time of the S3000. For this reason you can initiate the switching at the time at which you actually want to switch from one monitoring case to the other.

However, you must advance the timing of the switching if you ...

- have entered an input delay for your switching method (see section “Input delay” on page 44).
- use external inputs (e.g. the inputs on another S3000).
- control external OSSDs instead of the internal OSSDs (e.g. the OSSDs on another S3000) via EFI.

The following diagram shows the relationships:

Fig. 48: Advancement for the switch timing

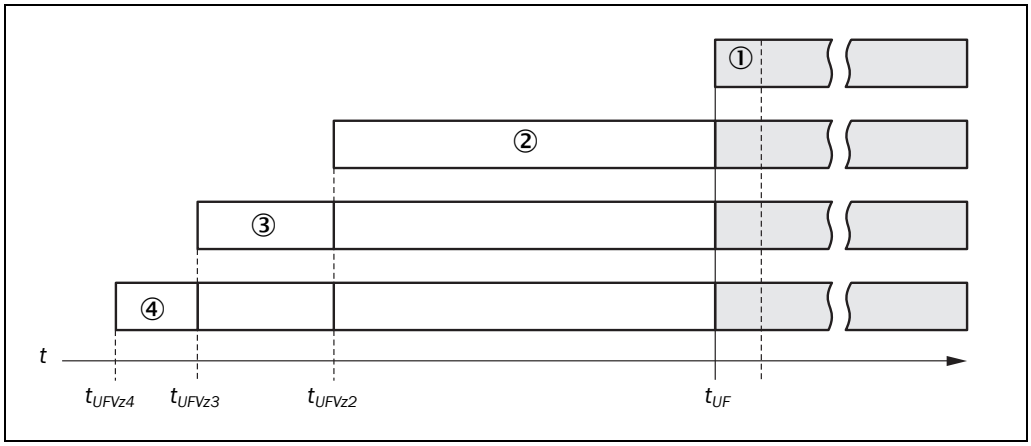

- If the input conditions are present at the control inputs within 10 or 20 ms (cf. ①), the timing for the switching (t_{UF}) does not need to be advanced.
- If an input delay for the control inputs needs to be taken into account (cf. ②), the timing for the switching (t_{UFVz2}) must be advanced by the input delay.
- If the inputs on a different device are used via EFI, the timing for the switching (t_{UFVz3}) must be further advanced by 0.5 times the basic response time of the slowest system in the EFI system (cf. ③).
- If external OSSDs are used, the timing for the switching (t_{UFVz4}) must be further advanced by 20 ms (cf. ④).

Notes

- In the phases before and after the switching, the minimum distances calculated for the individual monitoring cases apply on their own.
- The considerations above serve only for the selection of the optimal timing of the switching.

© SICK AG • Industrial Safety Systems • Germany • All rights reserved

- If the timing for the switching cannot be exactly defined, e.g. due to the variable processing speed of the machine, or advancing the switch timing results in premature termination of the monitoring of the initial area, you must ...
  - allow the two protective fields to partially overlap.
  - have both hazardous areas monitored temporarily using simultaneous monitoring.

The following figure shows an example for a gantry robot that is protected using two monitoring cases.

Fig. 49: Example of advancing the timing for the switching

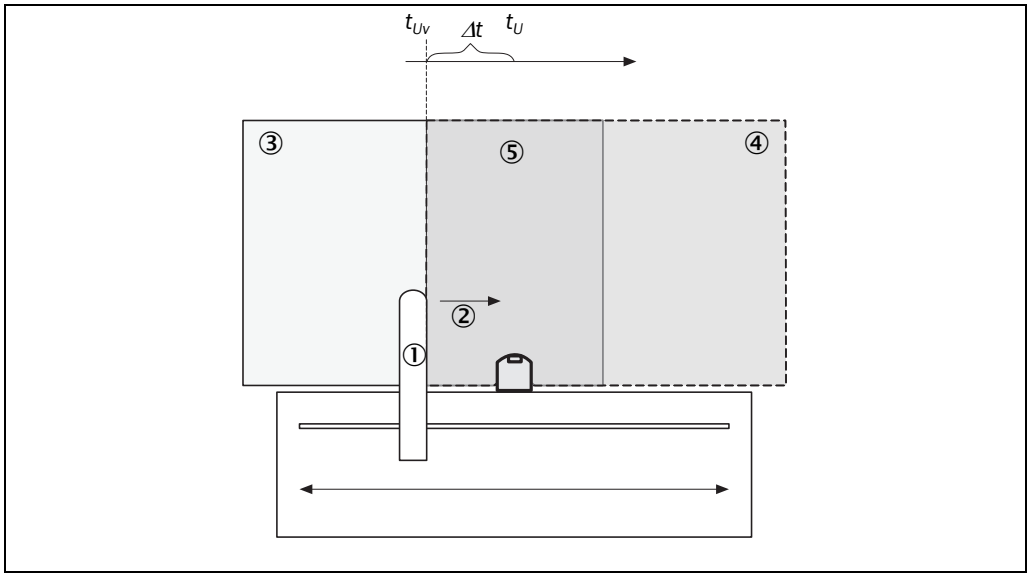

The gantry robot ① moves to the right ②. On the left hand side the dangerous movement is monitored by a monitoring case ③. When the gantry robot arrives at the point t_{Uv}, switching must have already been performed due to the advancing of the switching necessary so that at time t_U the right monitoring case ④ is active.

Notes

- For the movement to the left, that is for the switching to the monitoring case ③, the same applies.
- The protective fields for the monitoring cases must overlap here ⑤, so that a protective function is always provided.

How far you must advance the timing for the switching depends on ...

- the input delay required for the used switching method to provide the input condition for case switching (see section “Input delay” on page 44).
- whether you use external OSSDs via EFI.
- whether you use external control inputs (e.g. on another S3000).

How to calculate the timing for the switching:

➢ Calculate the timing for the switching using the following formula:

$t_{UFVz} = t_{EVz} + t_{exOVz} + t_{StVz}$

Where ...

t_{UFVz} = Timing advance for the switching

t_{EVz} = Input delay for the control inputs

t_{exOVz} = Delay due to external OSSDs over EFI = 20 ms

t_{StVz} = Delay due to external control inputs over EFI (0.5 × basic response time of the slowest system in the EFI system)

© SICK AG • Industrial Safety Systems • Germany • All rights reserved

5.7 Mounting steps

WARNING

Special features to note during mounting:

- Mount the S3000 such that it is protected from moisture, dirt and damage.
- Ensure that the entire field of view of the S3000 is not restricted.
- Mount the safety laser scanner such that the indicators are easy to see.
- Always mount the S3000 such that you can plug in and remove the system plug.
- Avoid excessive shock and vibration loading on the safety laser scanner.
- On systems that suffer from heavy vibration, prevent the fixing screws from coming loose using screw locking devices.
- Regularly check the tightness of the fixing screws.
- Prevent personnel from being able to crawl beneath, stand behind or climb over the protective field by means of appropriate mounting of the S3000.

Fig. 50: Prevent crawling beneath, standing behind, climbing over

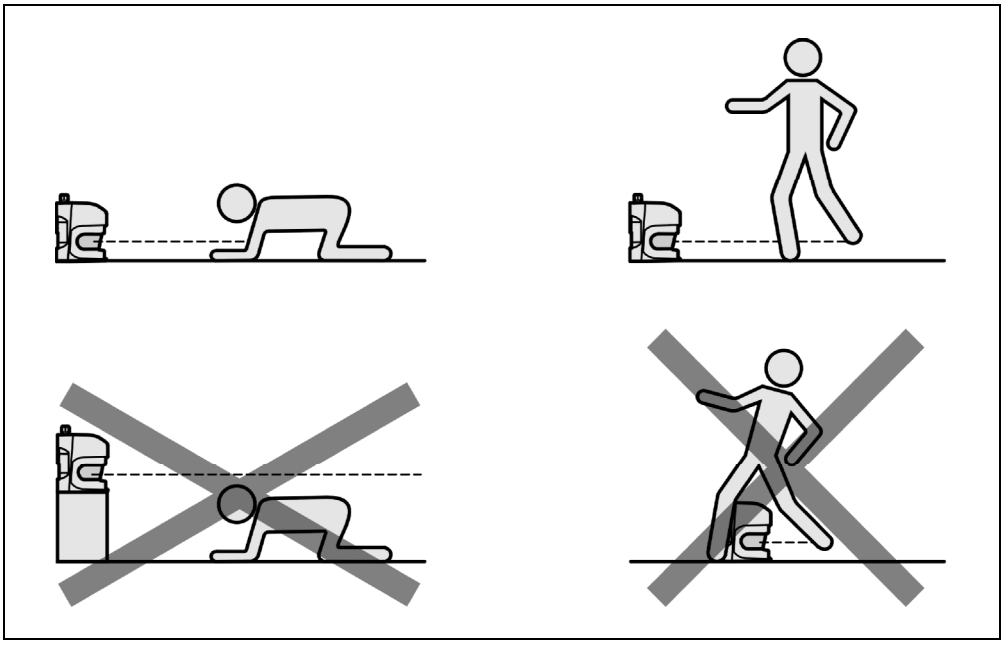

The origin of the scan plane is 63 mm above the bottom edge of the S3000. If you mount the S3000 using mounting kit 3, then the origin of the scan plane is 102 mm above the bottom edge of mounting kit 3 (see section 12.6.3 “Scan plane origin” on page 161).

There are four possible ways of mounting the S3000:

- direct mounting without mounting kit
- mounting with mounting kit 1
- mounting with mounting kit 1 and 2
- mounting with mounting kit 1, 2, and 3

The mounting kits build one on another. For mounting with mounting kit 2 you will therefore also need mounting kit 1. For mounting with mounting kit 3 you will therefore also need mounting kits 1 and 2. You will find the part numbers for the mounting kits in section 13.3.3 “Mounting kits” on page 163.

© SICK AG • Industrial Safety Systems • Germany • All rights reserved

Note Observe the maximum tightening torque for the fastening screws on the S3000:

- M6 on the rear = max. 12 Nm
- M8 on the side = max. 16 Nm

The orientation in which the safety laser scanner is mounted is not relevant, i.e. you can mount the S3000 both at an angle and upside down.

5.7.1 Direct mounting

The S3000 has four M6 × 8 threaded holes on the rear. Using these holes you can mount the S3000 directly if you can drill through the mounting surface from the rear.

Note The maximal tightening torque for the threaded holes is 12 Nm.

Fig. 51: Threaded holes for direct mounting

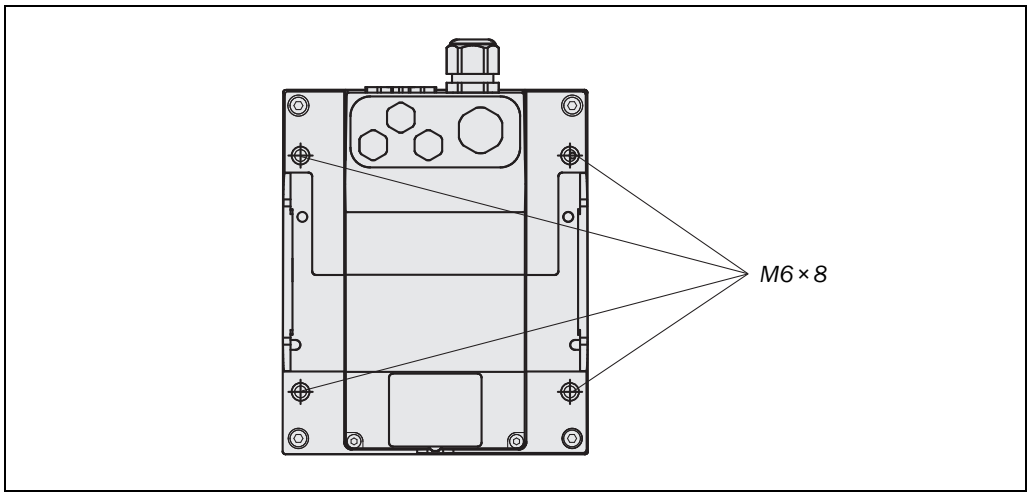

Recommendation Use at least mounting kit 1. In this way the device will be easier to dismount.

5.7.2 Mounting with mounting kit 1

With the aid of mounting kit 1 you can mount the S3000 indirectly on the mounting surface. This is always necessary if you cannot drill through the mounting surface from the rear.

Fig. 52: Mounting with mounting kit 1

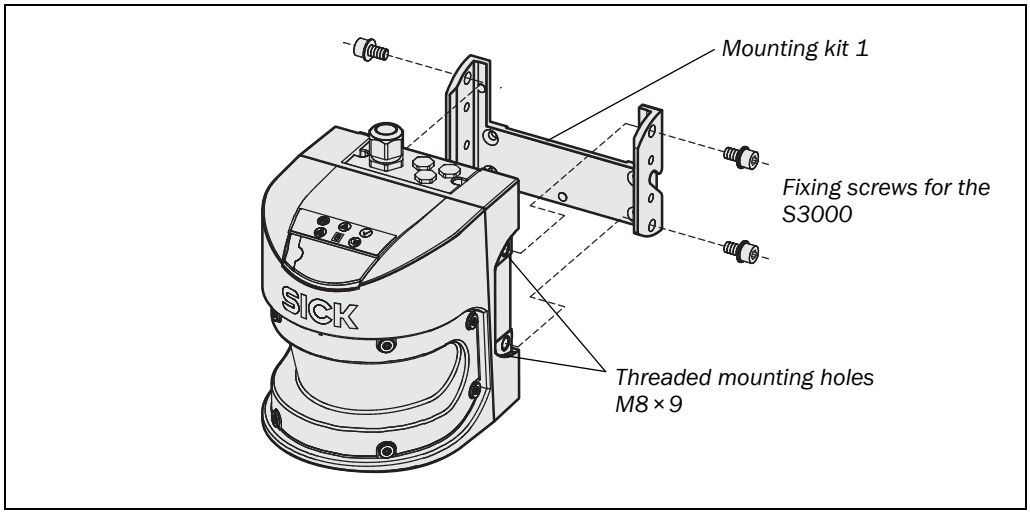

- ➢ Mount the mounting kit 1 on the mounting surface.
- ➢ Then mount the S3000 on mounting kit 1.
- ➢ Pay attention to the maximum tightening torque for the threaded mounting holes M8 × 9 of 16 Nm.

© SICK AG • Industrial Safety Systems • Germany • All rights reserved

5.7.3 Mounting with mounting kit 2

With the aid of mounting kit 2 (only in conjunction with mounting kit 1) you can align the S3000 in two planes. The maximum adjustment angle is ±11° in both planes.

Fig. 53: Mounting with mounting kit 2

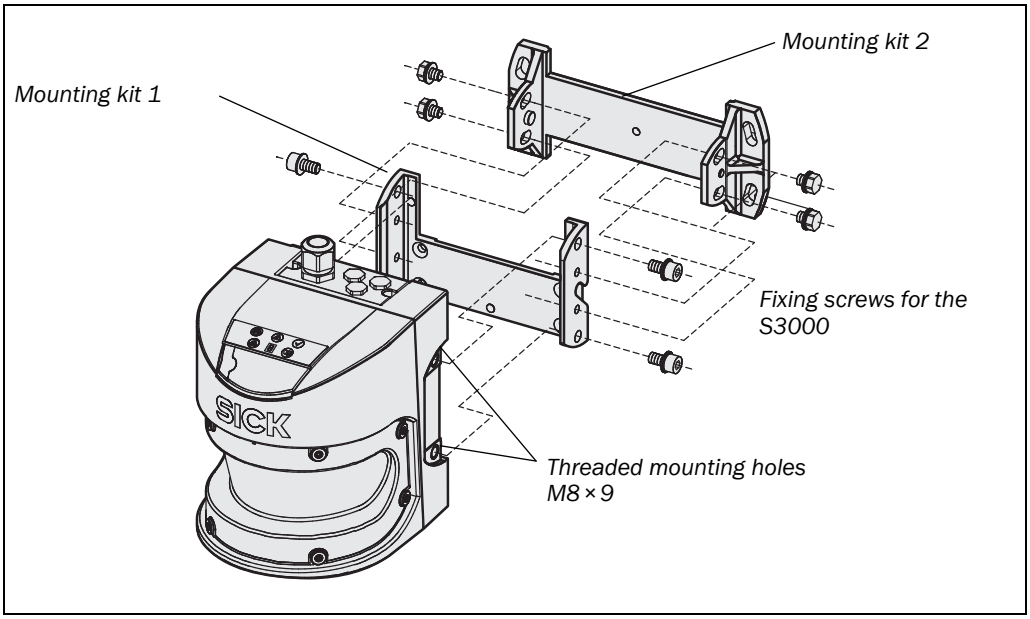

- Mount the mounting kit 2 on the mounting surface.
- Then mount mounting kit 1 on mounting kit 2.
- Then mount the S3000 on mounting kit 1.
- Pay attention to the maximum tightening torque for the threaded mounting holes M8 × 9 of 16 Nm.
- Adjust the S3000 longitudinally and cross-wise.

© SICK AG • Industrial Safety Systems • Germany • All rights reserved

5.7.4 Mounting with mounting kit 3

With the aid of mounting kit 3 (only in conjunction with mounting kits 1 and 2) you can mount the S3000 such that the scan plane is parallel to the mounting surface. This enables e.g. stable floor mounting or ensures that mounting kit 2 remains precisely adjustable cross-wise on uneven wall surfaces.

Fig. 54: Mounting with mounting kit 3

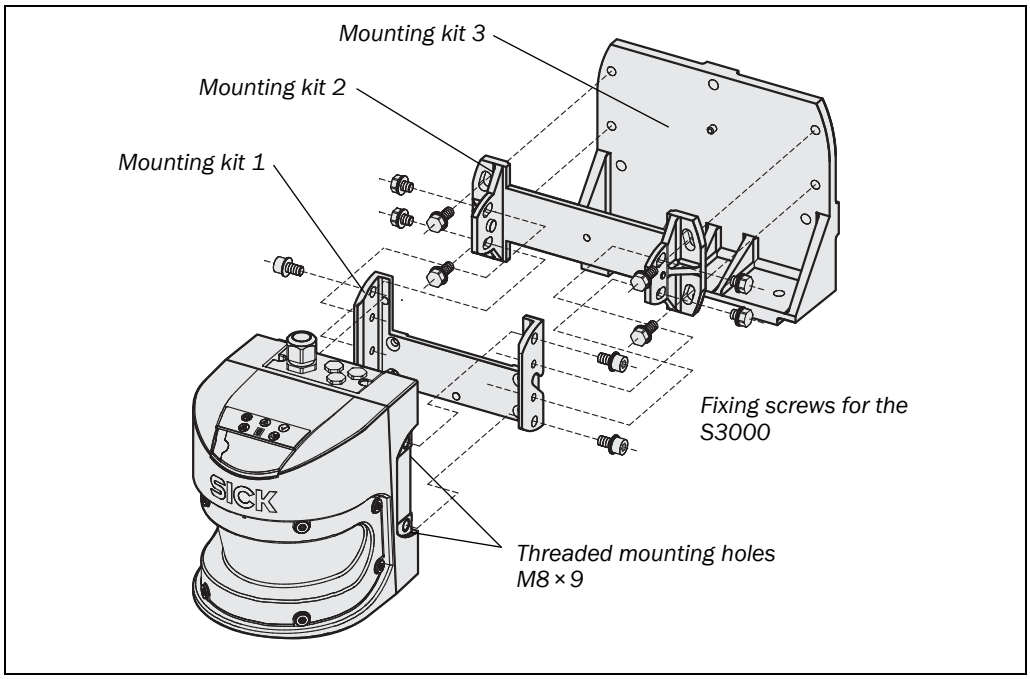

- Mount the mounting kit 3 on the mounting surface.
- Then mount mounting kit 2 on mounting kit 3.
- Then mount mounting kit 1 on mounting kit 2.
- Then mount the S3000 on mounting kit 1.
- Pay attention to the maximum tightening torque for the threaded mounting holes M8 × 9 of 16 Nm.
- Adjust the S3000 longitudinally and cross-wise.

Note During mounting, please observe the dimensional drawings (see section 12.6 “Dimensional drawings” on page 159).

© SICK AG • Industrial Safety Systems • Germany • All rights reserved

5.7.5 Mounting with the Heavy Duty mounting bracket

With the aid of the Heavy Duty mounting bracket you can mount the S3000 such that the scan plane is between 100 mm and 350 mm above the floor. With the aid of the mounting bracket you can align the S3000 in three planes. The maximum adjustment angle is ±5° or ±9°.

Fig. 55: Mounting with the Heavy Duty mounting bracket

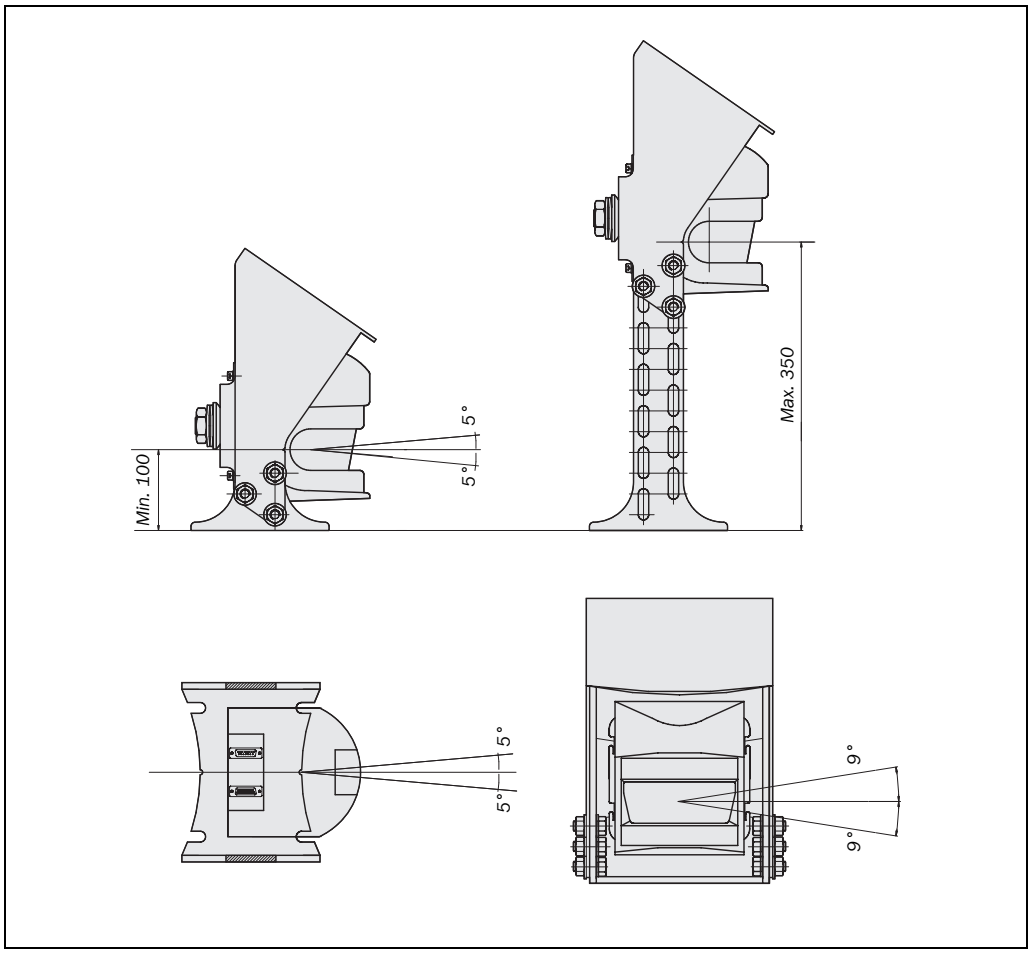

5.7.6 Adhesive label Important information

➢ On completion of mounting, you must affix the self-adhesive information label **Important information** supplied:

- Use only the information label in the language which the operators of the machine understand.
- Affix the information label such that it is clearly visible for all operators during operation. The information label must not be covered even after additional items have been mounted.

5.7.7 Using multiple S3000 safety laser scanners

The S3000 is so designed that mutual interference between several safety laser scanners is unlikely. To completely exclude erroneous switching, you must mount the safety laser scanners as shown in the following examples.

Note In any circumstance observe EN ISO 13855.

Use mounting kits 1 to 3 to adjust the safety laser scanners to different angles (see section 13.3.3 “Mounting kits” on page 163). The beam path for the safety laser scanners can be checked using the Scanfinder LS70b (part no. 6020756).

© SICK AG • Industrial Safety Systems • Germany • All rights reserved

Fig. 56: Opposite mounting

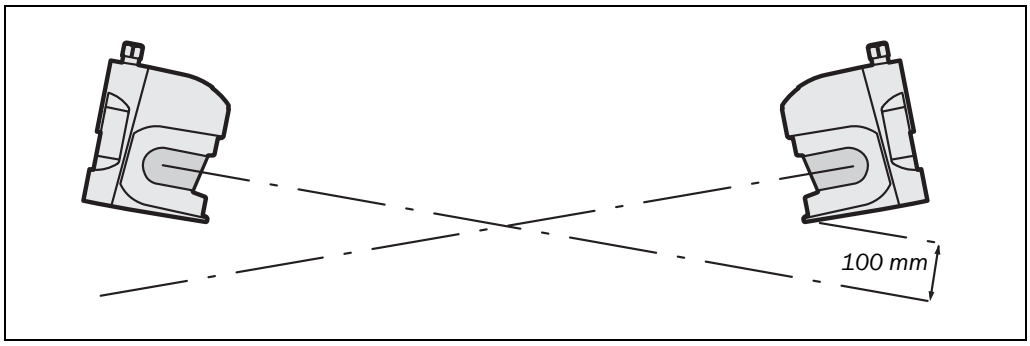

Fig. 57: Inclined, parallel mounting

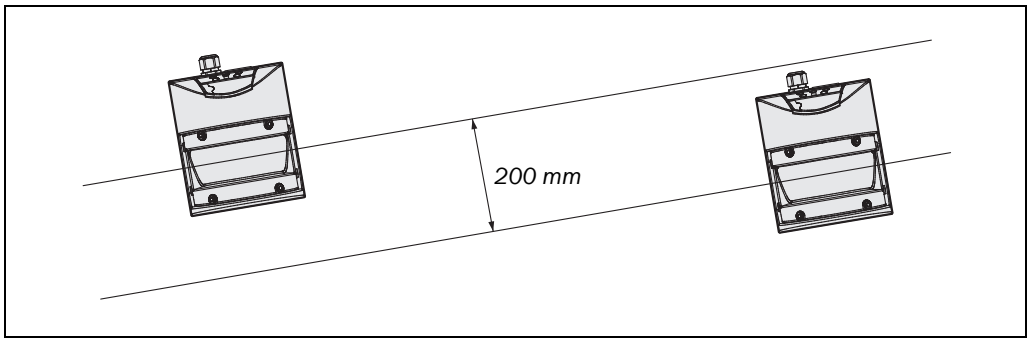

Fig. 58: Offset parallel mounting

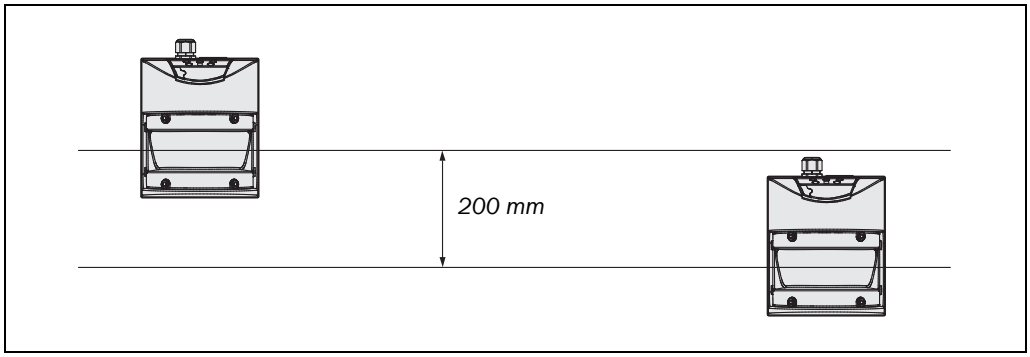

Fig. 59: Mounting on a cross

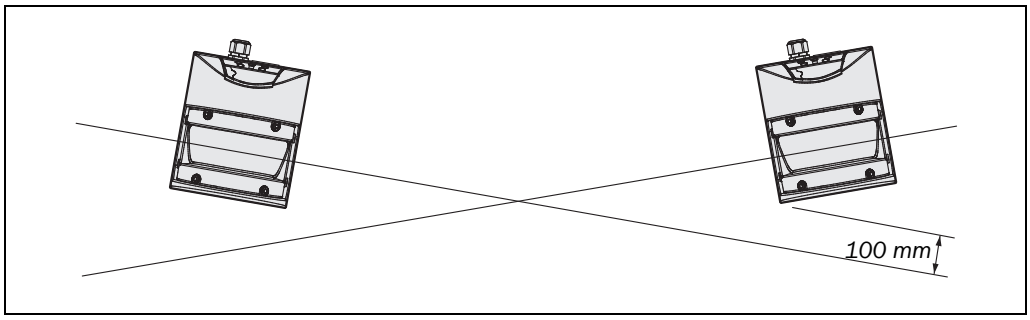

Fig. 60: Reverse mounting, parallel

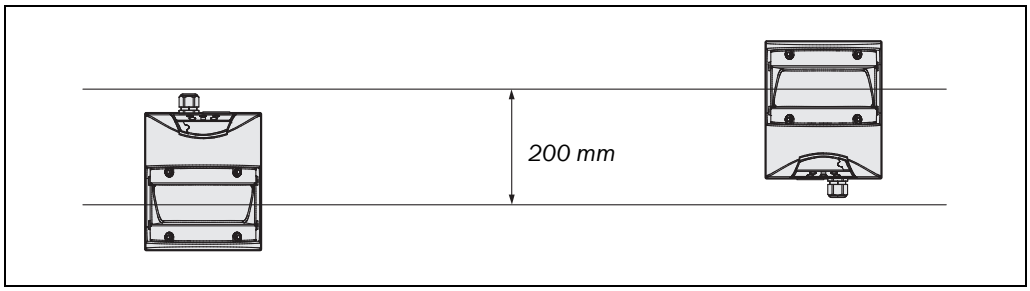

© SICK AG • Industrial Safety Systems • Germany • All rights reserved

6 Electrical installation

WARNING

Switch the entire machine/system off line!

The machine/system could unintentionally start up while you are connecting the devices.

➢ Ensure that the entire machine/system is disconnected during the electrical installation.

Connect OSSD1 and OSSD2 separately!

You are not allowed to connect OSSD1 and OSSD2 together, otherwise signal safety will not be ensured.

➢ Ensure that the machine controller processes the two signals separately.

Downstream contactors must be positively guided and monitored.

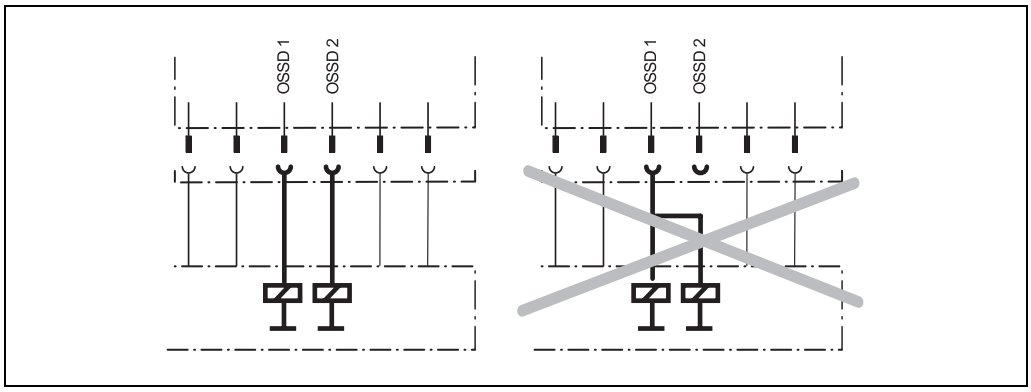

Only ever connect one downstream switching element to an OSSD!

Each output signal switching device (OSSD) is only allowed to be connected to one switching element (e.g. relay or contactor). If several switching elements are required, you must choose a suitable form of contact duplication.

© SICK AG • Industrial Safety Systems • Germany • All rights reserved

Prevent the occurrence of a potential difference between the load and the protective device!

➢ If you connect loads that are not reverse-polarity protected to the OSSDs or the safety outputs, you must connect the 0 V connections of these loads and those of the corresponding protective device individually and directly to the same 0 V terminal strip. This is the only way to ensure that, in the event of a defect, there can be no potential difference between the 0 V connections of the loads and those of the corresponding protective device.

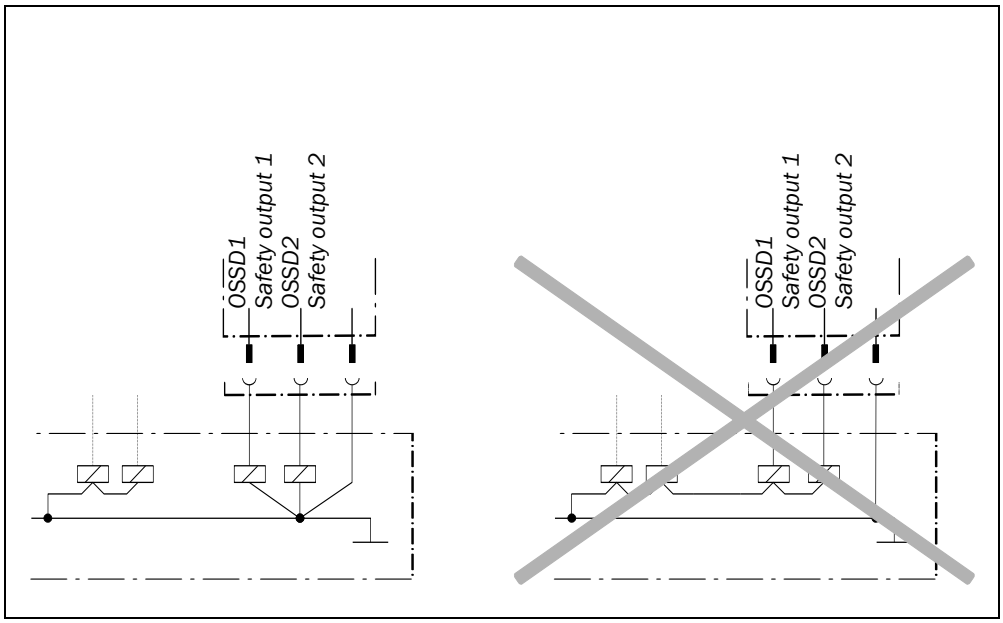

Notes

➢ Route all cables and connection cables such that they are protected from damage.

➢ If you use the S3000 for the protection of hazardous areas: Ensure that also the controller connected and all devices related to safety have the required category as per EN ISO 13849-1 or the required performance level as per EN ISO 13849!

➢ If you use screened cables, lay the screen evenly around the cable gland.

➢ Ensure that the S3000 is adequately protected electrically. You will find the electrical data necessary for determining the correct fuse in section 12.4 “Data sheet” on page 147.

© SICK AG • Industrial Safety Systems • Germany • All rights reserved

6.1 System connection

You will find all inputs and outputs on the S3000 on the 30-pin screw terminal connection in the system plug. You can either make connections directly to the terminal strip on the system plug or use a pre-assembled system plug from SICK (see section 6.3 on page 101).

Fig. 61: Screw terminal strip on the system plug

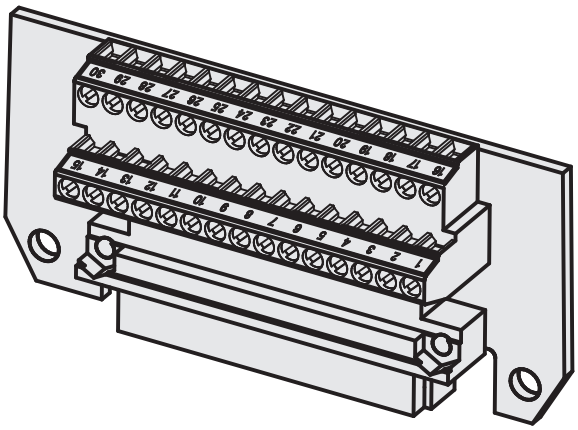

The system plug pin assignments vary depending on the S3000 variant.

Notes
- If the cable gland/blanking plug is missing or not tightened, or if fixing screws are missing or not tightened on the system plug, the IP 65 enclosure rating is not met.
- All inputs and outputs on the S3000 are to be used only in the context specified.

Wiring in accordance with EMC regulations

The quality of the shield is essentially dependent on the quality of the connection of the screen. In principle the best screening action can only be achieved with the connection of the screen at both ends using large area connections.

➢ To connect the screen on the S3000 use the EMC cable glands M12 (see Tab. 50 on page 165).

➢ Use similar cable glands on the incremental encoders.

➢ If it is not possible to connect the screen via threaded fittings (e.g. on bus nodes), connect the screen physically close, e.g. to a control cabinet chassis using a metal clamp.

Notes
- If you want to operate two safety laser scanners in a system (communication via EFI), then the same earthing method must be used for both safety laser scanners.
- If there is a PE in an installation, it can be used for the connection of the FE. However a functional earth connection (FE) is never allowed to be used as a PE!

Functional earth

To achieve the specified EMC safety, the functional earth FE must be connected (e.g. to the vehicle's or system's central earth star point).

Note Unlike the S300 and the S300 Mini, the S3000 has no separate functional earth connection (FE). If required for the application, an FE connection can be connected to the housing (the S3000 complies with electrical protection class II and for this reason the housing can be used for the connection of this functional earth).

© SICK AG • Industrial Safety Systems • Germany • All rights reserved

6.1.1 Pin assignments of the I/O modules

Tab. 23: Pin assignments of the I/O modules

Pin	Signal	Function	Standard	Advanced	Professional	Expert	Remote
1	+24 V DC	Supply voltage S3000	■	■	■	■	■
2	0 V DC	Supply voltage S3000	■	■	■	■	■
3	OSSD1	Output signal switching device	■	■	■	■	■
4	OSSD2	Output signal switching device	■	■	■	■	■
5	RESET	Input, Reset	■	■	■	■	■
6	EDM	Input, external device monitoring	■	■	■	■	■
7	UNI-I/O1/ ERR	Universal I/O and application diagnostic output or connection for a jumper for addressing as guest[21)]	■	■	■	■	■
8	UNI-I/O2/ RES_REQ	Universal I/O or output for Reset required	■	■	■	■	■
9	UNI-I/O3/ WF	Universal I/O or output for Object in warning field	■	■	■	■	■
10	A1	Static control input A or connection for a jumper for addressing as guest[21)]	■[22)]	■	■	■	■[22)]
11	A2	Static control input A		■	■	■	
12	B1	Static control input B		■	■	■	
13	B2	Static control input B		■	■	■	
14	EFI_A	Enhanced function interface = safe SICK device communication	■	■	■	■	■
15	EFI_B		■	■	■	■	■
16	+24 V DC	Supply voltage incremental encoder 1			■	■	
17	GND				■	■	
18	C1 or INC1_0	Static control input C or dynamic control input (incremental encoder input) 1			■	■	
19	D1 or INC1_90	Static control input D or dynamic control input (incremental encoder input) 1			■	■	
20	+24 V DC	Supply voltage incremental encoder 2			■	■	
21	GND				■	■	
22	C2 or INC2_0	Static control input C or dynamic control input (incremental encoder input) 2			■	■	

21) In an EFI system, a device must be defined as a guest using a jumper between pin 7 and pin 10. This is also necessary if several safety laser scanners are connected to one EFI string on a Flexi Soft safety controller.
22) No control input A on S3000 Standard and Remote.

© SICK AG • Industrial Safety Systems • Germany • All rights reserved

Pin	Signal	Function	Standard	Advanced	Professional	Expert	Remote
23	D2 or INC2_90	Static control input D or dynamic control input (incremental encoder input) 2			■	■	
24	Reserved, do not use!						
25	RxD–	RS-422 interface for output of measured data	■	■	■	■	■
26	RxD+		■	■	■	■	■
27	TxD+		■	■	■	■	■
28	TxD–		■	■	■	■	■
29	Reserved, do not use!						
30	Reserved, do not use!						

Incremental encoder specification

WARNING

Never supply both incremental encoders using one supply cable!

- The connection cables for the incremental encoders must each be in a separate plastic-sheathed cable as otherwise a cable break could cause an error that could remain undetected.
- The power supply to the two incremental encoders must be independent. For this purpose use the connection terminals provided, 16 and 17 as well as 20 and 21.
- Each incremental encoder output (for 0° or 90°) is only allowed to be connected to one control input, e.g. C1/D1 or C2/D2.

Both incremental encoders must meet the following specifications:

- two-channel rotary encoder with 90° phase offset
- supply voltage: 24 V DC
- outputs: push/pull outputs
- enclosure rating IP 54 or better
- screened cable
- max. pulse frequency: 100 kHz
- min. number of pulses: 50 pulses per cm

Recommendation

You can procure suitable incremental encoders from SICK AG, tel.: +49 211/5301-250 or at www.sick.com. Or contact your local SICK representative.

Control inputs

You can only connect the input signals to **one** safety laser scanner. Distributed connection of the input signals to two safety laser scanners is not possible.

© SICK AG • Industrial Safety Systems • Germany • All rights reserved

EFI systems

Connect EFI_A on the first device with EFI_A on the second device and EFI_B on the first device with EFI_B on the second device.

Notes

- Always use screened twisted pair cables!
- If the length of the cable to the safety laser scanner is more than 30 m, the shield is to be connected as close as possible to the device.

WARNING

In an EFI system with two safety laser scanners, set the address of one of the scanners to guest!

To differentiate unambiguously between the host and guest device in an EFI system, one S3000 must be configured as the guest. For this purpose a jumper is wired between the connection terminals 7 (ERR) and 10 (A1).

The jumper always defines the guest device. This jumper is never allowed to be fitted on the host device.

RS-422 interface

Fig. 62: Connection sketch RS-422 interface

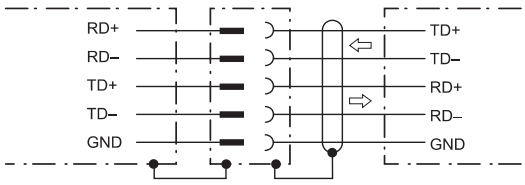

6.2 System plug assembly

The system plug has holes on the top and rear. Suitable cable entries for these holes are included with the device. The number of cable entries varies (see also section 13.3.4 “System plug” on page 164):

- system plug SX0A-A0000B:
  - 1 cable entry without M12 cable gland (blanking plug)
  - 1 cable entry with M20 cable gland
  - 2 blanking plugs for the unused outlets

Fig. 63: System plug SX0A-A0000B

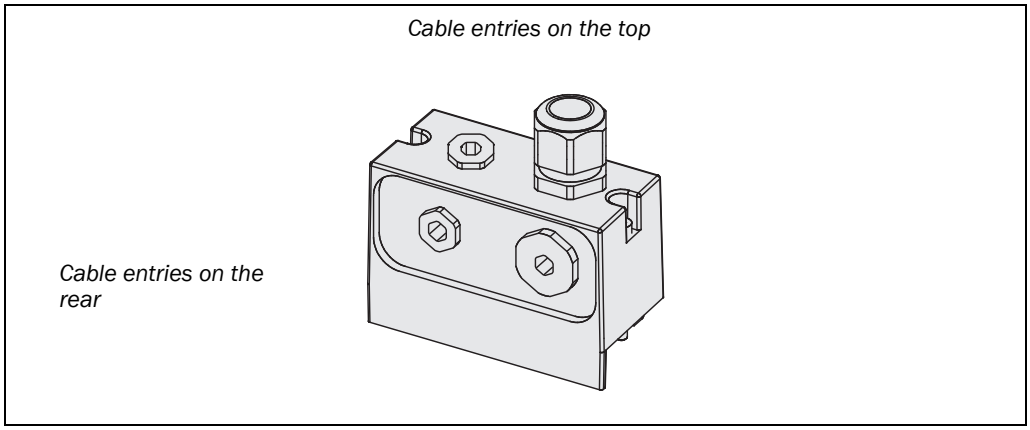

© SICK AG • Industrial Safety Systems • Germany • All rights reserved

- system plug SX0A-A0000D:
  - 3 cable entries without M12 cable gland (blanking plugs)
  - 1 cable entry with M20 cable gland
  - 4 blanking plugs for the unused outlets

Fig. 64: System plug SX0A-A0000D

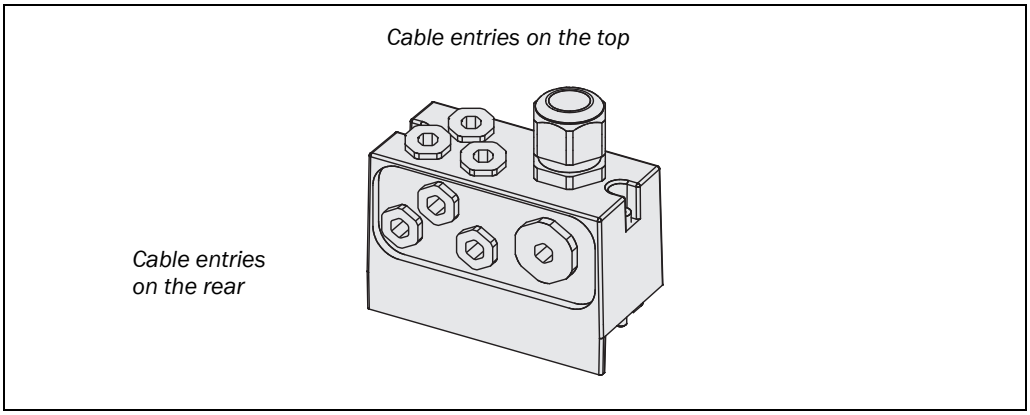

Depending on the application use suitable cable entries on the top or rear. For the EFI cables you must choose EMC-proof cable glands (see 13.3.6 “Self assembly connecting cables” on page 165).

Tab. 24: Use the cable entries supplied

Cable entry	Cable diameter	Usage
M20	6-12 mm	• System cables (supply voltage, outputs, static inputs)
M12 (only if supplied)	3-6.5 mm	• Universal I/Os • Incremental encoder • RS-422 data cables • EFI

Use the following wire cross-sections for the individual connections:

Tab. 25: Recommended wire cross-sections

Cable	Recommended wire cross-sections	Screened
System cables (supply voltage, outputs, static inputs)	9-17 cores 0.5-1 mm²	No
Incremental encoder	4 × 0.25 mm²	Yes
EFI	1 × 2 × 0.22 mm²	Yes
Universal I/Os	2 × 0.25 mm²	No
RS-422 data cables	4 × 0.25 mm²	Yes

WARNING

The length of the spare cable should be such that the system plug cannot inadvertently be plugged into a neighboring S3000!

From experience 20 to 30 cm spare cable at the safety laser scanner have proven to be adequate. In this way you avoid the inadvertent connection of the system plug to a neighboring S3000 and operation of an S3000 with an incorrect configuration. The spare cable enables you to change the S3000 with ease if necessary.

Recommendation

If you want to assemble the system plug yourself, you will find suitable cables in the ordering information (see section 13.3.6 “Self assembly connecting cables” on page 165).

© SICK AG • Industrial Safety Systems • Germany • All rights reserved

6.3 Pre-assembled system plugs

6.3.1 Pre-assembled system plugs with flying leads

To connect the S3000 variants, the following pre-assembled system plugs are available (see also section 13.3.4 “System plug” on page 164):

- SX0A-B0905G
  - for S3000 Standard and S3000 Remote
  - with 9 unscreened cores
  - 5 m long
  - cable outlet on the bottom
- SX0A-B0905B, SX0A-B0910B and SX0A-B0920B
  - for S3000 Standard and S3000 Remote
  - with 9 unscreened cores
  - 5, 10 or 20 m long
  - cable outlet on the top
- SX0A-B1305B, SX0A-B1310B and SX0A-B1320B
  - for S3000 Advanced
  - with 13 unscreened cores
  - 5, 10 or 20 m long
  - cable outlet on the top
- SX0A-B1305D and SX0A-B1310D
  - for S3000 Professional and S3000 Expert with static and dynamic inputs
  - with 13 unscreened cores
  - 5 or 10 m long
  - with 3 M12 cable entries for incremental encoders
  - cable outlet on the top
- SX0A-B1705B, SX0A-B1710B and SX0A-B1720B
  - for S3000 Professional and S3000 Expert with static inputs
  - with 17 unscreened cores
  - 5, 10 or 20 m long
  - cable outlet on the top

© SICK AG • Industrial Safety Systems • Germany • All rights reserved

Tab. 26: Pin assignment pre-assembled system plug

Pin	Signal	Wire color	SX0A-B0905G	SX0A-B0905B SX0A-B0910B SX0A-B0920B	SX0A-B1305B SX0A-B1310B SX0A-B1320B	SX0A-B1305D SX0A-B1310D	SX0A-B1705B SX0A-B1710B SX0A-B1720B
1	+24 V DC	Brown	■	■	■	■	■
2	0 V DC	Blue	■	■	■	■	■
3	OSSD1	Gray	■	■	■	■	■
4	OSSD2	Pink	■	■	■	■	■
5	RESET	Red	■	■	■	■	■
6	EDM	Yellow	■	■	■	■	■
7	UNI-I/O1/ERR	White/black	■	■	■	■	■
8	UNI-I/O2/ RES_REQ	Red/blue	■	■	■	■	■
9	UNI-I/O3/WF	White/brown	■	■	■	■	■
10	A1	White/red			■	■	■
11	A2	White/orange			■	■	■
12	B1	White/yellow			■	■	■
13	B2	White/green			■	■	■
18	C1 or INC1_0	White/blue					■
19	D1 or INC1_90	White/gray					■
22	C2 or INC2_0	White/purple					■
23	D2 or INC2_90	White					■
Number of top mounted cable glands (cable entries to the rear sealed with blanking plugs)			2	2	2	4	2

Note **Disconnect all cores from the system plug that are not necessary for the related application! (in this way you will prevent possible interference.)**

© SICK AG • Industrial Safety Systems • Germany • All rights reserved

6.4 Configuration connection M8 × 4 (serial interface)

Fig. 65: Pin assignment configuration connection M8 × 4

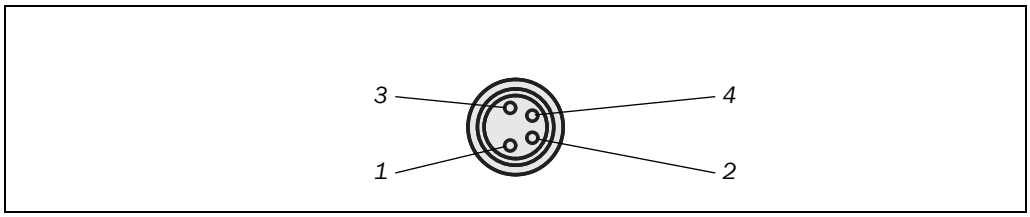

Tab. 27: Pin assignment configuration connection M8 × 4

Pin	S3000	PC-side RS-232-D-Sub
1	Reserved	Not assigned
2	RxD	Pin 3
3	0 V DC (voltage supply)	Pin 5
4	TxD	Pin 2

Notes

- After configuration always remove the connecting cable from the configuration connection!
- After the configuration of the device has been completed, locate the attached protection cap to cover the configuration connection.

© SICK AG • Industrial Safety Systems • Germany • All rights reserved

7 Application examples and connection diagrams

The examples shown are only provided as an aid for your planning. You may need to consider additional protection measures for your application.

In the examples with protective field switching, note that at the time of the switching there may already be a person in the protective field. Only by means of switching in the correct time frame (i.e. before the danger occurs at this point) is reliable protection provided (see section 5.6 “Time for monitoring case switching” on page 86).

7.1 Stationary applications

7.1.1 Applications with one monitored area (S3000 Standard)

Fig. 66: Hazardous area protection with S3000 Standard

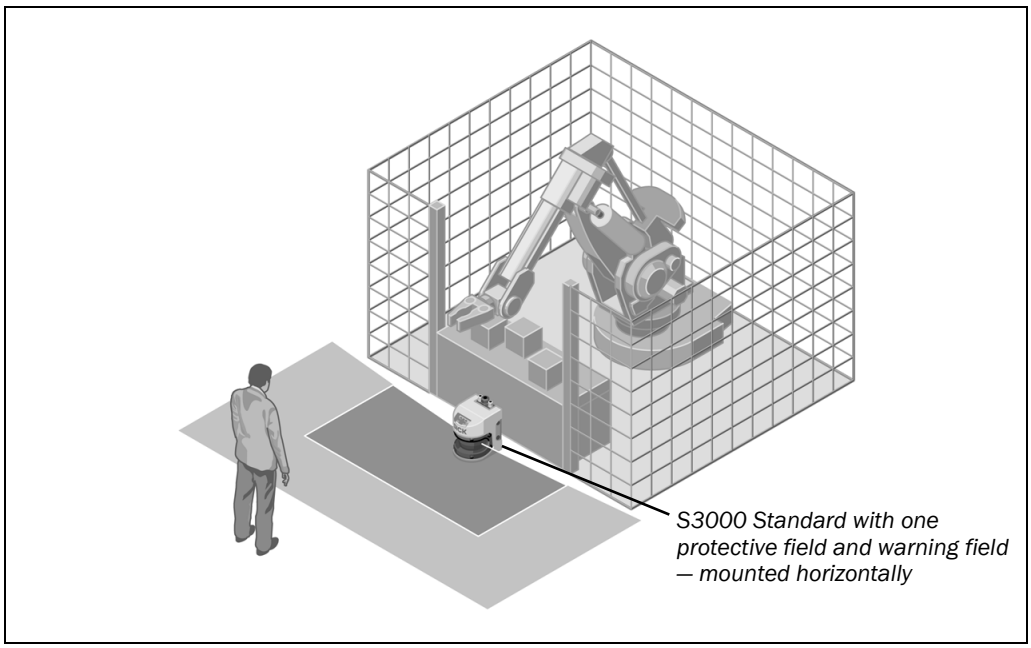

The area is permanently monitored by the S3000.

© SICK AG • Industrial Safety Systems • Germany • All rights reserved

Fig. 67: Access protection with S3000 Standard

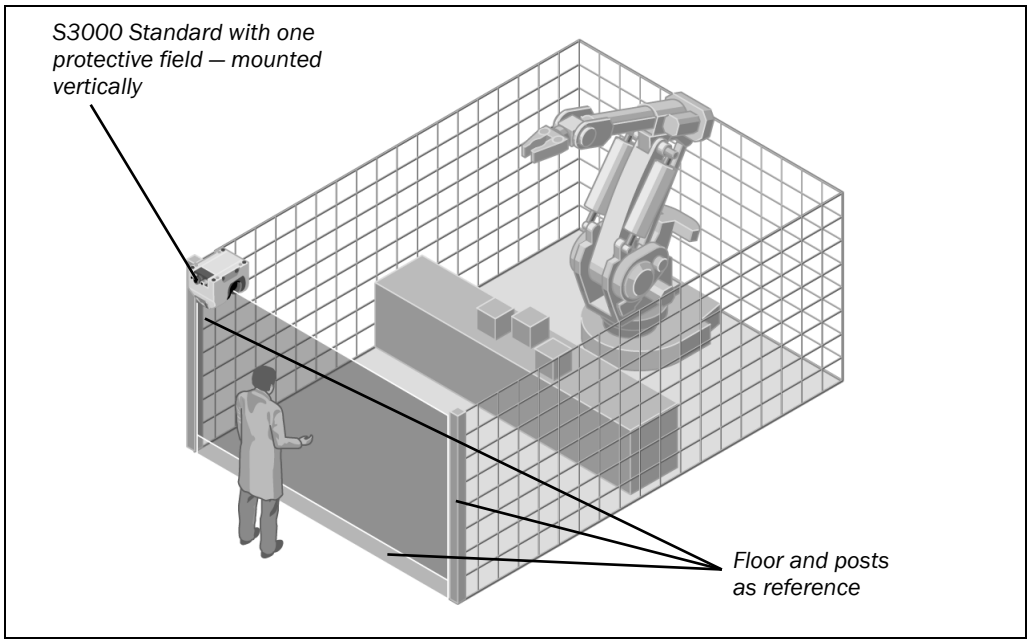

The access is monitored permanently. For safety against manipulation on the S3000, e.g. the floor is used as a reference. If the alignment of the S3000 changes (e.g. due to change to the mounting), the S3000 shuts down.

7.1.2 Applications with multiple monitored areas (S3000 Advanced)

Fig. 68: Hazardous area protection with S3000 Advanced

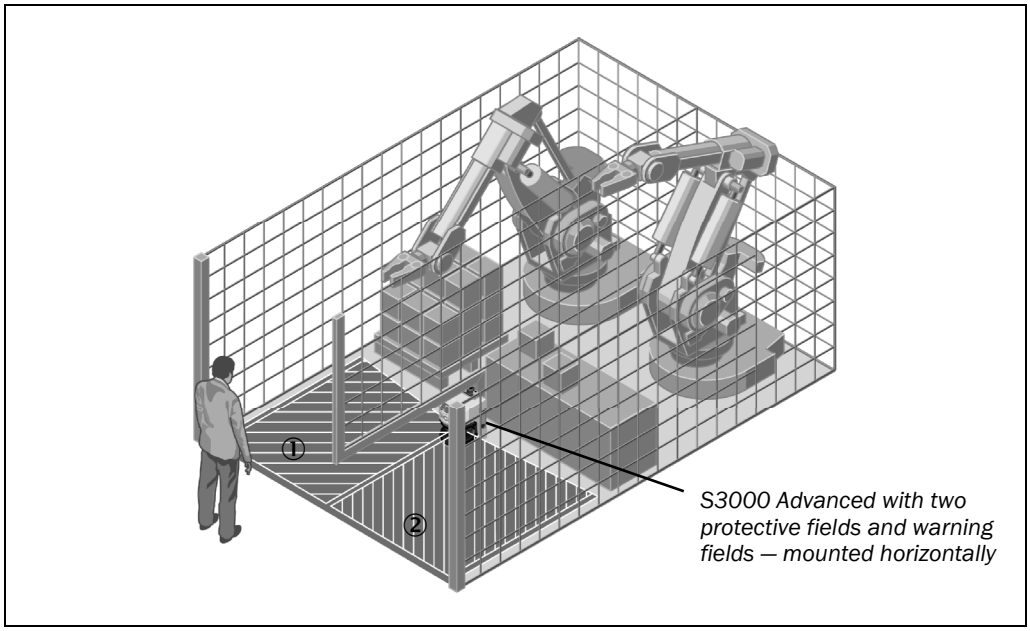

The two areas to be monitored are switched using the static control inputs depending on the phase of the process on the machine. For example the area ① or the area ② can be monitored, both areas can be monitored or none.

© SICK AG • Industrial Safety Systems • Germany • All rights reserved

Fig. 69: Access protection with S3000 Advanced

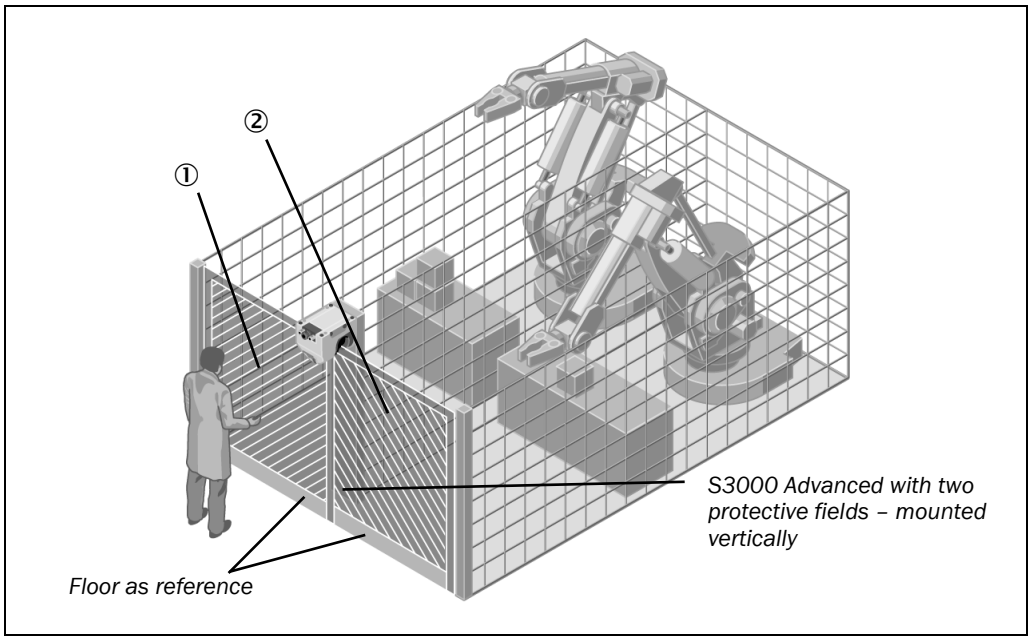

The two areas to be monitored are switched using the static control inputs depending on the process phase. For example the area ① or the area ② can be monitored, both areas can be monitored or none. For safety against manipulation on the S3000, e.g. the floor is used as a reference in each case. If the alignment of the S3000 changes (e.g. due to change to the mounting), the S3000 shuts down.

7.2 Mobile applications

7.2.1 Vehicle monitoring for unidirectional travel (S3000 Standard)

Fig. 70: Vehicle monitoring with S3000 Standard

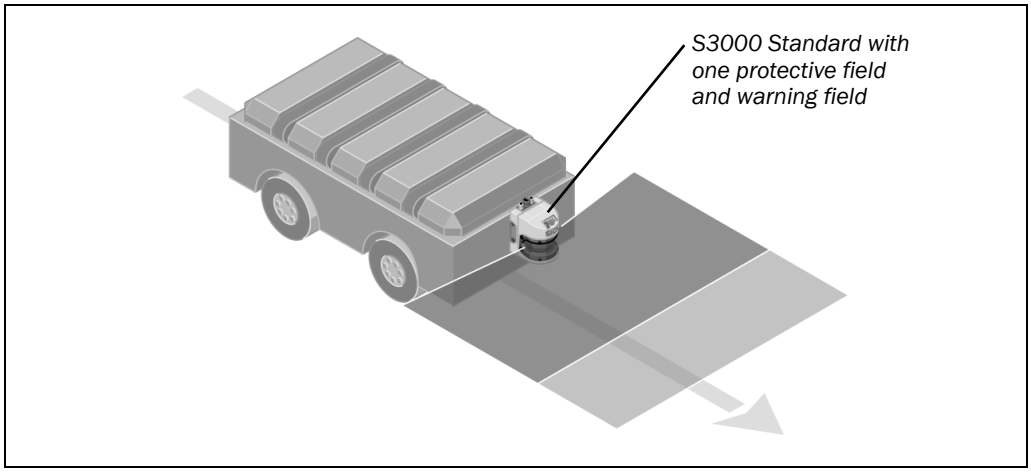

The S3000 monitors the area in one direction of travel and stops the vehicle as soon as there is an object in the protective field.

© SICK AG • Industrial Safety Systems • Germany • All rights reserved

7.2.2 Velocity-dependent vehicle monitoring for unidirectional travel (S3000 Professional)

Fig. 71: Velocity-dependent vehicle monitoring with S3000 Professional

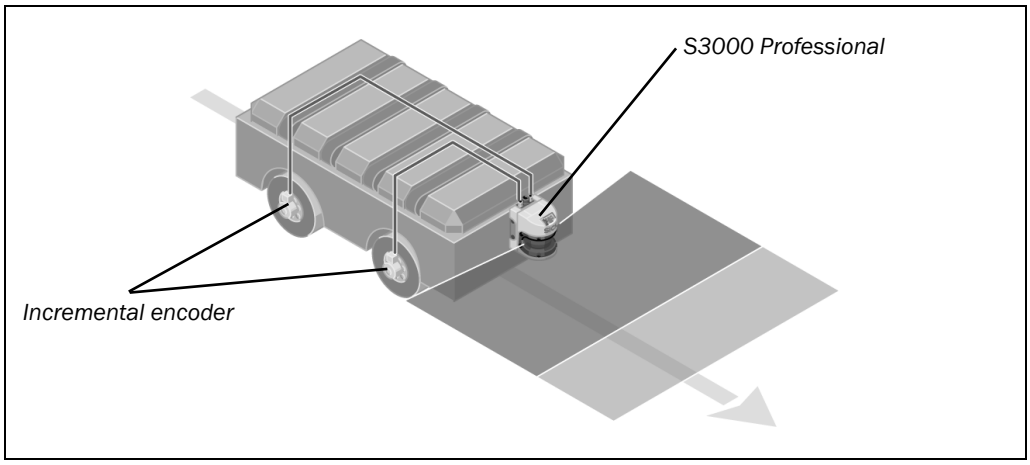

Using incremental encoders the S3000 Professional acquires the velocity of the vehicle via its dynamic control inputs. For different velocities, various field sets with protective fields and warning fields of varying sizes are configured in the S3000. The field sets are switched dynamically using the vehicle velocity.

7.2.3 Vehicle monitoring with determination of the surrounding contour and reflector detection (S3000 Expert)

Fig. 72: Mobile application with S3000 Expert

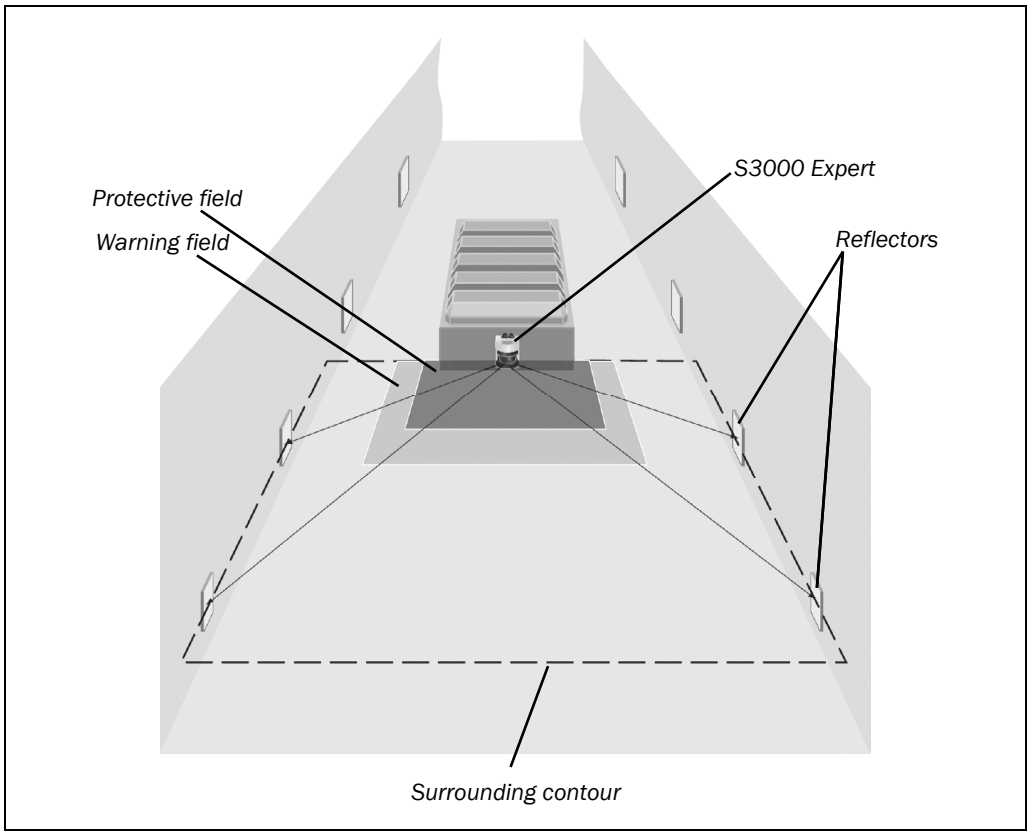

The S3000 monitors the area in one direction of travel and stops the vehicle as soon as there is an object in the protective field. In addition, the surrounding contour is measured and reflectors fitted to the walls detected. Surrounding contour and reflector detection are output via the RS-422 interface using configurable telegrams.

© SICK AG • Industrial Safety Systems • Germany • All rights reserved

7.2.4 Velocity-dependent vehicle monitoring for bi-directional travel (S3000 Professional with S3000 Remote)

Fig. 73: Mobile application with S3000 Professional

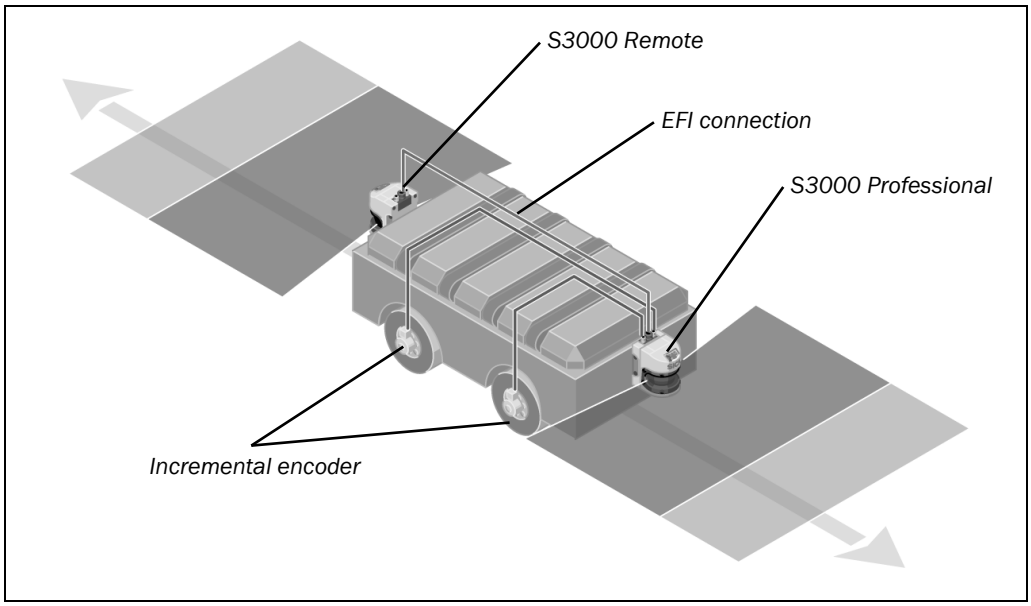

Using incremental encoders the S3000 Professional acquires the velocity of the vehicle via its dynamic control inputs. Various field sets of different sizes are configured in the S3000 for the different velocities. The field sets are switched dynamically using the vehicle velocity.

The S3000 Remote receives the values from the incremental encoders from the S3000 Professional via the EFI. It monitors the areas for the second direction of travel as a function of the velocity. As soon as there is an object in the protective field, the S3000 Remote switches the OSSDs on the S3000 Professional to the OFF state over the EFI interface.

© SICK AG • Industrial Safety Systems • Germany • All rights reserved

7.3 Applications with the Flexi Soft safety controller

7.3.1 Vehicle monitoring with four safety laser scanners and dynamic protective field switching using the Flexi Soft safety controller

Fig. 74: Mobile application with S3000 Expert and S300 Professional

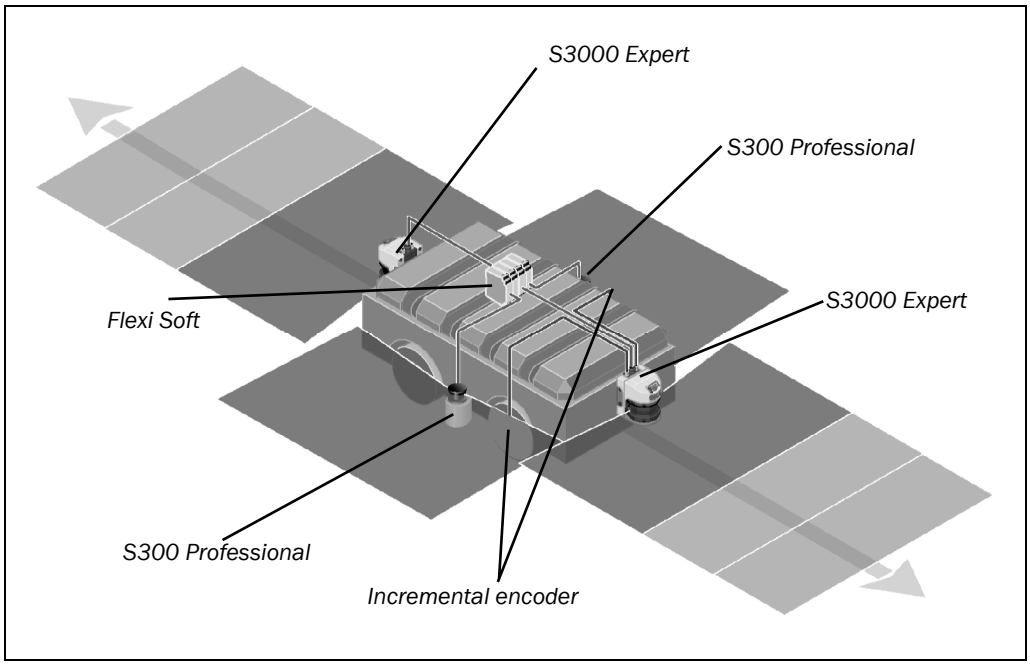

In the triple field mode, two warning fields can be configured for the front and rear S3000 Expert. Incremental encoders are connected to the front S3000 Expert and supply velocity-dependent input signals.

The velocity information is transferred to the safety laser scanner on the rear via the Flexi Soft safety controller using the EFI status message and is used for monitoring case switching.

© SICK AG • Industrial Safety Systems • Germany • All rights reserved

7.4 Applications with sens:Control

With sens:Control, the safe control solutions, SICK provides you with an entire range of interface products that were specially developed for interfacing safety products and machines.

For complex applications the S3000 can be integrated into sens:Control family safety systems. In this way the functions of the safety laser scanner can be enhanced and corresponding applications realized.

Note Please observe the related operating instructions for the sens:Control products.

7.4.1 More complex system expansions

Protection of two separate working areas with one S3000 Standard and a safety controller.

Fig. 75: S3000 with safety controller

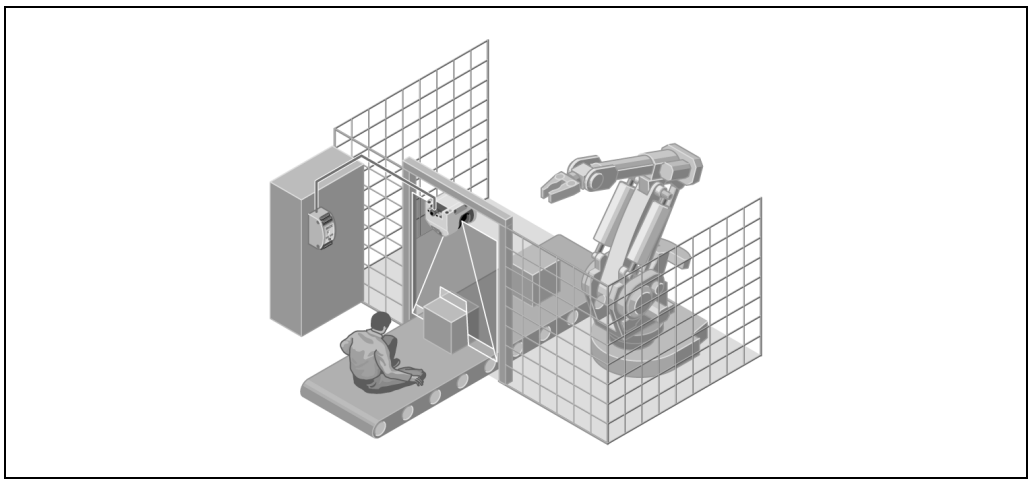

7.4.2 Bus interfaces

All S3000 variants are equipped with EFI (safe SICK device communication). All safety-relevant signals are transmitted using this interface. A bus connection to a safe fieldbus is possible using the sens:Control device family.

Fig. 76: S3000 bus interface

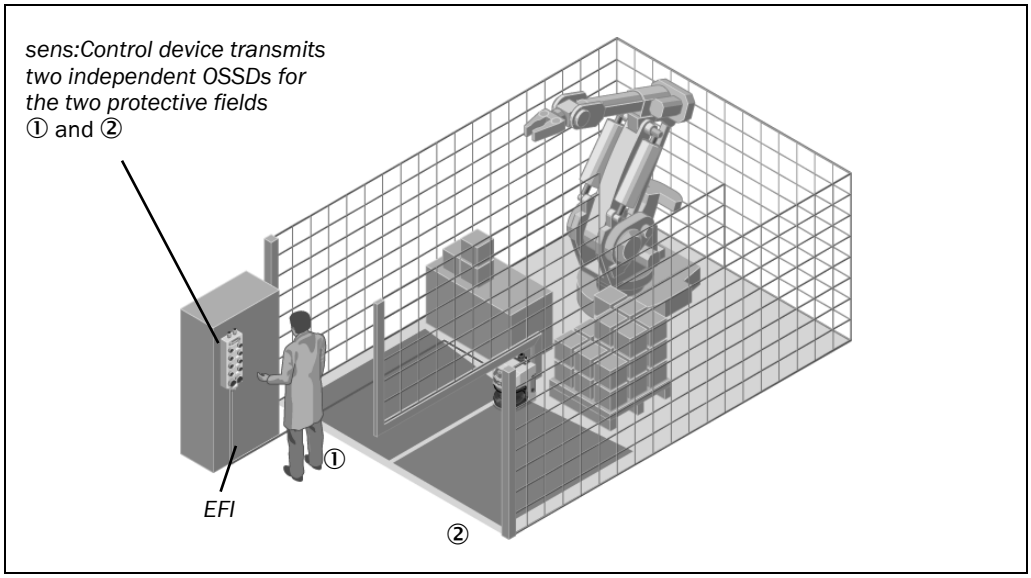

© SICK AG • Industrial Safety Systems • Germany • All rights reserved

7.5 Connection diagrams

Note Only use relays with positively guided contacts. The protection elements connected in parallel with the contactors are used for arc-suppression.

Ensure that there is adequate arc-suppression at the relay contacts. Take into account that arc-suppressors may lengthen the response time.

If you want to operate two safety laser scanners in a system (communication via EFI), then the same earthing method must be used for both safety laser scanners.

The safety-related parts of the control system that effect the switching of the active protective field must meet the requirements PL d as per EN ISO 13849-1 or SIL2 as per EN 62061:

- in case of position-dependent switching by means of two independently wired signal sources, e.g. two independent position switches
- in case of velocity-dependent switching by means of two independently wired signal sources, e.g. two independent encoders
- in case of manual operating mode-dependent switching by means of a suitable manually operated control switch

Sketch key

- k1 and k2 or k3 and k4 = Output circuits
  These contacts are to be connected to the controller such that, with the output circuit open, the dangerous state is disabled. For categories 3 and 4 according to EN ISO 13849-1, the integration must be dual-channel (x/y paths). Observe the maximum values for the loading of the outputs (see section 12.4 “Data sheet” on page 147).
- FE = Functional earth
  To achieve the specified EMC safety, the functional earth (FE) must be connected (e.g. to the vehicle’s or system’s central earth star point).
- H2 = Sensor for error/contamination
- H3 = Sensor for waiting for restart
- H8 = Sensor for warning field interruption

Note In the case of the examples with S3000 Expert or Flexi Soft, the universal I/O connections are to be configured such that they indicate the related states.

© SICK AG • Industrial Safety Systems • Germany • All rights reserved

7.5.1 Restart interlock and external device monitoring

Fig. 77: Connection diagram for restart interlock and external device monitoring

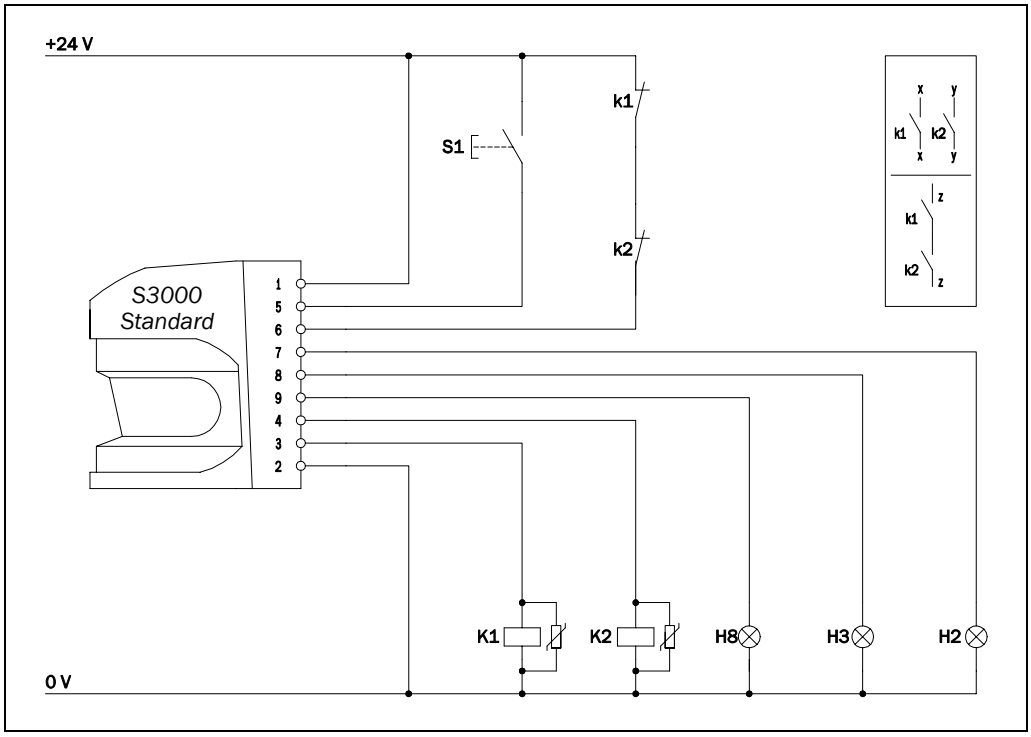

S3000 Standard in conjunction with relays/contactors; Operating mode: with restart interlock and external device monitoring.

7.5.2 Restart interlock and external device monitoring with UE10 series

Fig. 78: Connection diagram for restart interlock and external device monitoring using UE10 series

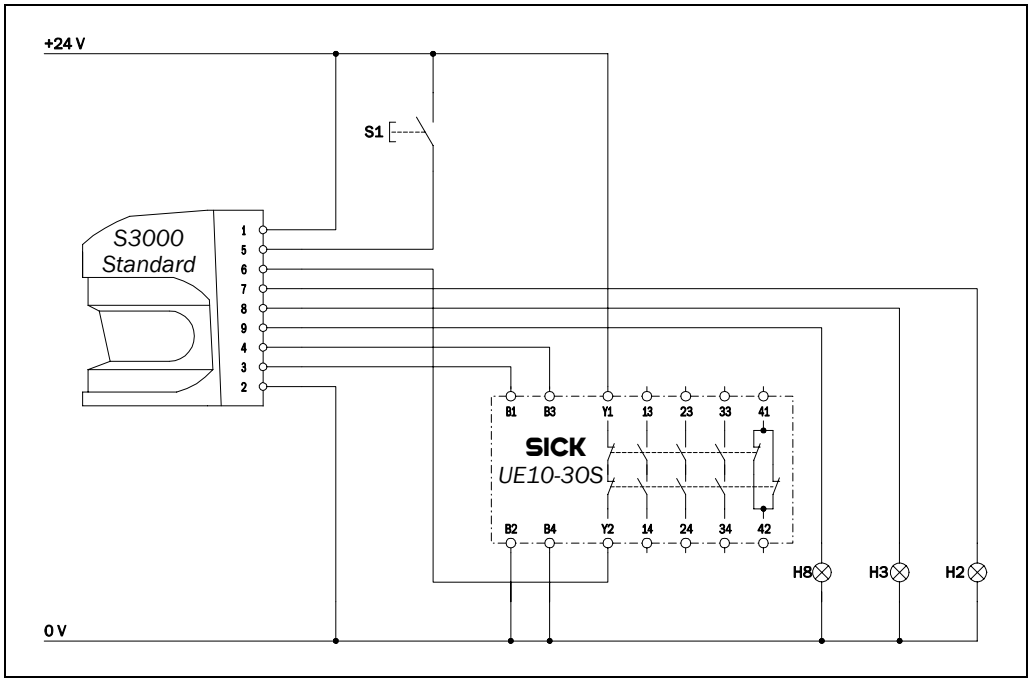

S3000 Standard in combination with UE10-3OS; Operating mode: with restart interlock and external device monitoring.

© SICK AG • Industrial Safety Systems • Germany • All rights reserved

7.5.3 Protective field switching with two static inputs

Fig. 79: Connection diagram for protective field switching using two static inputs

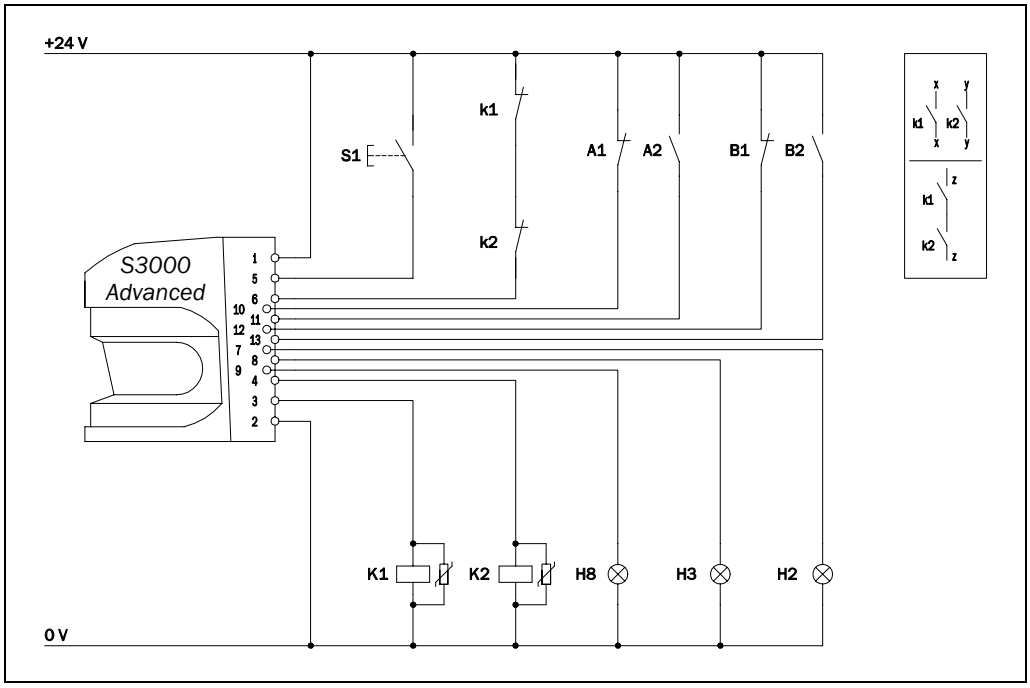

S3000 Advanced in conjunction with relays/contactors; Operating mode: with restart interlock and external device monitoring; Protective field switching by means of control inputs A and B.

7.5.4 Protective field switching with four static inputs

Fig. 80: Connection diagram for protective field switching using four static inputs

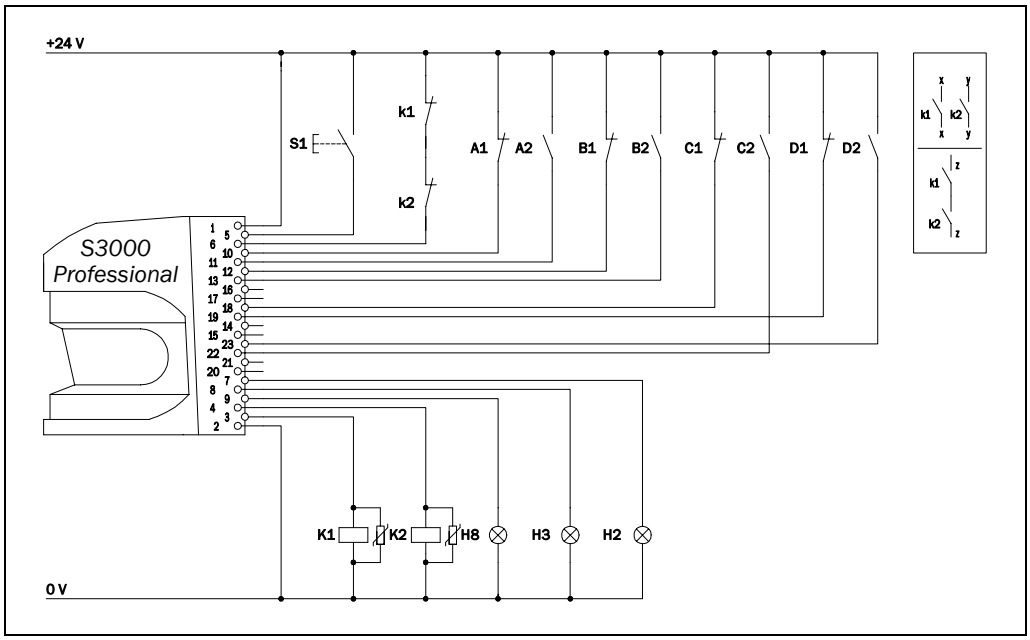

S3000 Professional in conjunction with relays/contactors; Operating mode: with restart interlock and external device monitoring; static protective field switching using the control inputs A to D.

© SICK AG • Industrial Safety Systems • Germany • All rights reserved

7.5.5 Protective field switching with static and dynamic inputs

Fig. 81: Connection diagram for protective field switching using static and dynamic inputs

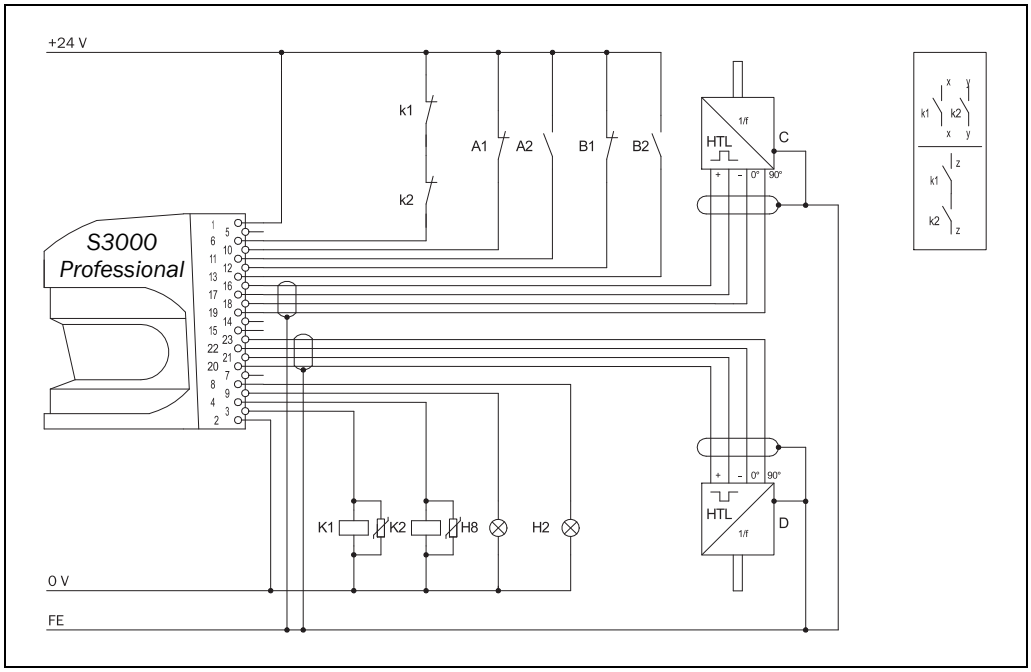

S3000 Professional in conjunction with relays/contactors; Operating mode: without restart interlock with external device monitoring; static protective field switching using the control inputs A and B as well as dynamic protective field switching using the incremental encoders C and D.

7.5.6 Protective field switching between two safety laser scanners with static inputs

Fig. 82: Connection diagram for protective field switching between two S3000 using static inputs

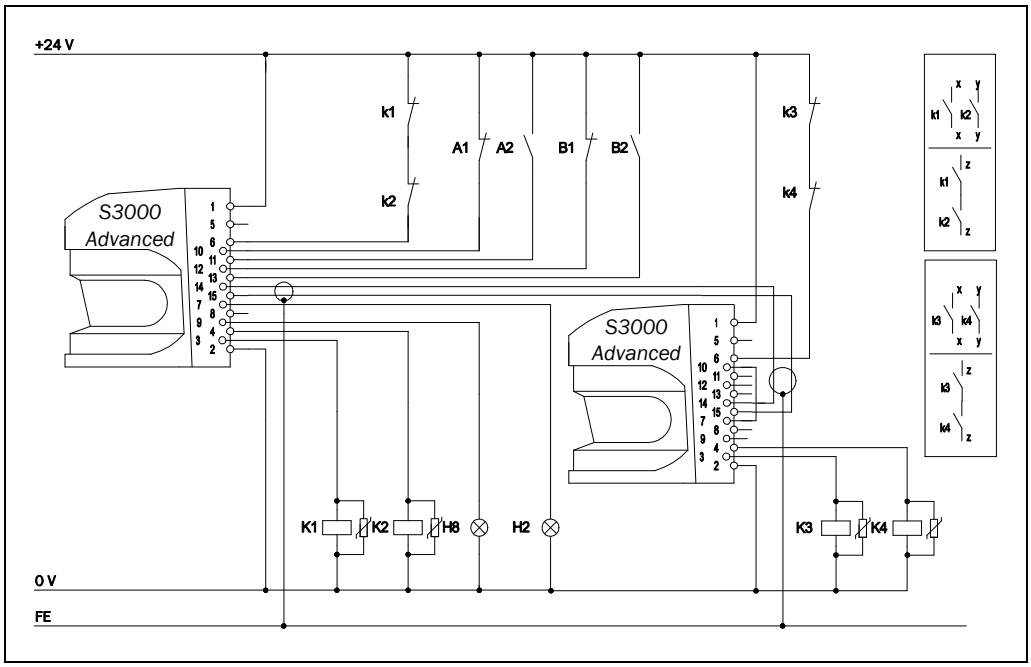

Two S3000 Advanced in an EFI system with relays/contactors; Operating mode: without restart interlock with external device monitoring; Protective field switching using control inputs A and B on separate OSSD pairs (simultaneous monitoring).

© SICK AG • Industrial Safety Systems • Germany • All rights reserved

Fig. 83: Connection diagram for protective field switching between S3000 and S300 Mini using static inputs

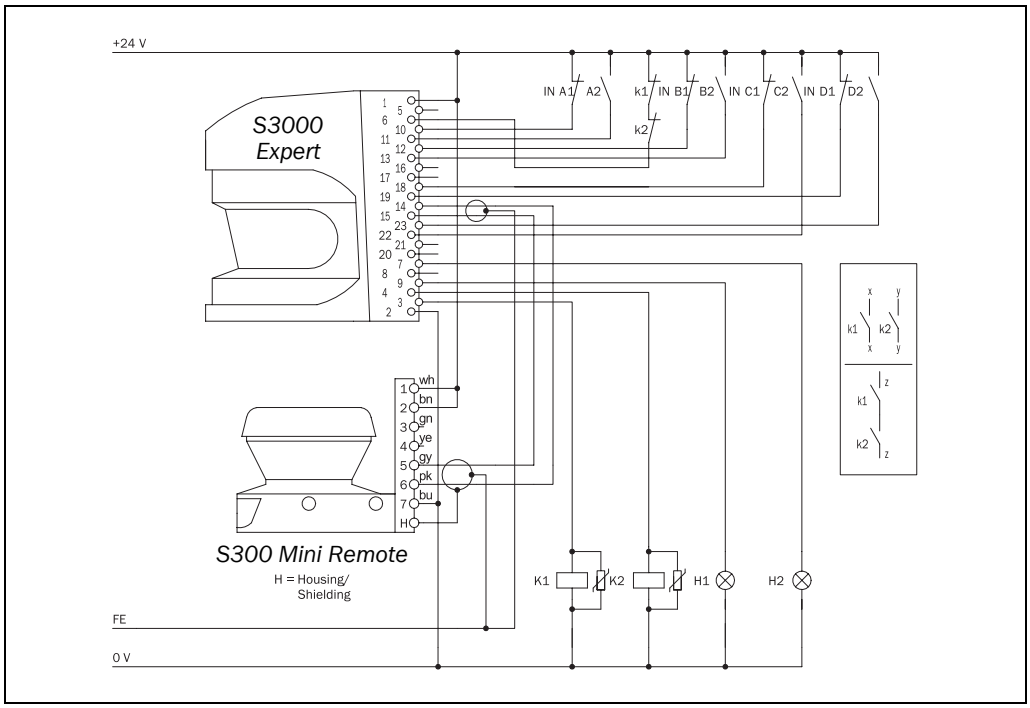

S3000 Expert with S300 Mini Remote in an EFI system with relays/contactors; Operating mode: without restart interlock with external device monitoring; Protective field switching using control inputs A to D.

Note If you use two safety laser scanners in one application, then you can only connect the input signals to one safety laser scanner. Distributed connection of the input signals to two safety laser scanners is not possible.

7.5.7 Protective field switching between two S3000 with static and dynamic inputs

Fig. 84: Connection diagram for protective field switching between two S3000 using static and dynamic inputs

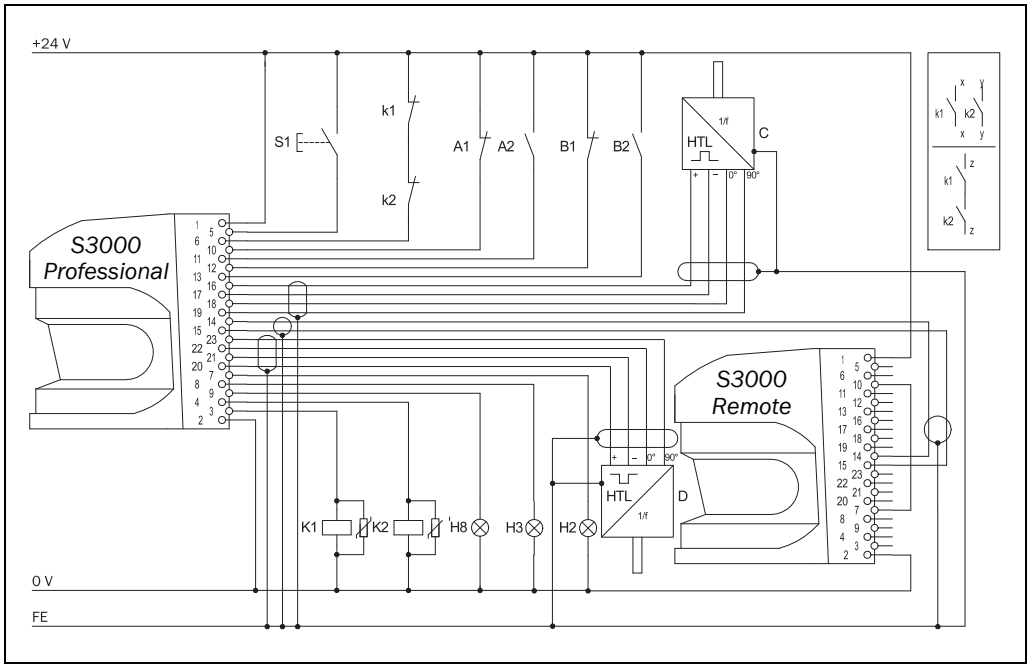

S3000 Professional and S3000 Remote in an EFI system with relays/contactors; Operating mode: with restart interlock and external device monitoring; direction of travel-dependent dynamic protective field switching using the incremental encoders C and D as well as static protective field switching using the control inputs A and B with sensor communication via EFI.

© SICK AG • Industrial Safety Systems • Germany • All rights reserved

7.5.8 Protective field switching between an S3000 and an S300 with static and dynamic inputs

Fig. 85: Connection diagram for protective field switching between an S3000 and an S300 using static and dynamic inputs

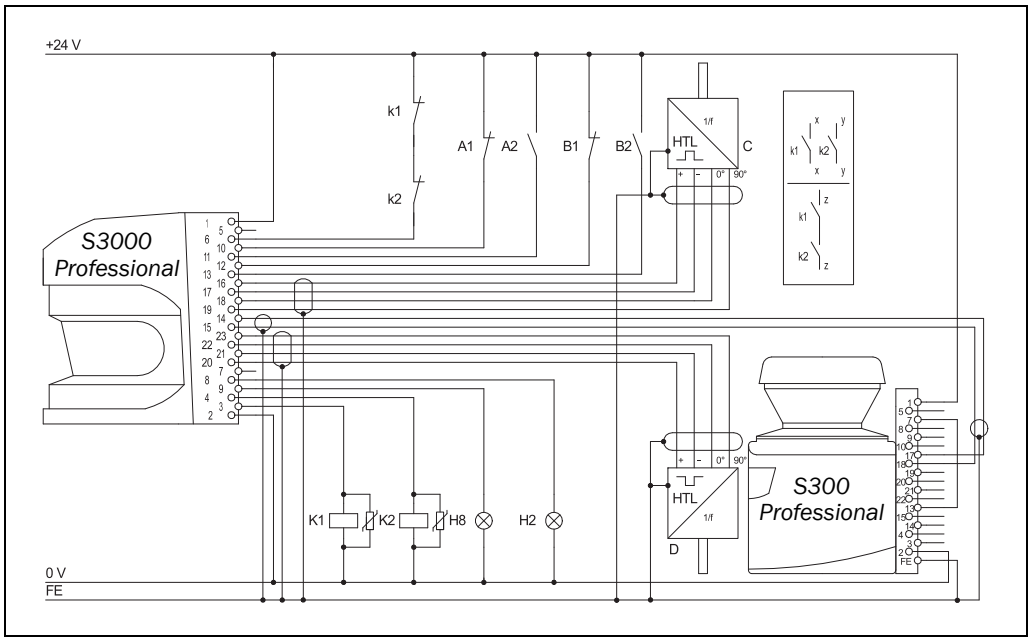

S3000 Professional with S300 Professional in an EFI system with relays/contactors; Operating mode: without restart interlock with external device monitoring; direction of travel-dependent dynamic protective field switching using the incremental encoders C and D as well as static protective field switching using the control inputs A and B of the S3000. The protective fields affect the OSSDs on the host.

Fig. 86: Connection diagram for protective field switching between an S3000 and an S300 Mini using static and dynamic inputs

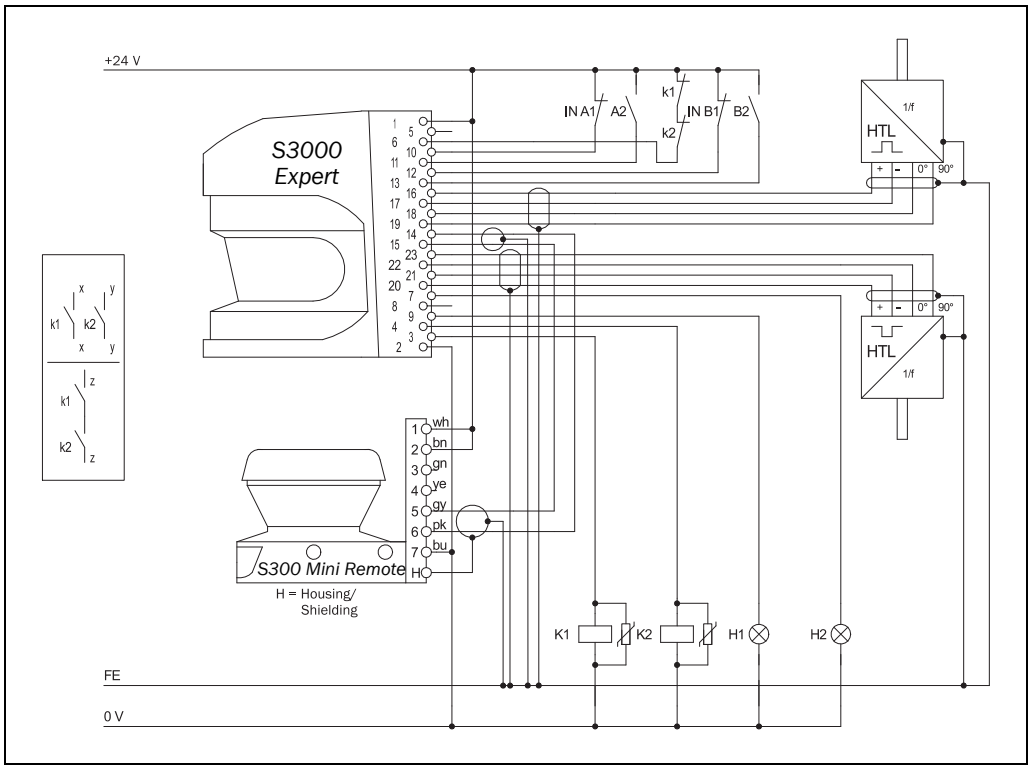

S3000 Expert with S300 Mini Remote in an EFI system with relays/contactors; Operating mode: without restart interlock with external device monitoring; direction of travel-dependent dynamic protective field switching using the incremental encoders C and D as well as static protective field switching using the control inputs A and B of the S3000. The protective fields affect the OSSDs on the host.

© SICK AG • Industrial Safety Systems • Germany • All rights reserved

7.5.9 Protective field switching with a Flexi Soft safety controller

Fig. 87: Connection diagram for protective field switching between two S3000 using a Flexi Soft safety controller

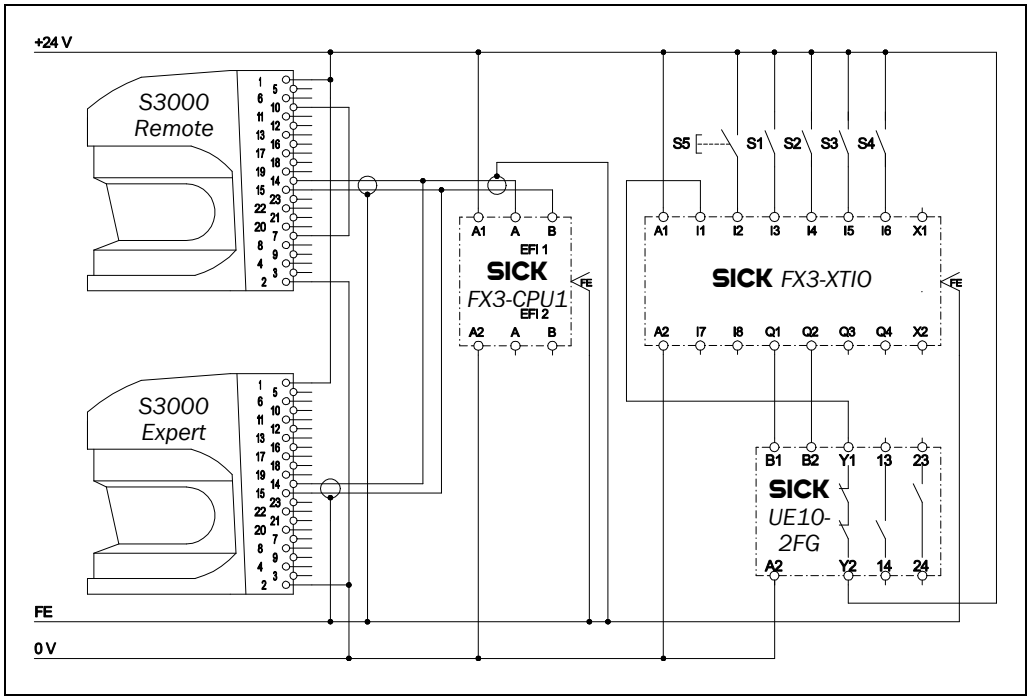

One S3000 Expert with one S3000 Remote in an EFI system; Protective field evaluation, restart interlock and EDM via EFI using a Flexi Soft safety controller. Static protective field switching using the control inputs S1 to S4 of the Flexi Soft safety controller.

Fig. 88: Connection diagram: protective field switching between S3000 and S300 using a Flexi Soft safety controller

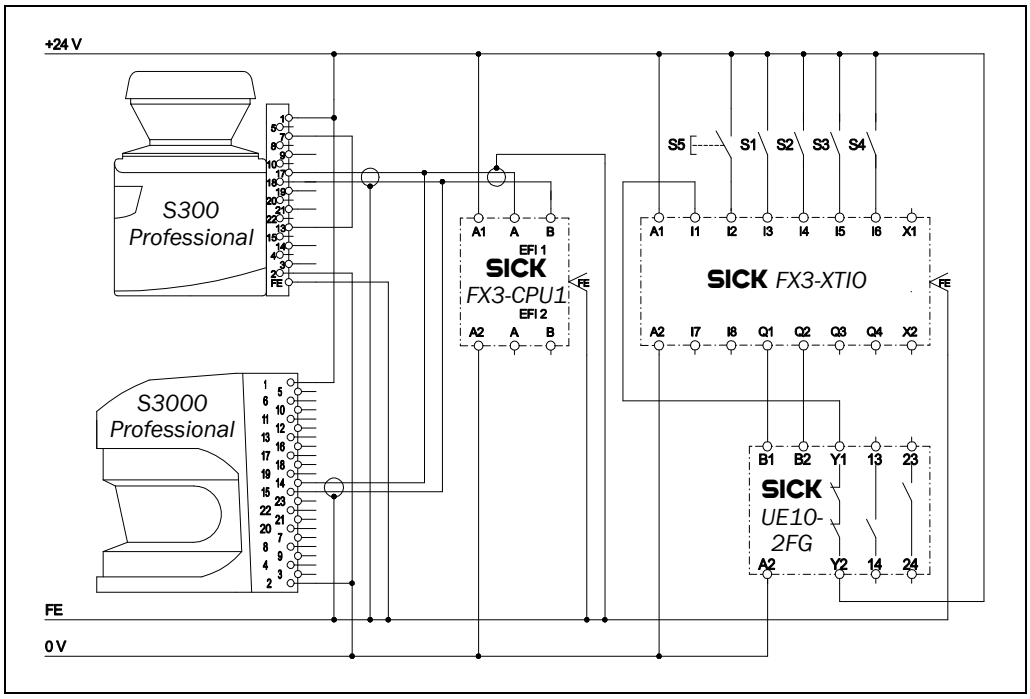

One S3000 Professional with one S300 Professional in an EFI system; Protective field evaluation, restart interlock and EDM via EFI using a Flexi Soft safety controller. Static protective field switching via EFI using the control inputs S1 to S4 of the Flexi Soft safety controller.

© SICK AG • Industrial Safety Systems • Germany • All rights reserved

8 Configuration

8.1 Default delivery status

The S3000 is delivered in a safe default status.

- The device status is **Waiting for configuration**.
- As a result, the output signal switching devices (OSSDs) are in the OFF state (the red LED illuminates: ⊜).
- The 7-segment display indicates 6.

© SICK AG • Industrial Safety Systems • Germany • All rights reserved

8.2 Preparation of the configuration

How to prepare the configuration:

➢ Make sure that the safety laser scanner has been correctly mounted and that the electrical connections are correct and in place.

➢ Have the necessary tools at hand.

To configure the safety laser scanner you need:

- CDS (Configuration & Diagnostic Software) on CD-ROM, version ≥ 3.6.7
- user manual for CDS on CD-ROM
- PC/Notebook with Windows NT 4/2000 Professional/XP/Vista/7 (32 Bit) and a serial RS-232 interface (PC/notebook not included)
- connecting cable between PC and S3000 (not included)

How to configure the S3000 with the aid of the CDS:

For configuration and diagnostics using the CDS, connect the PC to the configuration connection.

Fig. 89: Configuration connection

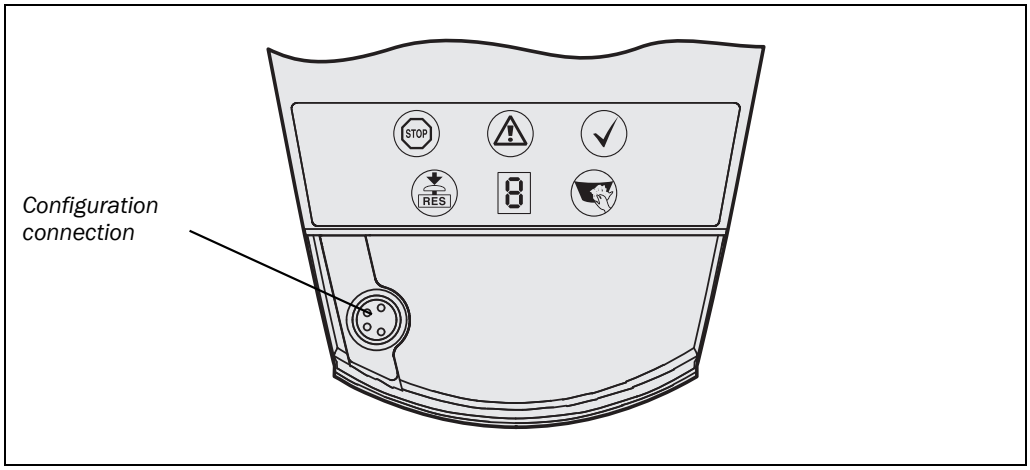

Two connection cables of different length are available for the connection of the PC/notebook to the S3000 (see section 13.3 “Accessories/spare parts” on page 163).

Notes

- Ensure you do not lay the service cable close to powerful electrical drives or cables carrying high currents. In this way you will avoid EMC effects on the service cable.
- The service cable is only allowed to be connected for configuration and diagnostics. The service cable must be disconnected and the protective cap fitted in operation.

To configure the device, please read the user manual for the CDS (Configuration & Diagnostic Software) and use the online help function of the program.

Note Use the password function in the CDS and protect the configuration settings from unauthorized access. Also ensure that the passwords are stored protected from unauthorized access.

© SICK AG • Industrial Safety Systems • Germany • All rights reserved

9 Commissioning

9.1 Initial commissioning

WARNING

Commissioning requires a thorough check by qualified safety personnel!

Before you operate a system protected by the S3000 safety laser scanner for the first time, make sure that the system is first checked and released by qualified safety personnel. Please read the notes in chapter 2 “On safety” on page 11.

➢ Prior to releasing the machine, check whether the access to the hazardous area is completely monitored by the protective devices. Also check at regular intervals after release of the machine (e.g. in the morning at the start of work) as to whether the S3000 correctly switches the OSSDs as soon as there is an object in the protective field. This test should be performed along all protective field boundaries as per the specific regulations for the application (see section 9.2 “Test notes” on page 121).

© SICK AG • Industrial Safety Systems • Germany • All rights reserved

9.1.1 Power-up sequence

After switching on the S3000 runs through the power up cycle. During the power up cycle, the 7-segment display indicates the device status.

During the initial commissioning of an S3000 the following indications are possible:

Tab. 28: 7-segment display during and after the power up sequence on initial commissioning

Step	Display	Meaning
1	', ¯, ', ,, _, ', -, .	Power-up cycle, testing the 7-segment display. All segments are activated sequentially.
2	H. or C.	Device addressed as host or guest
3	G.	Power up cycle, during initial commissioning: device in configuration mode
	Other display	Safety lock activated. Malfunction in external conditions or in the device itself. See section 11.4 “Error and status indications on the 7-segment display” on page 135.

Tab. 29: LED indication after the power up sequence

Display					Meaning
STOP	RES	⚠	✋	✓	
●	●	●	●	○	Power-up cycle, step 1
●	○	○	○	○	Power-up cycle, step 2
●	○	○	○	○	Power-up cycle, step 3 Device status waiting for configuration or object in the protective field, OSSDs in the OFF state
Other display					Safety lock activated. Malfunction in external conditions or in the device itself (see section 11.3 “Error and status indications on the LEDs” on page 133)

Note The duration of power up depends on the volume of the configuration data and can take up to 20 seconds.

9.2 Test notes

Check the protective device as described below and in accordance with the applicable standards and regulations.

These tests are also used to identify if the protection is affected by external light sources or other unusual ambient effects.

These tests must therefore always be performed.

© SICK AG • Industrial Safety Systems • Germany • All rights reserved

9.2.1 Pre-commissioning tests

Check the protective device as described below and in accordance with the applicable standards and regulations.

WARNING

Ensure that you do not place anybody at risk during initial commissioning of the machine!

Always expect that the machine, system or the protective device does not yet behave as you have planned.

- Ensure that there are no persons in the hazardous area during initial commissioning.
- Check the effectiveness of the protective device mounted to the machine, using all selectable operating modes as specified in the checklist in the annex (see section 14.2 “Checklist for the manufacturer” on page 168).
- Ensure that the operating personnel of the machine protected by the safety laser scanner are correctly instructed by qualified safety personnel before being allowed to operate the machine. Instructing the operating personnel is the responsibility of the machine owner.
- Ensure that the adhesive label **Important information**, which is included with the safety laser scanner on delivery, is affixed to the machine in a place where it is clearly visible for the operators. Ensure that the operators have the possibility to perform this daily check correctly.
- The annex to this document includes a checklist for review by the manufacturer and OEM. Use this checklist as a reference before commissioning the system for the first time (see section 14.2 “Checklist for the manufacturer” on page 168).
- Document the adjustment of the scanner and the results of the testing during initial commissioning in a traceable manner. For this purpose also print out the complete configuration of the scanner (including protective field shapes) and include these with the documentation.

Recommendation

- Use the **Create development dump...** function in the CDS (right click on the COM interface to which the safety laser scanner is connected). You can keep these data as a backup and in this way document the state during initial commissioning at any time.

Note

SICK AG can perform the testing prior to initial commissioning for you.

9.2.2 Regular inspection of the protective device by qualified safety personnel

- Check the system following the inspection intervals specified in the national rules and regulations. This procedure ensures that any changes on the machine or manipulations of the protective device after the initial commissioning are detected.
- If major changes have been made to the machine or the protective device, or if the safety laser scanner has been modified or repaired, check the system again as per the checklist in the annex (see section 14.2 “Checklist for the manufacturer” on page 168).

© SICK AG • Industrial Safety Systems • Germany • All rights reserved

9.2.3 Daily testing of the protective device by a specialist or authorized personnel

The effectiveness of the protective device must be checked daily by a specialist or by authorized personnel. The test must also be performed if the operating mode is changed.

WARNING

No further operation if errors occur during the test!

If any one of the following points is not met, it is not permitted to continue to work on the machine or operate the vehicle. In this case the installation of the S3000 must be checked by qualified safety personnel (see section 9.2.2 “Regular inspection of the protective device by qualified safety personnel” on page 122).

- The test must be carried out for the relevant preset monitoring case.
- Check the mechanical installation to ensure that all mounting screws are secure and that the S3000 is properly aligned.
- Check each S3000 for visible changes such as damage, manipulation etc.
- Switch on the machine/system.
- Monitor the LEDs on each S3000.
- If at least one LED is not permanently lit when the machine/system is switched on, it is to be assumed that there is a fault in the machine or system. In this case the machine must be shut down immediately and checked by qualified safety personnel.
- Deliberately obstruct the protective field without risk to any personnel while the machine is running in order to test the protective function for the entire system.

  The LEDs of the S3000 must change from green to red and the dangerous movement must stop immediately. If the S3000, with the protective field that you are interrupting, switches the OSSDs on another S3000 or the OSSDs on an interface of the sens:Control series via EFI, then on this device the LEDs must change from green to red and the dangerous movement on the machine or system connected must come to an immediate stop.

  Repeat this test at different points in the hazardous area and on all S3000. If you discover any non-conformance of this function, the machine/system must be shut down immediately and checked by qualified safety personnel.
- For stationary applications, check that the hazardous areas marked out on the floor match the shapes of the protective fields stored in the S3000 and that any gaps are protected by additional safety measures. In the case of mobile applications, check that the moving vehicle actually stops at the protective field boundaries which are set in the S3000 and listed on the information label in the vehicle or in the configuration protocol. If you discover any non-conformance of this function, the machine/system/vehicle must be stopped immediately and checked by qualified safety personnel.

© SICK AG • Industrial Safety Systems • Germany • All rights reserved

9.3 Re-commissioning

If the S3000 has previously been commissioned, but the device replaced, the S3000 automatically reads the saved configuration from the system plug. Also pay attention to the notes in section 10.3 “Replacing the I/O module” on page 129.

After reading the configuration from the system plug, acceptance by qualified safety personnel is not necessary. However, the test in accordance with the regulations for the daily test must be performed (see section 9.2.3 on page 123).

When you place a configured S3000 (e.g. after replacement of the sensor head) back into operation, the following indications are possible:

Tab. 30: 7-segment display during and after the power up sequence on re-commissioning

Step	Display	Meaning
1	', ¯, ', ', _, ', -, .	Power-up cycle, testing the 7-segment display All segments are activated sequentially.
2	3. or 6.	Waiting for partner device on the EFI Saved configuration invalid: Devices in the configuration mode, no further steps taken
3	H. or G.	Device addressed as host or guest (only in an EFI system)
4	11 or E	Device in dual field mode or dual protective field mode Device in triple field mode
5	4. or P.	Waiting for valid inputs A device connected via EFI reports a malfunction
6	8. or 9.	Waiting for EDM Waiting for Reset
7	No display ', '. or ', ' or ¯ or -., _ or 1., 1	Device ready for operation Device ready for operation but object in the first or second protective field of the field set (in dual protective field mode) Device ready for operation but object in the first or second simultaneous protective field (in dual protective field mode) Device ready for operation but object in the protective field (in triple field mode) Device ready for operation but object in the first or second warning field (in triple field mode) Device ready for operation but object in the protective field or in the simultaneous protective field (in dual field mode)

© SICK AG • Industrial Safety Systems • Germany • All rights reserved

Step	Display	Meaning
	Other display	Safety lock activated. Malfunction in external conditions or in the device itself (see section 11.4 “Error and status indications on the 7-segment display” on page 135)

Note If the system plug has also been replaced, then the configuration must be transferred to the S3000 with the aid of the CDS. In this case acceptance by qualified safety personnel is necessary (see section 9.1 on page 120).

WARNING

In an EFI system with two safety laser scanners, set the address of one of the scanners to guest!

If the system plug has also been replaced, then re-fit the jumper between the connection terminals 7 (ERR) and 10 (A1) on a guest device (see section 6.1 “System connection” on page 96).

The jumper always defines the guest device. This jumper is never allowed to be fitted on the host device.

Tab. 31: LED indication after the power up sequence

Display					Meaning
STOP	RES	⚠	✋	✓	
●	○	●	○	○	The device is operational, object in protective field and warning field.
○	○	●	○	●	The device is operational, object in warning field.
○	○	○	○	●	The device is operational, no object in protective field and warning field.
●	●(blinking)	○	○	○	The device is operational, no object in protective field and warning field. Control switch for restart interlock or reset must be operated.
Other display					Safety lock activated. Malfunction in external conditions or in the device itself (see section 11.3 “Error and status indications on the LEDs” on page 133)

© SICK AG • Industrial Safety Systems • Germany • All rights reserved

10 Maintenance and care

WARNING

Do not make any repairs to the device!

The S3000 does not contain any repairable components. For this reason do not open the S3000 components and only replace the parts that are described in the following chapters as replaceable.

Switch the entire machine/system off line!

The machine/system could inadvertently start up while you are changing the front screen. As a matter of principle, always isolate the machine from the power supply during all work on the machine and safety laser scanner.

10.1 Cleaning the front screen

The S3000 safety laser scanner is largely maintenance-free. The front screen on the safety laser scanner should however be regularly cleaned and also if contaminated.

➢ Do not use aggressive cleaning agents.

➢ Do not use abrasive cleaning agents.

Note Static charges cause dust particles to be attracted to the front screen. You can diminish this effect by using the anti-static plastic cleaner (SICK part no. 5600006) and the SICK lens cloth (part no. 4003353) (see section 13.3 “Accessories/spare parts” on page 163).

How to clean the front screen:

➢ Use a clean and soft brush to remove dust from the front screen.

➢ Moisten the SICK optics cloth with the anti-static plastic cleaner and wipe off the front screen with the cloth.

10.2 Replacing the front screen

WARNING

Always perform a front screen calibration after the replacement of the front screen!

After the replacement of the front screen with a new front screen you must perform a front screen calibration with the aid of the CDS. In this way the new front screen on the S3000 is measured and the device made functional. Perform the front screen calibration at room temperature.

If the front screen is scratched or damaged, you must replace it. Order the replacement front screen from SICK (see section 13.3 “Accessories/spare parts” on page 163).

Notes

- The front screen on the S3000 is an optical part that must not be contaminated or scratched on replacement.
- The front screen is only allowed to be replaced by qualified safety personnel in a dust- and dirt-free environment.
- Never replace the front screen during operation as dust particles could enter the device.
- It is imperative that you avoid contamination of the inside of the front screen, e.g. with fingerprints.

© SICK AG • Industrial Safety Systems • Germany • All rights reserved

- Do not use any additional sealant for sealing the front screen, e.g. silicon, as the vapors produced may damage the optics.
- Mount the front screen as per the following instructions to ensure that the housing is sealed to IP 65.

How to replace the front screen:

➢ Disconnect the system plug and remove the S3000.

➢ Take the S3000 to a clean place (office, repair shop or similar).

➢ First clean the outside of the S3000. This prevents foreign bodies entering the device when it is opened.

➢ Removing the fixing screws ① to ⑧ for the front screen.

Fig. 90: Undo the fixing screws for the front screen

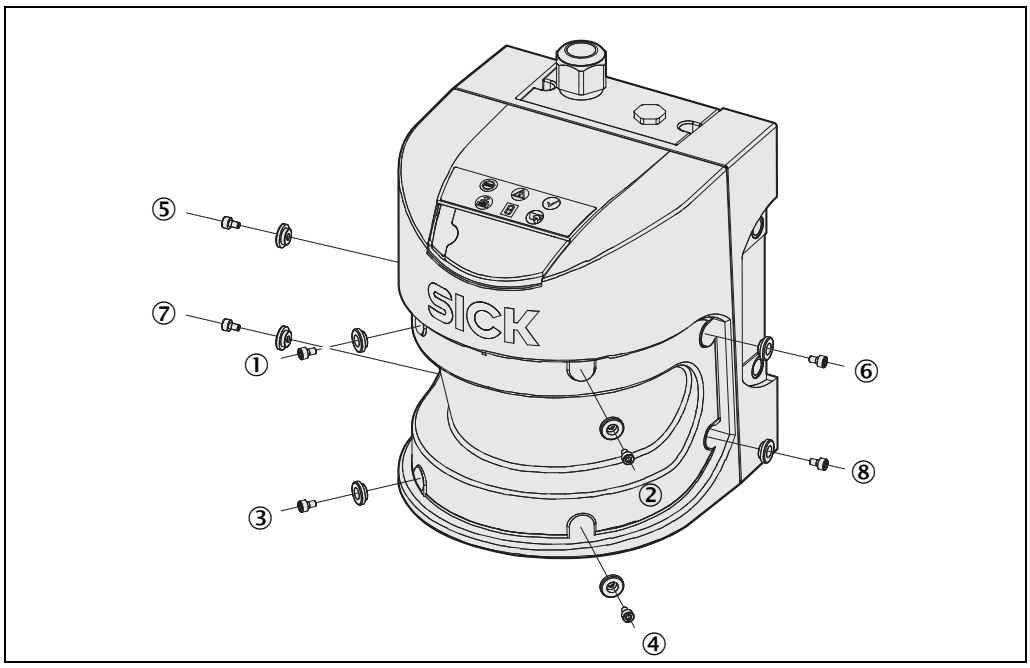

➢ Now remove the old front screen and the old rubber seal.

➢ Remove any dirt from the seal groove and the mating face on the sensor head. For this purpose if possible use a plastic cleaner that does not leave residues (see section 13.3 “Accessories/spare parts” on page 163).

Recommendation

If necessary smear a thin coating of Vaseline in the seal groove. This makes mounting easier.

➢ Insert the new seal ① — starting in the middle —. During this process first align the centre markings on the sensor head (② and ③) and seal (④ and ⑤).

Fig. 91: Inserting the rubber seal

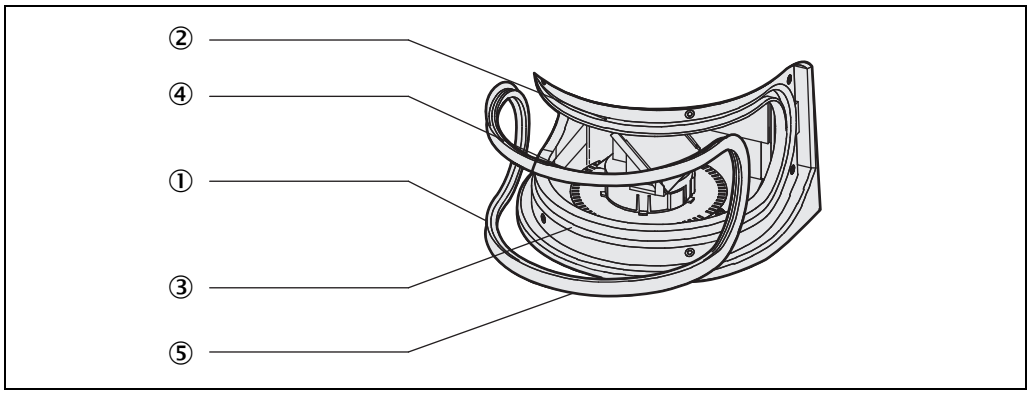

© SICK AG • Industrial Safety Systems • Germany • All rights reserved

Note If the front seal is not inserted correctly, the front screen may be damaged. Do not use any pointed or sharp tools.

- First place the seal only lightly in the rounded sections of the seal groove. In this way you will avoid stretching the seal.
- Only then press the seal home. The seal should not be stretched on insertion.

Fig. 92: Depth for pressing in the seal

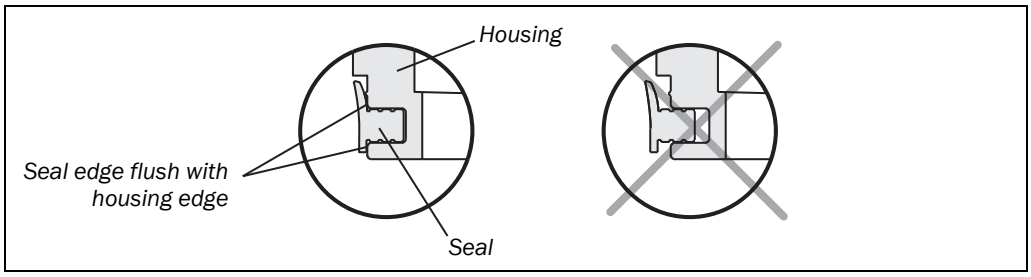

The seal is pressed in far enough when the edge of the seal and the sensor head are flush.

- It is imperative that you check that the seal is seated evenly all the way around the groove.
- Check whether the mirror on the motor is clean and remove any contamination with an optic brush.
- Set a torque wrench to 0.7 Nm (hand-tight) and have this to hand.
- Take the new front screen from the packaging.
- Remove any remnants of packaging.
- Place the front screen on the rubber seal and insert the new fixing screws ① to ④ with spacers (see Fig. 91).
- Press the front screen on the front of the cover. During this process tighten the front screws ① to ④ to the tightening torque set.
- Then insert the rest of the screws ⑤ to ⑧ with spacers (see Fig. 91), and tighten using the torque wrench.

Re-commissioning the S3000:

- Correctly re-mount the S3000 (see chapter 5 “Mounting” on page 66).
- Connect the S3000 system plug.
  After power up the S3000 automatically reads the saved configuration from the system plug (see section 9.3 “Re-commissioning” on page 124).

WARNING

Always perform a front screen calibration with the aid of the CDS after the replacement of the front screen!

The level of contamination is measured continuously during the operation of the S3000. For this purpose the front screen calibration must first be performed; this then serves as a reference for the contamination measurement (status = not contaminated).

The front screen calibration may only be performed immediately after the replacement of the front screen!

- The new front screen must be free of contamination at the time of the front screen calibration. The front screen calibration should be performed at room temperature (10-30 °C)!

© SICK AG • Industrial Safety Systems • Germany • All rights reserved

10.3 Replacing the I/O module

WARNING

Switch the entire machine/system off line!

While you are replacing the I/O module, the system may start inadvertently.

➢ As a matter of principle, always isolate the machine from the power supply during all work on the machine and safety laser scanner.

In the case of an error or to change the functionality of the S3000, you can replace the I/O module. After re-commissioning the saved configuration is read from the system plug (see also section 9.3 on page 124).

Notes

- Take into account that the saved configuration must correspond to the properties of the device used.

  You can, for example, replace an S3000 Professional with an S3000 Expert, the new device is downward compatible. You cannot, however, replace an S3000 Expert with an S3000 Professional, as there is no upward compatibility.
- If compatibility is not ensured, the 7-segment display indicates 6. The device enters a safe operational status.

Compatibility of the I/O modules with configurations in the compatibility mode

Due to the compatibility mode, there are special features in relation to the compatibility of the configurations saved in the system plug. Tab. 32 to Tab. 36 show which sensor heads are compatible with which I/O modules and which configurations.

Tab. 32: Compatibility of the Standard I/O module

I/O modules	Compatibility mode (configuration in the system plug)	Compatible	Display
Serial number < 12210000	Activated	■	None
Serial number < 12210000	Not activated	X	6
Serial number > 12210000	Activated	■	None
Serial number > 12210000	Not activated	■	None

■ = *I/O module is compatible with the configuration in the system plug*
X = *I/O module is not compatible with the configuration in the system plug*

Tab. 33: Compatibility of the Advanced I/O module

I/O modules	Compatibility mode (configuration in the system plug)	Compatible	Display
Serial number < 12210000	Activated	■	None
Serial number < 12210000	Not activated	X	6
Serial number > 12210000	Activated	■	None
Serial number > 12210000	Not activated	■	None

■ = *I/O module is compatible with the configuration in the system plug*
X = *I/O module is not compatible with the configuration in the system plug*

© SICK AG • Industrial Safety Systems • Germany • All rights reserved

Tab. 34: Compatibility of the Professional I/O module

I/O modules	Compatibility mode (configuration in the system plug)	Compatible	Display
Serial number < 12210000	Activated	■	None
Serial number < 12210000	Not activated	X	6.
Serial number > 12210000	Activated	■	None
Serial number > 12210000	Not activated	■	None

■ = *I/O module is compatible with the configuration in the system plug*
X = *I/O module is not compatible with the configuration in the system plug*

Tab. 35: Compatibility of the Remote I/O module

I/O modules	Compatibility mode (configuration in the system plug)	Compatible	Display
Serial number < 11240000	Activated	■	None
Serial number < 11240000	Not activated	X	6.
Serial number > 11240000	Activated	■	None
Serial number > 11240000	Not activated	■	None

■ = *I/O module is compatible with the configuration in the system plug*
X = *I/O module is not compatible with the configuration in the system plug*

Tab. 36: Compatibility of the Expert I/O module

I/O modules	Compatibility mode (configuration in the system plug)	Compatible	Display
All modules	Activated	■	None
All modules	Not activated	■	None

■ = *I/O module is compatible with the configuration in the system plug*

© SICK AG • Industrial Safety Systems • Germany • All rights reserved

10.3.1 Steps for replacing the I/O module

Note When the I/O module is dismantled, advanced electronic components are accessible. Protect these from electrostatic discharge, contamination and moisture.

- ➢ If possible use anti-static floor mats and workbench covers.
- ➢ When working on the S3000, touch a bare metal surface from time to time to discharge static charging of your body.
- ➢ Only remove the components of the S3000 from their anti-static packing immediately prior to installation.
- ➢ Note that no liability can be accepted for damage caused by electrostatic discharge.

Notes

- The I/O module is only allowed to be replaced by qualified safety personnel in a clean environment.
- Mount the I/O module as per the following instructions to ensure that the housing is sealed to IP 65.

How to replace the I/O module:

- ➢ Disconnect the system plug and remove the S3000.
- ➢ Take the S3000 to a clean place (office, repair shop or similar).
- ➢ First clean the outside of the S3000.
  This prevents foreign bodies entering the device when it is opened.
- ➢ Undo the fixing screws for the I/O module.
- ➢ Take hold of the I/O module with one hand at the recess for the connector to the system plug.
- ➢ With the other hand take hold of the I/O module at the dismantling aid on the underside of the device.
- ➢ Pull out the I/O module parallel to the mounting shaft.
- ➢ Remove any contamination from the sealing surface and the mating surface for the sensor head. For this purpose if possible use a plastic cleaner that does not leave residues (see section 13.3 “Accessories/spare parts” on page 163).
- ➢ Remove the I/O module from the packaging, ensure that you take adequate ESD protection measures during this process.
- ➢ Check the surfaces for cleanliness and the seal for correct seating
- ➢ Insert the I/O module in the mounting shaft parallel to the rear of the sensor head. During this process use the three surrounding sides of the shaft for orientation.
- ➢ Guide the I/O module along these surfaces to the connector. During this process slide the I/O module parallel to the rear of the sensor, avoid tilting. The I/O module can be connected without the need to apply force.
- ➢ When the I/O module is flat against the rear of the sensor head (distance approx. 1 mm), tighten the screws in stages, diagonally, to 10 to 12 Nm.

Re-commissioning the S3000:

- ➢ Correctly re-mount the S3000 (see chapter 5 “Mounting” on page 66).
- ➢ Connect the S3000 system plug.
  - – If you have replaced the I/O module for the same I/O module variant, after power up the S3000 automatically reads the saved configuration from the system plug (see section 9.3 “Re-commissioning” on page 124).
  - – If you have replaced the I/O module with a different I/O module variant (e.g. Standard with Advanced), you must perform an initial commissioning (see section 9.1 “Initial commissioning” on page 120).

© SICK AG • Industrial Safety Systems • Germany • All rights reserved

11 Diagnostics

This chapter describes how to identify and remedy errors and malfunctions during the operation of the safety laser scanner.

11.1 In the event of faults or errors

WARNING

Cease operation if the cause of the malfunction has not been clearly identified!

Stop the machine, the system or the vehicle if you cannot clearly identify or allocate an error and if you cannot safely remedy the malfunction.

Repair only by authorized persons!

The improper repair of the protective device can result in the loss of the protective function. The protective device is only allowed to be repaired by the manufacturer or persons authorized by the manufacturer.

11.2 SICK support

If you cannot rectify an error with the help of the information provided in this chapter, please contact your local SICK representative.

Make a note of the telephone number of your SICK representative so that you or other users have this number easily at hand. You will find the telephone number on the rear of these operating instructions.

Telephone number of your SICK representative

© SICK AG • Industrial Safety Systems • Germany • All rights reserved

11.3 Error and status indications on the LEDs

This section describes the meaning of the error and status indications of the LEDs and how you can respond. You will find a description of the indicators in section 3.4 “Status indicators” on page 27, the connections for the outputs in section 6.1 “System connection” on page 96.

Tab. 37: Error and status indications on the LEDs

Display	Output level	Possible cause	Rectification of the error
●	At the OSSDs	Object in the protective field, OSSDs in the OFF state	No error
●	At the OSSDs	Protective field unoccupied, OSSDs in ON state	No error
●	On the universal I/O[23]	Object in warning field[24]	No error
○ ○	OSSDs	No operating voltage, or voltage too low	➢ Check the voltage supply and activate, if necessary.
○	On the universal I/O[25]	No error	
○	On the universal I/O[25]	No supply voltage	➢ Check the voltage supply and activate, if necessary.
●	On the universal I/O[25]	Front screen contaminated, operation not guaranteed	➢ Clean the front screen.
●	On the universal I/O[25]	Front screen contaminated, still in operation	➢ Clean the front screen.
●	On the universal I/O[25]	System error	➢ Pay attention to the error display of the 7-segment display or carry out a diagnostics with the aid of the CDS. ➢ Switch off the voltage supply for the S3000 for at least 2 seconds and then switch it back on.
●	On the universal I/O[26]	Reset required	➢ Operate the control switch for restart or reset.
●	No level change	Restart delay is counting down	➢ No action is required

[23] If this is configured as warning field output.
[24] On the S3000 in the triple field mode, the 7-segment display shows which warning field contains an object.
[25] If this is configured as the output for a contamination error/warning.
[26] If this is configured as the output for “Reset required”.

© SICK AG • Industrial Safety Systems • Germany • All rights reserved

Tab. 38: Error and status indications of the LEDs in the compatibility mode

Display	Output level	Possible cause	Rectification of the error
●	At the OSSDs	Object in the protective field, OSSDs in the OFF state	No error
●	At the OSSDs	Protective field unoccupied, OSSDs in ON state	No error
●	At the warning field output	Object in warning field	No error
○ ○	At the OSSDs	No operating voltage, or voltage too low	➢ Check the voltage supply and activate, if necessary.
○	On the application diagnostic output	No error	
○	On the application diagnostic output	No supply voltage	➢ Check the voltage supply and activate, if necessary.
●	On the application diagnostic output	Front screen contaminated, operation not guaranteed	➢ Clean the front screen.
●	On the application diagnostic output 1 Hz	Front screen contaminated, still in operation	➢ Clean the front screen.
●	On the application diagnostic output 4 Hz	System error	➢ Pay attention to the error display of the 7-segment display or carry out a diagnostics with the aid of the CDS. ➢ Switch off the voltage supply for the S3000 for at least 2 seconds and then switch it back on.
●	At the Res_Req output 1 Hz	Reset required	➢ Operate the control switch for restart or reset.
●	No level change	Restart delay is counting down	➢ No action is required

© SICK AG • Industrial Safety Systems • Germany • All rights reserved

11.4 Error and status indications on the 7-segment display

This section explains the meaning of the error and status indications of the 7-segment display and how you can respond. You will find a description of the positions and symbols on the S3000 in section 3.4 “Status indicators” on page 27.

The lock-out operational status

In case of certain faults or an erroneous configuration, the device can go into the lock-out operational status. To place the device back in operation, proceed as follows:

- Rectify the cause of the fault as per Tab. 39.
- Switch off the power supply for the S3000, wait at least 3 seconds and then switch back on the power supply.

Or:

- Restart the safety laser scanner with the aid of the CDS.

Tab. 39: Error and status indications on the 7-segment display

Display	Possible cause	Rectification of the error
⊡, ⊡, ⊡, ⊡, ⊡, ⊡, ⊡, ⊡	Power-up cycle — all segments are activated sequentially.	No error
Indication of protective field and contour infringements in the dual field mode		
⊡.	Object in protective field or Surrounding contour changed[27)]	No error. The status indication eases system testing on the use of simultaneous protective fields or in an EFI system (if the OSSDs on the guest are not used, a protective field infringement is not signaled via the red LED as required in the standard).
⊡	Object in the simultaneous protective field or Surrounding contour[27)] changed	
Indication of protective field and contour infringements in the dual protective field mode		
⊡	Object in the first protective field of the field set or Surrounding contour[27)] changed	No error
⊡	Object in the second protective field of the field set or Surrounding contour[27)] changed	No error

[27)] If the contour as reference function is configured.

© SICK AG • Industrial Safety Systems • Germany • All rights reserved

Display	Possible cause	Rectification of the error
'	Object in the first protective field of the simultaneous field set or Surrounding contour[27] changed	No error
,	Object in the second protective field of the simultaneous field set or Surrounding contour[27] changed	No error
Indication of protective field and warning field infringements in the triple field mode		
¯	Object in protective field	No error
-	Object in warning field 1	No error
_	Object in warning field 2	No error
Show for all field modes		
3.	Initialization of the device Or Waiting for the end of the initialization of a second device connected to the EFI	➢ The display goes out automatically when the S3000 has been initialized and/or the connection to the second device has been made. If the display 3. does not go off: ➢ Check whether the partner device is in operation. ➢ Check the wiring. If no partner device is connected: ➢ Check the system configuration with the aid of the CDS. Transfer the corrected configuration to the S3000 again.

© SICK AG • Industrial Safety Systems • Germany • All rights reserved

Display	Possible cause	Rectification of the error
4	Waiting for valid input signals	➢ The indication extinguishes automatically if an input signal is present that corresponds to the configured evaluation type (1-of--n or complementary). If the display 4 does not go off: ➢ Check the wiring. ➢ Check the control signals for correct switching behavior. ➢ Check, if velocity ranges are used for monitoring case switching, whether the EFI status information **Speed valid** is transferred (see Tab. 43 on page 158). ➢ Check the system configuration with the aid of the CDS. Transfer the corrected configuration to the S3000 again.
6	Waiting for configuration or configuration not completed	➢ The display goes off automatically once the configuration has been successfully transferred. If the display 6 does not go off: ➢ Check the system configuration with the aid of the CDS. Transfer the corrected configuration to the S3000 again. ➢ Check whether the configuration saved in the system plug is compatible with the S3000 (see 10.3 on page 129).
6	Waiting for restart of the device	➢ Switch off the voltage supply for the S3000 for at least 2 seconds and then switch it back on.
8 or 8	Error of the external device monitoring (EDM)	➢ Check whether the contactors are working correctly or if they are wired incorrectly and rectify any error. ➢ Additionally, when 8 is displayed: Switch off the device and wait at least 3 seconds, then switch back on the power supply.
9	Error in the control switch for restart or reset	➢ Check the functionality of the control switch. The button may be defective or stuck. ➢ Check the wiring of the control switch for short-circuit to 24 V.
d ⟲ 1	Velocity tolerance exceeded: The difference between the velocities measured by the incremental encoders is too large.	➢ Check the incremental encoders. ➢ Check the configuration of the incremental encoder inputs with the aid of the CDS.

© SICK AG • Industrial Safety Systems • Germany • All rights reserved

Display	Possible cause	Rectification of the error
d. ↻ 2.	Direction of movement output by the incremental encoders is different.	➢ Check the wiring of the incremental encoder inputs, e.g. for incorrect pin assignments.
d. ↻ 3.	Maximum frequency at input INC1 exceeded	➢ Check the incremental encoders. ➢ Check the configuration of the incremental encoder inputs with the aid of the CDS. ➢ Check whether the permitted maximum velocity of the vehicle is exceeded!
d. ↻ 4.	Maximum frequency at input INC2 exceeded Or The monitored speed threshold has been exceeded.	➢ Check the incremental encoders. ➢ Check the configuration of the incremental encoder inputs with the aid of the CDS. ➢ Check whether the permitted maximum velocity of the vehicle is exceeded! ➢ Check the limit velocity configured in the related monitoring cases.
E. ↻ 1.	Sensor head faulty	➢ Switch off the voltage supply of the S3000 for at least 2 s and then switch it back on. If the display does not go off: ➢ Send the sensor head, the I/O module or the system plug to the manufacturer for repair.
E. ↻ 2.	I/O module faulty	
E. ↻ 3.	Configuration memory in the system plug faulty	
E. ↻ 4.	A second device which is connected via EFI is faulty.	➢ Check the connected device and the connection.
F. ↻ 1.	Overcurrent on OSSD connection 1	➢ Check the switching element connected (contactor, relay). Replace, if necessary. ➢ Check the wiring for short-circuit to 0 V.
F. ↻ 2.	Short-circuit to 24 V at OSSD connection 1	➢ Check the wiring for short-circuit to 24 V.
F. ↻ 3.	Short-circuit to 0 V at OSSD connection 1	➢ Check the wiring for short-circuit to 0 V.
F. ↻ 4.	Overcurrent on OSSD connection 2	➢ Check the switching element connected (contactor, relay). Replace, if necessary. ➢ Check the wiring for short-circuit to 0 V.
F. ↻ 5.	Short-circuit to 24 V at OSSD connection 2	➢ Check the wiring for short-circuit to 24 V.
F. ↻ 6.	Short-circuit to 0 V at OSSD connection 2	➢ Check the wiring for short-circuit to 0 V.
F. ↻ 7.	Short-circuit between OSSD connection 1 and 2	➢ Check the wiring and rectify the error.
F. ↻ 9.	General OSSD wiring error	➢ Check the complete wiring of the OSSDs.

© SICK AG • Industrial Safety Systems • Germany • All rights reserved

Display	Possible cause	Rectification of the error
G.	Device is addressed as guest	No error. The symbol is displayed for approx. 2 seconds on switching on a device that is addressed as a guest.
H.	Device is addressed as host	No error. The symbol is displayed for approx. 2 seconds on switching on a device that is addressed as a host.
1. ↻ 1.	The S3000 is receiving no measured values within a range of at least 90° (measuring range maximum 49 m), it thus is not detecting any obstacles such as e.g. building walls.	➢ For the correct function of the safety laser scanner, always ensure that measured values are received within a range of 90°; this range can be moved as required within the scan range.
1. ↻ 2.	Device is dazzled	➢ Check whether the S3000 is being dazzled by an external light source, e.g. headlight, infrared light sources, stroboscopic light, sun etc. ➢ If necessary, re-mount the device.
1. ↻ 3.	Temperature error. The operating temperature of the S3000 has exceeded the permissible range.	➢ Check whether the S3000 is operated as per the permissible ambient conditions.
L. ↻ 2.	Invalid configuration of the EDM	➢ Verify that the machine-side EDM is connected correctly.
L. ↻ 4.	The addresses of both the host device and the guest device may have been set to guest. A device connected via EFI or the connection to the device is defective or disrupted.	➢ Disconnect the connection to the host device (see section 6.1.1 on page 97) ➢ Check the connected device and the connection to this device.

© SICK AG • Industrial Safety Systems • Germany • All rights reserved

Display	Possible cause	Rectification of the error
L. ↻ 9.	There is a short-circuit between the reset input and another input or output, or the reset pulse does not comply with the requirements.	➢ Check the wiring for cross-circuits. Or: ➢ Check whether the reset pulse complies with the requirements (see Fig. 96 on page 143).
n. ↻ 1.	Input signal for an undefined monitoring case	➢ Check the path of the vehicle. Or: ➢ Check the operating process of the monitored machine or system. ➢ If necessary, check the configuration of the monitoring cases with the aid of the CDS.
n. ↻ 2.	Incorrect sequence on switching the monitoring cases	
n. ↻ 3.	Incorrect operation of the control inputs	➢ Check the operation of the digital control inputs.
n. ↻ 4.	Short-circuit on control inputs A1/2 or incorrect operation of A1/2 via EFI	➢ Check the wiring, the digital control inputs or the wiring to the devices connected via EFI.
n. ↻ 5.	Short-circuit on control inputs B1/2 or incorrect operation of B1/2 via EFI	
n. ↻ 6.	Short-circuit on control inputs C1/2 or incorrect operation of C1/2 via EFI	
n. ↻ 7.	Short-circuit on control inputs D1/2 or incorrect operation of D1/2 via EFI	
n. ↻ 8.	Incorrect operation of E1/2 via EFI	
o.	Park/stand-by mode (see section 4.10.7 on page 64); the OSSDs are in the OFF state; the laser is deactivated.	No error. Readiness is re-established by switching to a different monitoring case or withdrawing the stand-by bit via EFI.

© SICK AG • Industrial Safety Systems • Germany • All rights reserved

Display	Possible cause	Rectification of the error
P.	A device connected via EFI reports a malfunction.	➢ Carry out a fault diagnosis of the device connected with the S3000.
u.	Front screen calibration active	No error
u. ↻ 1. … 6.	Channel 1 to 6 of the contamination measurement contaminated	➢ Clean the front screen.
u. ↻ 7.	No front screen fitted or dazzling of the contamination measurement	➢ Re-fit the new front screen (then perform front screen calibration). If at the time of the error a front screen was fitted: ➢ Check whether the S3000 is being dazzled by an external light source, e.g. headlight, infrared light source, stroboscopic light, sun etc.
u. ↻ 8. and u. ↻ 9.	Traceability data incorrect or front screen calibration failed	➢ Carry out a front screen calibration or replace the S3000, if necessary.
4. ↻ 1.	Internal error in the S3000	➢ Replace the S3000.
4. ↻ 2.	Internal I/O module error	➢ Replace the I/O module.
4. ↻ 3.	I/O module/sensor head device combination invalid	➢ Check whether the correct I/O module has been used, and replace if necessary.

Note If you have problems during troubleshooting, contact SICK support. Keep a copy of the print out of the results of the diagnostics at hand.

11.5 Extended diagnostics

The CDS software supplied with the device (Configuration & Diagnostic Software) includes extended diagnostic options. It allows you to narrow down the problem if the error is non-specific or if you experience usage downtime problems. Detailed information to be found …

- in the online help for the CDS (Configuration & Diagnostic Software).
- in the user manual for the CDS.

© SICK AG • Industrial Safety Systems • Germany • All rights reserved

12 Technical specifications

12.1 Characteristics

12.1.1 Scanning range

Fig. 93: Diagram scanning range with Short Range sensor head

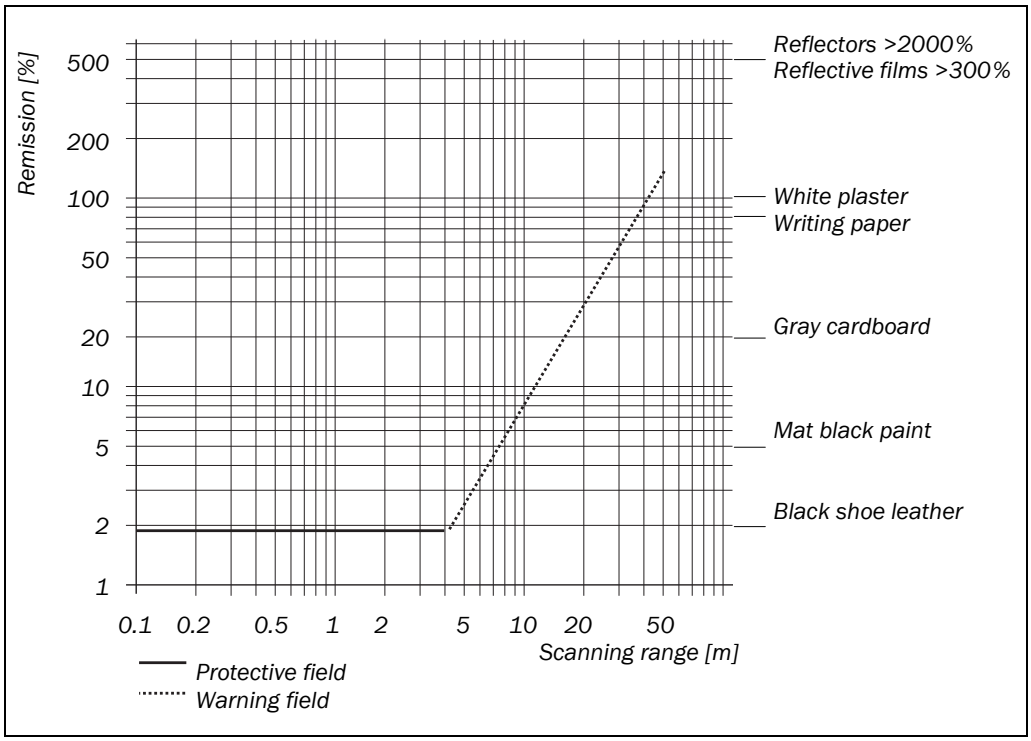

Fig. 94: Diagram scanning range with Medium Range sensor head

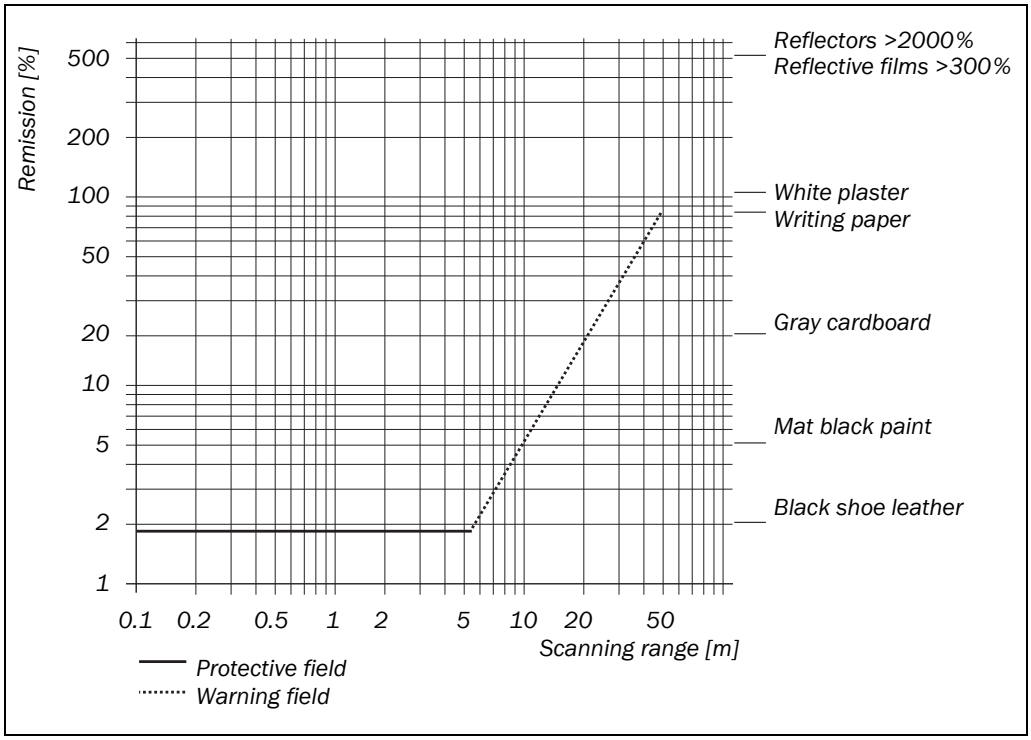

© SICK AG • Industrial Safety Systems • Germany • All rights reserved

Fig. 95: Diagram scanning range with Long Range sensor head

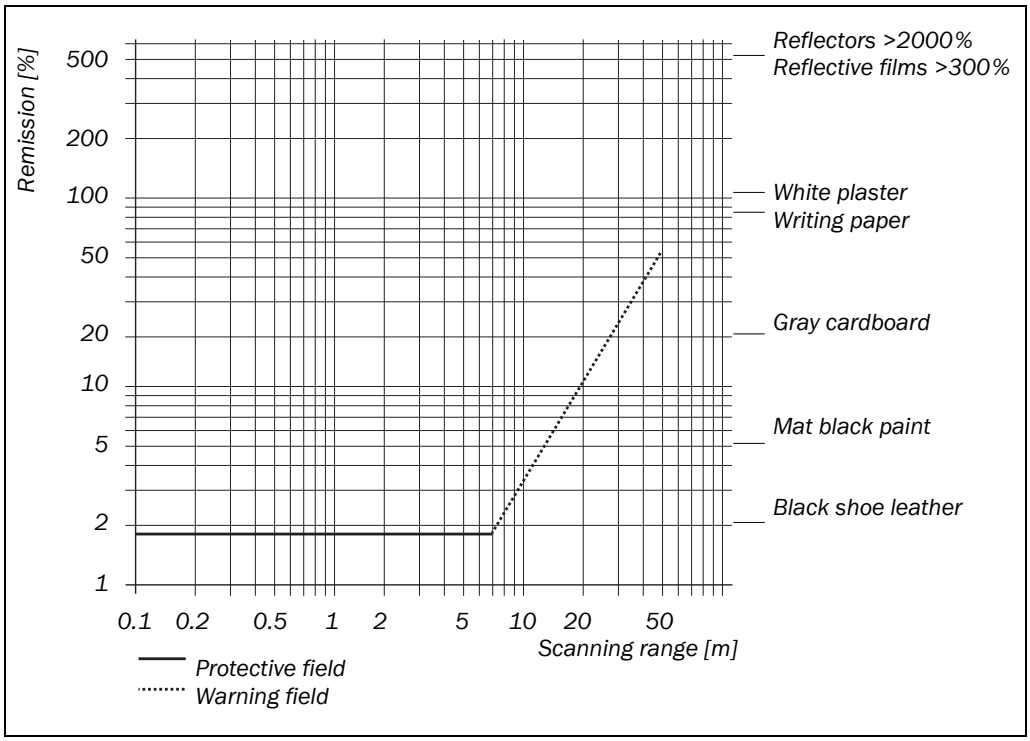

12.1.2 Reset pulse

If the reset pulse on the “Reset” input is, e.g., provided by an (F)PLC, then the pulse must be of a specific length.

Fig. 96: Reset pulse requirements

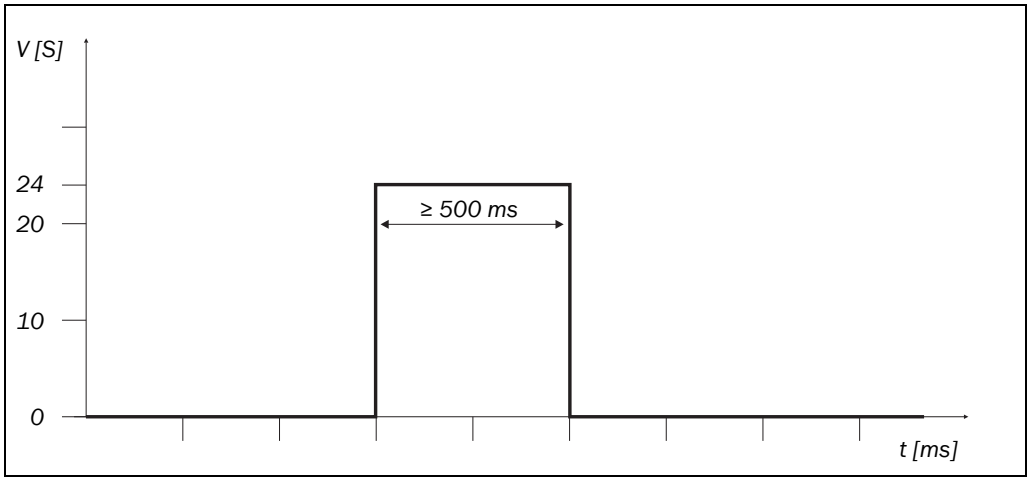

Ensure that pulses do not have a frequency of 1 Hz or 4 Hz, as otherwise there may be overlaps with the application diagnostic output signals for “Front screen contaminated” or “System error”. This overlap will result in an error on the safety laser scanner.

© SICK AG • Industrial Safety Systems • Germany • All rights reserved

12.2 OSSD response times

The total response time of your application is dependent on ...

- the basic response time at the related resolution and the maximum protective field range.
- the multiple sampling set.
- the OSSDs used.

How to calculate the total response time T_S:

$T_S = t_B + T_{MFA} + T_{EFI}$

Where ...

t_B = Basic response time (60 ms or 120 ms)

T_{MFA} = Supplement due to multiple sampling > 2

T_{EFI} = Supplement for the usage of external OSSDs via EFI

Multiple sampling

On the S3000 at least double multiple sampling is always set. From a multiple sampling of 3 you must add a supplement to the response time. The related supplement is dependent on the basic response time and the multiple sampling.

Tab. 40: Supplements for multiple sampling

Multiple sampling	Supplement for basic response time 60 ms	Supplement for basic response time 120 ms
3 times	30 ms	60 ms
4 times	60 ms	120 ms
5 times	90 ms	180 ms
6 times	120 ms	240 ms
7 times	150 ms	300 ms
8 times	180 ms	360 ms
9 times	210 ms	420 ms
10 times	240 ms	480 ms
11 times	270 ms	540 ms
12 times	300 ms	600 ms
13 times	330 ms	660 ms
14 times	360 ms	720 ms
15 times	390 ms	780 ms
16 times	420 ms	840 ms

External OSSDs

Note If you use the OSSDs on another device via EFI as external output signal switching devices (for example with two S3000 connected together), the response time increases by 20 ms in each case.

© SICK AG • Industrial Safety Systems • Germany • All rights reserved

12.3 Timing behavior of the OSSDs

The S3000 tests the OSSDs immediately after switch on and then at regular intervals. For this purpose the S3000 briefly switches off both OSSDs (for 300 µs) and checks whether the channels are electrically isolated during this period.

Note Ensure that the input electronics on your machine or system do not react to this test pulse and therefore shut down the machine or system.

Fig. 97: Diagram of the test pulse at the OSSDs

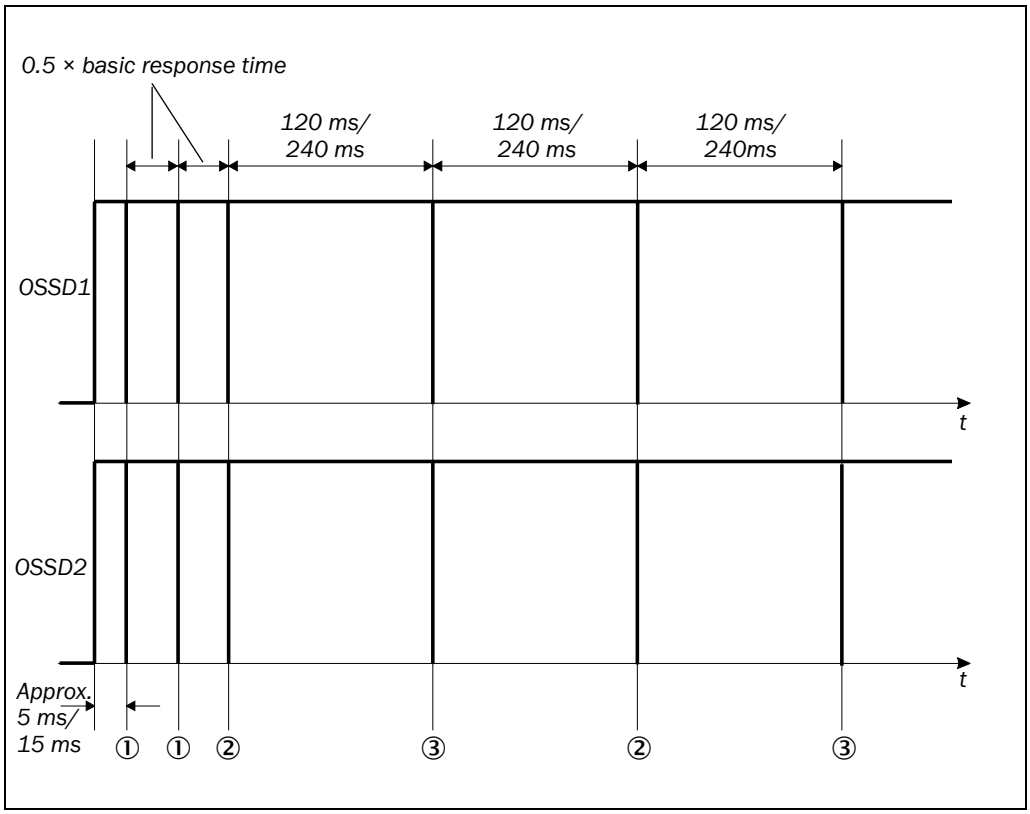

Approx. 5 or 15 ms[28)] after the switching on of the OSSDs, the S3000 performs the first voltage test and then after a half basic response time a second voltage test.

After a further half basic response time of the S3000 there is a shut-down test ②, 120 or 240 ms[28)] later a further voltage test ③. Then the S3000 performs a shut-down test and a voltage test alternately at an interval of 120 ms or 240 ms[28)]. Fig. 98, Fig. 99 and Fig. 100 show the pulse duration for the individual tests.

[28)] At 0.5° or 0.25° angular resolution.

© SICK AG • Industrial Safety Systems • Germany • All rights reserved

Fig. 98: Voltage test after switching on the OSSDs

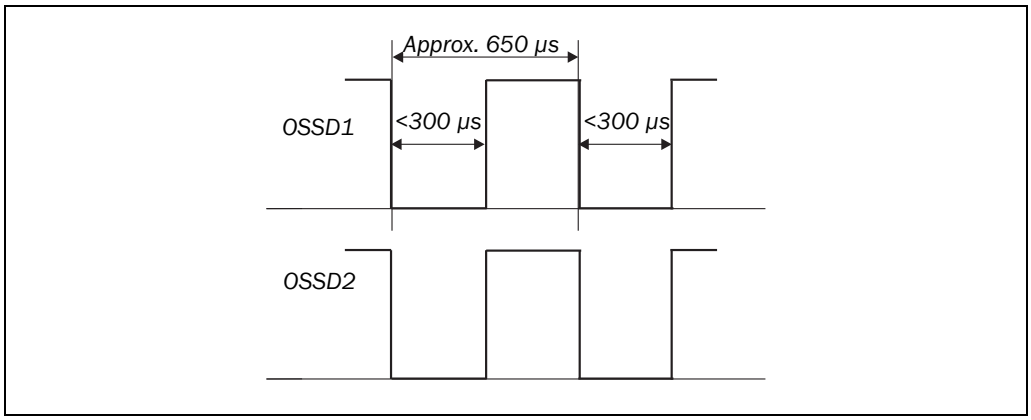

Fig. 99: Shut-down test

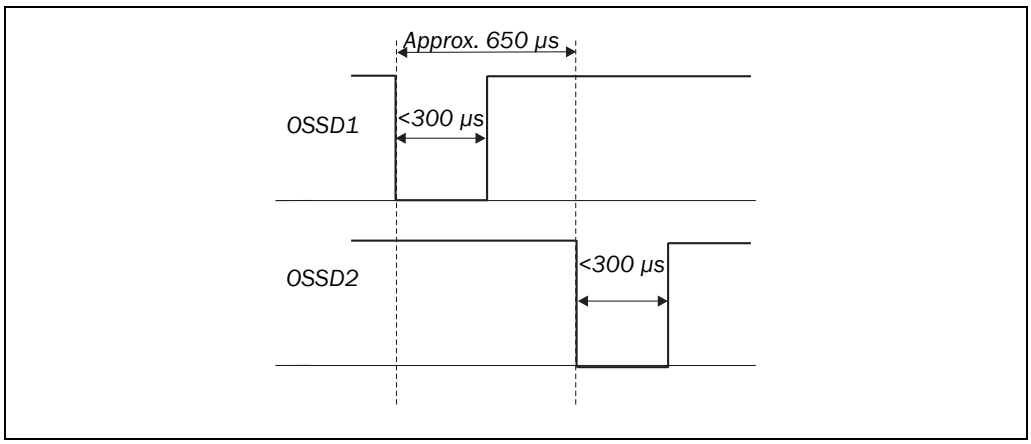

Fig. 100: Voltage test

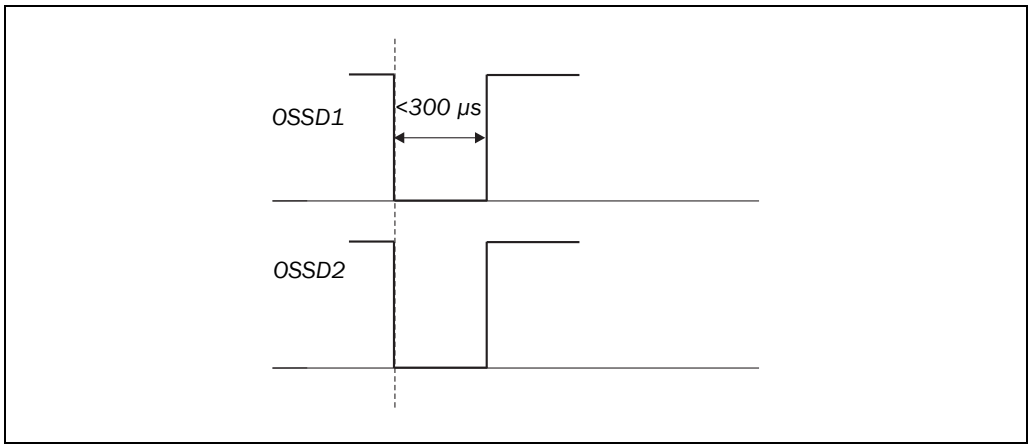

© SICK AG • Industrial Safety Systems • Germany • All rights reserved

12.4 Data sheet

Tab. 41: Data sheet S3000

	Minimum	Typical	Maximum
General data			
Type	Type 3 (IEC 61496-1)		
Safety Integrity Level[29)]	SIL2 (IEC 61508)		
SIL claim limit[29)]	SILCL2 (EN 62061)		
Category	Category 3 (EN ISO 13849-1)		
Performance Level	PL d (EN ISO 13849-1)		
PFHd (T_{amb} = 25 °C) (mean probability of a dangerous failure per hour)			8×10^{-8}
T_M (mission time)	20 years (EN ISO 13849)		
Laser protection class	Laser class 1 (according to IEC 60825-1 as well as CDRH 21 CFR 1040.10 and 1040.11; excluded are deviations due to Laser Notice No. 50, dated 24.06.2007)		
Enclosure rating	IP 65 (EN 60529)		
Protection class	II (EN 50178)[30)]		
Operating temperature range	–10 °C		+50 °C
Storage temperature range	–25 °C –25 °C		+50 °C +70 °C (≤24 h)
Humidity (taking into account the operating temperature range)	IEC 61496-1, section 5.1.2 and 5.4.2, as well as IEC 61496-3, section 5.4.2		
Vibration	IEC 61496-1, section 5.1.2 and 5.4.4.1, as well as IEC 61496-3, section 5.4.4.2		
Frequency range	10 Hz		150 Hz
Amplitude	0.35 mm or 5 g		
Shock resistance	IEC 61496-1 as well as IEC 61496-3		
Single shock	15 g, 11 ms (EN 60068-2-27)		
Continuous shock	10 g, 16 ms		

29) For detailed information on the safety design of your machine/system, please contact your local SICK representative.
30) Safety extra-low voltage SELV/PELV.

© SICK AG • Industrial Safety Systems • Germany • All rights reserved

	Minimum	Typical	Maximum
Sender	Pulsed laser diode		
Wavelength	880 nm	905 nm	935 nm
Divergence of the collimated beam		2.5 mrad	
Pulse duration			3.1 ns
Average output power			562 µW
Size of light spot at the front screen		12 mm	
Size of the light spot at 4.0 m scanning range		23 mm	
Size of the light spot at 5.5 m scanning range		27 mm	
Size of the light spot at 7.0 m scanning range		32 mm	
Housing			
Material	Aluminium die-cast		
Color	RAL 1021 (rapeseed yellow)		
Front screen			
Material	Polycarbonate		
Surface finish	Outside with scratch-resistant coating		
System plug	ESD protected		
Dimensions S3000[31)]			
Height			185 mm
Width			155 mm
Depth			160 mm
Total weight		3.3 kg	

Functional data

Resolution	30, 40, 50, 70, 150 mm		
Protective field of the sensor head with 4.0 m scanning range[32)] at 120 ms response time			
At 30 mm resolution			2.80 m
At 40 mm resolution			3.80 m
At 50 mm resolution			4.00 m
At 70 mm resolution			4.00 m
At 150 mm resolution			4.00 m

31) Without projection of cable glands with system plug mounted.
32) Radial distance to the safety laser scanner.

© SICK AG • Industrial Safety Systems • Germany • All rights reserved

	Minimum	Typical	Maximum
Protective field of the sensor head with 4.0 m scanning range at 60 ms response time			
At 30 mm resolution			1.90 m
At 40 mm resolution			2.60 m
At 50 mm resolution			3.30 m
At 70 mm resolution			4.00 m
At 150 mm resolution			4.00 m
Protective field of the sensor head with 5.5 m scanning range at 120 ms response time			
At 30 mm resolution			2.80 m
At 40 mm resolution			3.80 m
At 50 mm resolution			4.80 m
At 70 mm resolution			5.50 m
At 150 mm resolution			5.50 m
Protective field of the sensor head with 5.5 m scanning range at 60 ms response time			
At 30 mm resolution			1.90 m
At 40 mm resolution			2.60 m
At 50 mm resolution			3.30 m
At 70 mm resolution			4.70 m
At 150 mm resolution			5.50 m
Protective field of the sensor head with 7 m scanning range at 120 ms response time			
At 30 mm resolution			2.80 m
At 40 mm resolution			3.80 m
At 50 mm resolution			4.80 m
At 70 mm resolution			7.00 m
At 150 mm resolution			7.00 m
Protective field of the sensor head with 7 m scanning range at 60 ms response time			
At 30 mm resolution			1.90 m
At 40 mm resolution			2.60 m
At 50 mm resolution			3.30 m
At 70 mm resolution			4.70 m
At 150 mm resolution			7.00 m
Scan angle			190° (–5° to +185°)
Remission	1.8%		Several 1000% (reflectors)
Angular resolution	0.5°		0.25°

© SICK AG • Industrial Safety Systems • Germany • All rights reserved

	Minimum	Typical	Maximum
Protective field supplement generally necessary			100 mm
Supplement for retroreflectors in scan plane at a distance of less than 1 m to the protective field boundary			200 mm
Measurement error for measured data error output up to 5.5 m and 1.8 % remission			
Systematic error		±5 mm	
Statistical incl. systematic errors			
at 1 σ		±24 mm	
at 2 σ		±43 mm	
at 3 σ		±62 mm	
at 4 σ		±80 mm	
at 5 σ		±99 mm	
Evenness of the scan field at 5.5 m			±70 mm
Evenness of the scan field at 7 m			±88 mm
Distance from mirror axis of rotation (zero point on the X and Y axis) to the rear of the device	93 mm		
Distance between centre of the scan plane and the bottom edge of the housing	63 mm		
Warning field range (radial)		Approx. 20 m[33]	49 m
Distance measuring range			49 m
Number of multiple samplings (configurable via CDS)	2		16
Power-up delay		9 s	20 s
Restart after (configurable)	2 s		60 s

Electrical data

Supply voltage (SELV)[34][35]	16.8 V	24 V	28.8 V
Permissible residual ripple[36]			±5 %
Switch on current[37]			2 A
Operating current without output load[38]		0.6 A	0.8 A
Operating current with max. output load, without load due to incremental encoders[38]		2.2 A	2.3 A

[33] For objects with 20 % reflectivity.
[34] Operation only in a short-circuit protected system with max. 8 A.
[35] To meet the requirements of the relevant product standards (e.g. IEC 61496-1), the external voltage supply for the devices must be able to bridge a brief mains failure of 20 ms. Power supplies according to EN 60204-1 satisfy this requirement. Suitable power supplies are available as accessories from SICK.
[36] The absolute voltage level must not drop below the specified minimum voltage.
[37] The load currents for the input capacitors are not taken into account.
[38] With a typical supply voltage of 24 V.

© SICK AG • Industrial Safety Systems • Germany • All rights reserved

	Minimum	Typical	Maximum
Operating current with max. output load, with max. load allowed due to incremental encoders[38)]		2.4 A	2.6 A
Power consumption without output load[38)]		14 W	19 W
Power consumption with maximum output load, without load due to incremental encoders[38)]		53 W	55 W
Power consumption with maximum output load, with max. load allowed due to incremental encoders[38)]		58 W	62 W
Power consumption in the stand-by mode or park mode without output load		14 W	19 W
Electrical connection	Plug-in connection housing with screw terminal connections		
Technical specifications, screw terminals			
Cross-section of rigid cores	0.14 mm²		1.5 mm²
Cross-section of flexible cores[39)]	0.14 mm²		1.0 mm²
American Wire Gauge (AWG)	26		16
Insulation stripping length for the cores		5 mm	
Screw tightening torque	0.22 Nm		0.25 Nm
Cable length for power supply tolerance ±10 %			
For wire cross-section 1 mm²			50 m
For wire cross-section 0.5 mm²			25 m
For wire cross-section 0.25 mm²			12 m
Cable length for power supply tolerance ±5 %			
For wire cross-section 1 mm²			60 m
For wire cross-section 0.5 mm²			30 m
For wire cross-section 0.25 mm²			15 m
Cable length for power supply tolerance ±1 %			
For wire cross-section 1 mm²			70 m
For wire cross-section 0.5 mm²			35 m
For wire cross-section 0.25 mm²			17 m
Input for control switch for restarting or resetting			
Input resistance when HIGH		2 kΩ	
Voltage for HIGH	11 V	24 V	28.8 V
Voltage for LOW	–3 V	0 V	5 V
Input capacitance		15 nF	
Static input current	6 mA		15 mA
Duration of actuation of the control switch	120 ms		

[39)] Core terminating sleeves are not required.

© SICK AG • Industrial Safety Systems • Germany • All rights reserved

	Minimum	Typical	Maximum
Input EDM			
Input resistance when HIGH		2 kΩ	
Voltage for HIGH	11 V	24 V	28.8 V
Voltage for LOW	–3 V	0 V	5 V
Input capacitance		15 nF	
Static input current	6 mA		15 mA
Response time at EDM after switching on the OSSDs			300 ms
Static control inputs			
Input resistance when HIGH		2 kΩ	
Voltage for HIGH	11 V	24 V	28.8 V
Voltage for LOW	–3 V	0 V	5 V
Input capacitance		15 nF	
Static input current	6 mA		15 mA
Input frequency (switching sequence, max. or frequency)	$1/t_{UFVz}$ + half basic response time (t_{UFVz} = Time set for advancing the timing for the switching)		
Dynamic control inputs			
Input resistance when HIGH		2 kΩ	
Voltage for HIGH	11 V	24 V	28.8 V
Voltage for LOW	–3 V	0 V	5 V
Input capacitance		1 nF	
Static input current	6 mA		15 mA
Duty cycle (Ti/T)		0.5	
Input frequency			100 kHz
Voltage supply for incremental encoders			
24 V voltage output HIGH	V_S – 3 V		V_S
Current load		50 mA	100 mA

© SICK AG • Industrial Safety Systems • Germany • All rights reserved

	Minimum	Typical	Maximum
OSSDs			
Output signal switching device pair	2 PNP semiconductors, short-circuit protected[40], cross-circuit monitored		
Safe state in case of an error	At least one OSSD is in the OFF state.		
HIGH switching voltage at 500 mA	V_S – 2.7 V		V_S
Switching voltage LOW	0 V	0 V	3.5 V
Source switching current	6 mA	0.2 A	0.5 A
Leakage current[41]			250 µA
Load inductance[42]			2.2 H
Load capacity			2.2 µF at 50 Ω
Switching sequence (without switching and without simultaneous monitoring)	Depending on load inductance		
Permissible cable resistance[43]			2.5 Ω
Test pulse width[44]		230 µs	300 µs
Test frequency at 0.5° angular resolution At 0.25° angular resolution		 120 ms 240 ms	
Power-up delay of the OSSDs from red to green		120 ms	
Time offset on switching the OSSDs between OSSD2 and OSSD1		1.3 ms	2 ms

40) Applies to the voltage range between V_S and 0 V.

41) In the case of a fault (0 V cable open circuit) maximally the leakage current flows in the OSSD cable. The downstream controller must detect this status as LOW. A FPLC (fail-safe programmable logic controller) must be able to identify this status.

42) The maximum rated load inductance is higher with lower switching sequence.

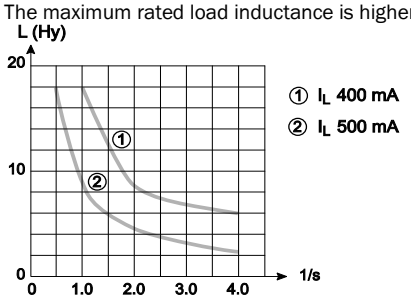

43) Make sure to limit the individual line core resistance to the downstream controller to this value to ensure that a cross-circuit between the outputs is safely detected. (Also note EN 60 204-1.)

44) When active, the outputs are tested cyclically (brief LOW). When selecting the downstream controllers, make sure that the test signals do not result in deactivation.

© SICK AG • Industrial Safety Systems • Germany • All rights reserved

	Minimum	Typical	Maximum
UNI-I/O1, 2 and 3			
HIGH switching voltage at 200 mA	V_S – 3.3 V		V_S
Source switching current		100 mA	200 mA
Current limiting (after 5 ms at 25 °C)	600 mA		920 mA
Power up delay		1.4 ms	2 ms
Switch off delay		0.7 ms	2 ms
Response time of the application diagnostic output or UNI-I/O1, 2 and 3 on configuration as warning field output	Corresponds to the resulting response time of the OSSDs plus supplement		
Supplement for 0.25° angular resolution		50 ms	
Supplement for 0.5° angular resolution		25 ms	
Incremental encoders that can be evaluated			
Type	Two-channel rotary encoder with 90° phase offset		
Enclosure rating	IP 54		
Supply voltage		24 V	
Outputs required on the incremental encoders	Push/pull		
Pulse frequency			100 kHz
Number of pulses per cm	50		1000
Cable length (screened)			10 m
Configuration and diagnostics interface			
Communication protocol	RS-232 (proprietary)		
Transmission speed	9600 Baud 19 200 Baud 38 400 Baud		
Cable length at 9600 Baud and 0.25 mm² cables			15 m
Galvanic isolation	No		
Output TxD HIGH	5 V		15 V
Output TxD LOW	–15 V		–5 V
Voltage range RxD	–15 V		15 V
Switching threshold RxD LOW	–15 V		0.4 V
Switching threshold RxD HIGH	2.4 V		15 V
Short-circuit current at TxD	–60 mA		60 mA
Max. voltage level at RxD	–15 V		15 V
Max. voltage level at TxD	–11 V		11 V

© SICK AG • Industrial Safety Systems • Germany • All rights reserved

	Minimum	Typical	Maximum
Data interface			
Communication protocol	RS-422 (proprietary)		
Transmission speed (selectable)	9600 Baud 19 200 Baud 38 400 Baud 125 kBaud 250 kBaud 500 kBaud		
Cable length at 500 kBaud and 0.25 mm² cables			100 m
Galvanic isolation	Yes		
Differential output voltage at the sender (between TxD+ and TxD–) with 50 Ω load	±2 V		±5 V
Differential input threshold at the receiver (between RxD+ and RxD–)	±0.2 V		
Short-circuit current at TxD+, TxD–	–250 mA		250 mA
Max. voltage level at TxD+, TxD–	–29 V		29 V
Max. voltage level at RxD+, RxD–	–29 V		29 V
Terminating resistance	115 Ω	120 Ω	125 Ω
Type of connecting cable	Twisted pairs with copper braid screen		
Characteristic impedance of the connecting cable	80 Ω	100 Ω	115 Ω
Wire cross-section of the connecting cable	0.25 mm²		0.6 mm²
EFI — safe SICK device communication			
Cable length at 500 kBaud and 1 × 2 × 0.22 mm² cables			50 m
Galvanic isolation	Yes		
Type of connecting cable	Twisted pairs with copper braid screen, cable diameter ≤ 6.8 mm		
Wire cross-section of the connecting cable	1 × 2 × 0.22 mm²		

© SICK AG • Industrial Safety Systems • Germany • All rights reserved

12.5 EFI status information and control commands

If devices are connected together via EFI, EFI status information and control commands are exchanged. Tab. 42 and Tab. 43 shows the status information that can be retrieved and the possible control commands for the S3000.

Notes

- The information in square brackets reflects the names used in the CDS and in the Flexi Soft Designer.
- If the devices are operated in the compatibility mode, then restricted EFI status information and control commands are available.

Tab. 42: Status information of the S3000 (data from the S3000)

Status information	Meaning/effect
OSSD on [OSSD]	• Logical 1, if the internal OSSD of the S3000 is in the ON state (green) • Logical 0, if the OSSD of the S3000 is in the OFF state (red)
Warning field bit [WF LED]	• Logical 1, if warning field 1 and warning field 2 of the S3000 are free or not used
Contamination [Weak]	• Logical 1, if the front screen is contaminated
Reset required [Res. Req]	• Logical 1, if reset required
Reset button pressed [Res. Pressed]	• Logical 1, if the reset button is pressed on the S3000
I/O error [I/O Error]	• Logical 0, if there is no error on the S3000 • Logical 1, if there is an error on the S3000
Control input A1 [In A1]	• Logical 1, if the connection of control input A1 is HIGH[45)]
Control input A2 [In A2]	• Logical 1, if the connection of control input A2 is HIGH[45)]
Control input B1 [In B1]	• Logical 1, if the connection of control input B1 is HIGH[45)]
Control input B2 [In B2]	• Logical 1, if the connection of control input B2 is HIGH[45)]
Control input C1 [In C1]	• Logical 1, if the connection of control input C1 is HIGH[45)]
Control input C2 [In C2]	• Logical 1, if the connection of control input C2 is HIGH[45)]
Control input D1 [In D1]	• Logical 1, if the connection of control input D1 is HIGH[45)]
Control input D2 [In D2]	• Logical 1, if the connection of control input D2 is HIGH[45)]

[45)] Only if the inputs are activated in the CDS.

© SICK AG • Industrial Safety Systems • Germany • All rights reserved

Status information	Meaning/effect
Allocated protective field unoccupied [PF]	• In dual field mode, in dual protective field mode and in triple field mode: Logical 1, if the active allocated protective field is unoccupied
Allocated warning field unoccupied [WF] or allocated protective field 2 unoccupied [PF2]	• In dual field mode: Logical 1, if the active allocated warning field is unoccupied • In dual protective field mode: Logical 1, if the active allocated protective field 2 is unoccupied • In triple field mode: Logical 1, if the active allocated warning field is unoccupied
Simultaneous protective field unoccupied [Sim. PF]	• In dual field mode and in dual protective field mode: Logical 1, if the simultaneously monitored protective field is unoccupied • In triple field mode: no function
Simultaneous warning field unoccupied [Sim. WF] or simultaneous protective field 2 unoccupied [Sim. PF2] or allocated warning field 2 unoccupied [WF2]	• In dual field mode: Logical 1, if the simultaneously monitored warning field is unoccupied • In dual protective field mode: Logical 1, if the simultaneously monitored protective field 2 is unoccupied • In triple field mode: Logical 1, if the active allocated warning field 2 is unoccupied
Speed valid[46)]	• Logical 1, if a valid velocity is present on the incremental encoder inputs • Logical 0, if an invalid velocity is present on the incremental encoder inputs
Speed[46)]	• 12 bits for the transmission of the velocity 100000110000 = –2000 cm/s 000000000000 = 0 cm/s 011111010000 = +2000 cm/s

[46)] Not in the compatibility mode.

© SICK AG • Industrial Safety Systems • Germany • All rights reserved

Tab. 43: Control features on the S3000 (data to the S3000)

Control feature	Meaning/effect
Static input information A1 [In A1]	• Logical 1, stimulates control input A1 of the S3000
Static input information A2 [In A2]	• Logical 1, stimulates control input A2 of the S3000
Static input information B1 [In B1]	• Logical 1, stimulates control input B1 of the S3000
Static input information B2 [In B2]	• Logical 1, stimulates control input B2 of the S3000
Static input information C1 [In C1]	• Logical 1, stimulates control input C1 of the S3000
Static input information C2 [In C2]	• Logical 1, stimulates control input C2 of the S3000
Static input information D1 [In D1]	• Logical 1, stimulates control input D1 of the S3000
Static input information D2 [In D2]	• Logical 1, stimulates control input D2 of the S3000
Static input information E1 [In E1][47)]	• Logical 1, stimulates control input E1 of the S3000
Static input information E2 [In E2][47)]	• Logical 1, stimulates control input E2 of the S3000
Stand-by[47)]	• Logical 1, stimulates operational status Stand-by (individually for host and guest)
Speed valid[47)]	• Logical 1, valid velocity is present on the incremental encoder inputs • Logical 0, invalid velocity is present on the incremental encoder inputs
Speed[47)]	• 12 bits for the transmission of the velocity 100000110000 = –2000 cm/s 000000000000 = 0 cm/s 011111010000 = +2000 cm/s
I/O error [I/O Error]	• Logical 0, if there is no error on the connected partner device • Logical 1, if there is an error on the connected partner device

[47)] Not in the compatibility mode.

© SICK AG • Industrial Safety Systems • Germany • All rights reserved

12.6 Dimensional drawings

12.6.1 S3000

Fig. 101: Dimensional drawing S3000 (mm)

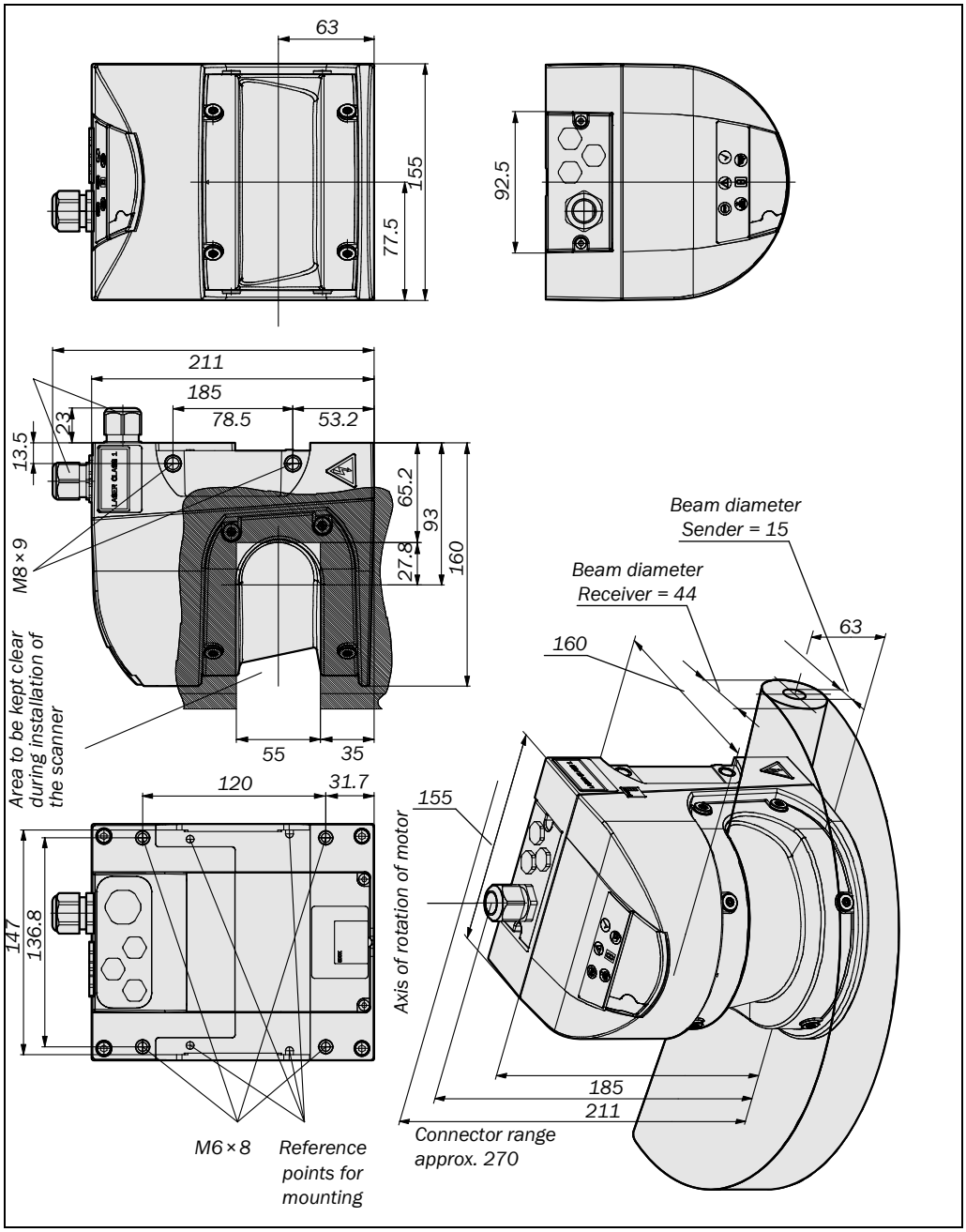

© SICK AG • Industrial Safety Systems • Germany • All rights reserved

12.6.2 Mounting kits

Fig. 102: Dimensional drawing, mounting kit 1, 2 and 3 (mm)

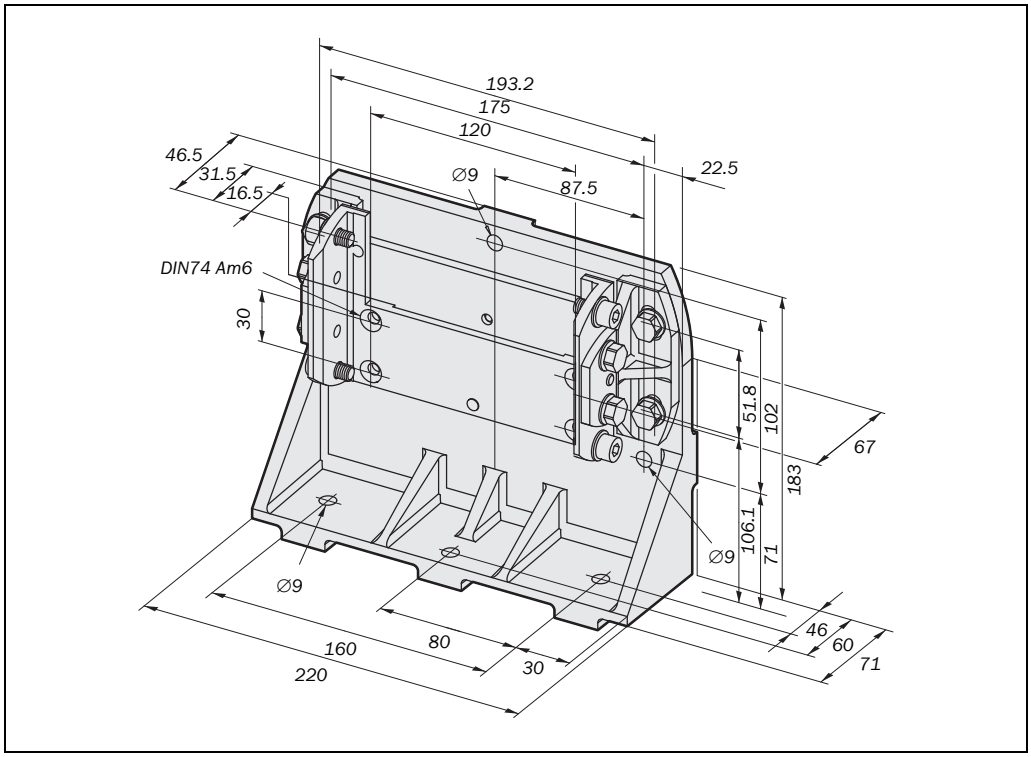

Fig. 103: Dimensional drawing heavy duty mounting bracket (mm)

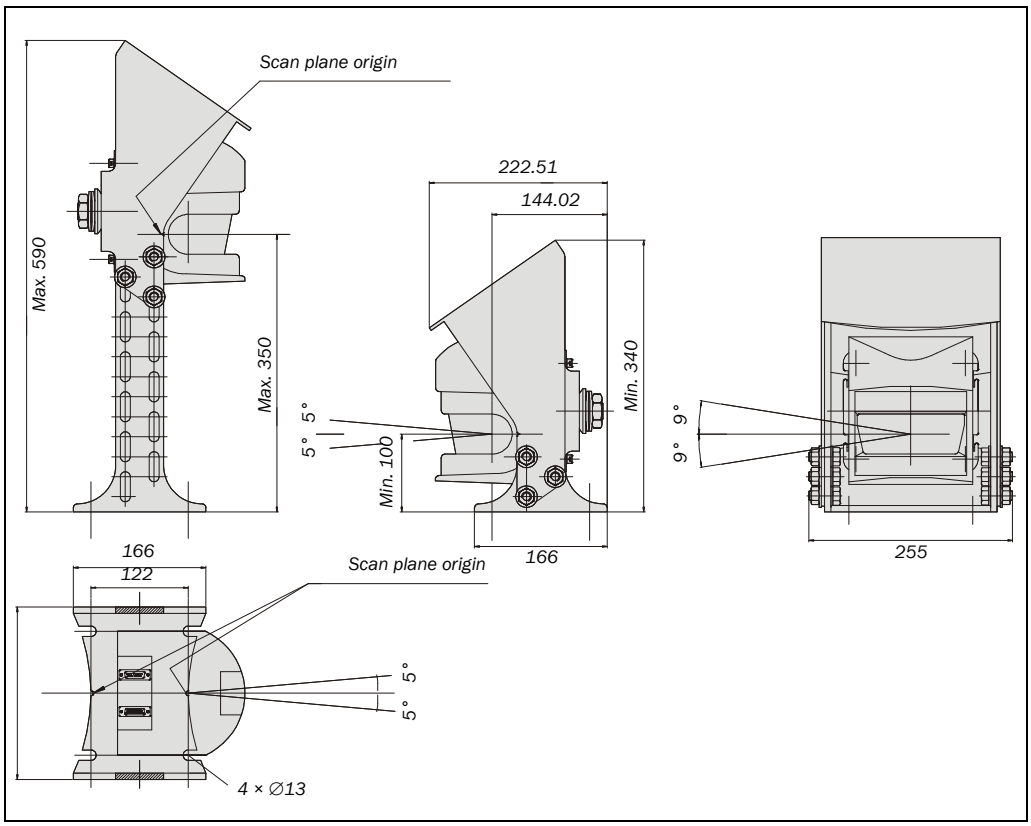

© SICK AG • Industrial Safety Systems • Germany • All rights reserved

12.6.3 Scan plane origin

Fig. 104: Dimensional drawing of the scan plane (mm)

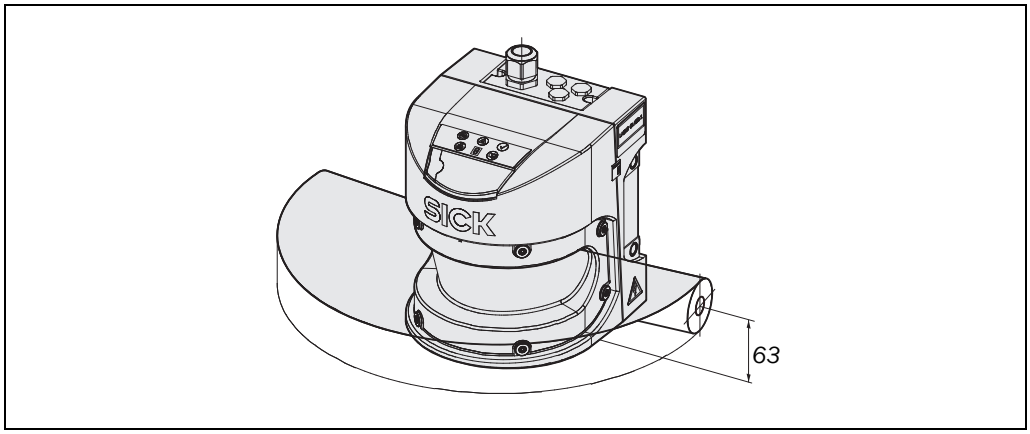

Fig. 105: Dimensional drawing of the scan plane with mounting kit 3 (mm)

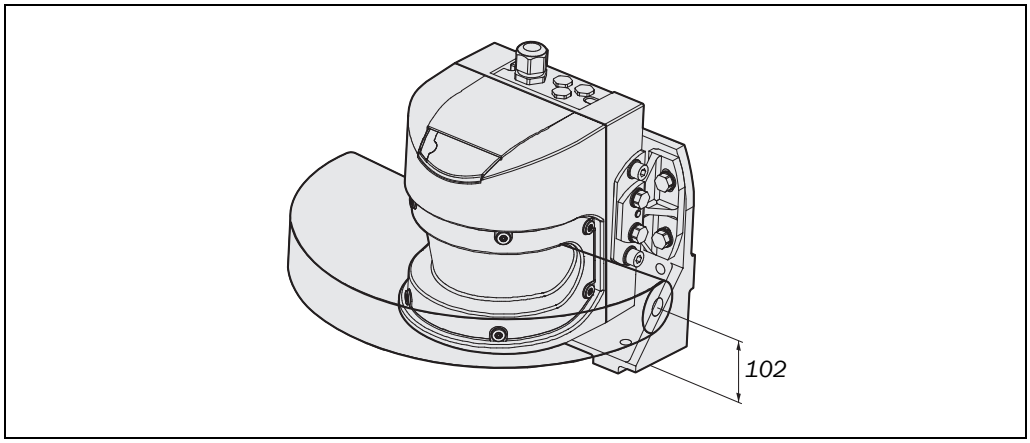

© SICK AG • Industrial Safety Systems • Germany • All rights reserved

13 Ordering information

13.1 Items supplied

- sensor head with I/O module mounted
- operating instructions and CDS (Configuration & Diagnostic Software) on CD-ROM
- adhesive label **Important information**

Note System plugs not included.

System plugs without cable and pre-assembled system plugs are available from SICK AG (see section 13.3.4 “System plug” on page 164). For further information see section 6.2 “System plug assembly” on page 99 and section 6.3 “Pre-assembled system plugs” on page 101.

13.2 Available systems

Tab. 44: Part numbers systems

Device type	Part	Part number
S30A-4011BA	S3000 Standard with Short Range sensor head	1028934
S30A-6011BA	S3000 Standard with Medium Range sensor head	1023546
S30A-7011BA	S3000 Standard with Long Range sensor head	1023890
S30A-4011CA	S3000 Advanced with Short Range sensor head	1028935
S30A-6011CA	S3000 Advanced with Medium Range sensor head	1023547
S30A-7011CA	S3000 Advanced with Long Range sensor head	1023891
S30A-4011DA	S3000 Professional with Short Range sensor head	1028936
S30A-6011DA	S3000 Professional with Medium Range sensor head	1019600
S30A-7011DA	S3000 Professional with Long Range sensor head	1023892
S30A-4011GB	S3000 Expert with Short Range sensor head	1052107
S30A-6011GB	S3000 Expert with Medium Range sensor head	1052108
S30A-7011GB	S3000 Expert with Long Range sensor head	1052109
S30A-4011EA	S3000 Remote with Short Range sensor head	1028938
S30A-6011EA	S3000 Remote with Medium Range sensor head	1023548
S30A-7011EA	S3000 Remote with Long Range sensor head	1023893

© SICK AG • Industrial Safety Systems • Germany • All rights reserved

13.3 Accessories/spare parts

13.3.1 Sensor heads

Tab. 45: Part numbers sensor heads

Part	Description	Part number
Short Range	Sensor head with up to 4 m scanning range	2034999
Medium Range	Sensor head with up to 5.5 m scanning range	2022972
Long Range	Sensor head with up to 7 m scanning range	2026747

13.3.2 I/O modules

Tab. 46: Part numbers I/O modules

I/O module	Part number
Standard	2026801
Advanced	2026802
Professional	2022827
Professional CMS (only for service purposes)	2030915
Expert[48)]	2057645
Remote	2026803

13.3.3 Mounting kits

Tab. 47: Part numbers mounting kit

Mounting kit	Description	Part number
1	Mounting bracket for direct mounting at the rear on wall or machine. No adjustment facility	2015623
2	Bracket only in conjunction with mounting kit 1. Mounting at the rear on wall or machine. Longitudinal and cross-wise adjustment possible	2015624
3	Bracket only in conjunction with mounting kit 1 and 2. Mounting at the rear or below on wall, floor or machine. Longitudinal and cross-wise adjustment possible	2015625
Heavy duty mounting bracket	Mounting bracket, heavy duty version, with protective cover, steel, painted, for floor mounting, height adjustment possible	7087514

[48)] Not compatible with sensor head with firmware < B02.40.

© SICK AG • Industrial Safety Systems • Germany • All rights reserved

13.3.4 System plug

Tab. 48: Part numbers system plugs

System plug	Description	Suitable for					Part number
		Standard	Advanced	Professional	Expert	Remote	
SX0A-A0000B	Without cable, for on-site assembly, one M20 cable gland and one M12 blanking plug	x	x	x	x	x	2023797
SX0A-A0000D	Without cable, for on-site assembly, one M20 cable gland, 3 M12 blanking plugs, 2 EMC-proof cable glands	x	x	x	x	x	2023310
SX0A-B0905B	Pre-assembled, 5 m cable length, 9 cores, one M20 cable gland and one M12 blanking plug	x				x	2027170
SX0A-B0905G	Pre-assembled, 5 m cable length, 9 cores, cable outlet at the rear, one M20 cable gland and one M12 blanking plug	x				x	2049222
SX0A-B0910B	Pre-assembled, 10 m cable length, 9 cores, one M20 cable gland and one M12 blanking plug	x				x	2027171
SX0A-B0920B	Pre-assembled, 20 m cable length, 9 cores, one M20 cable gland and one M12 blanking plug	x				x	2027814
SX0A-B1305B	Pre-assembled, 5 m cable length, 13 cores, one M20 cable gland and one M12 blanking plug		x				2027172
SX0A-B1310B	Pre-assembled, 10 m cable length, 13 cores, one M20 cable gland and one M12 blanking plug		x				2027173
SX0A-B1320B	Pre-assembled, 20 m cable length, 13 cores, one M20 cable gland and one M12 blanking plug		x				2027815
SX0A-B1705B	Pre-assembled, 5 m cable length, 17 cores, one M20 cable gland and one M12 blanking plug			x	x		2027174
SX0A-B1710B	Pre-assembled, 10 m cable length, 17 cores, one M20 cable gland and one M12 blanking plug			x	x		2027175
SX0A-B1720B	Pre-assembled, 20 m cable length, 17 cores, one M20 cable gland and one M12 blanking plug			x	x		2027816
SX0A-B1305D	Pre-assembled, 5 m cable length, 13 cores, one M20 cable gland, 3 M12 blanking plugs, 2 EMC-proof cable glands			x	x		2027176
SX0A-B1310D	Pre-assembled, 10 m cable length, 13 cores, one M20 cable gland, 3 M12 blanking plugs, 2 EMC-proof cable glands			x	x		2027177

© SICK AG • Industrial Safety Systems • Germany • All rights reserved

13.3.5 Service cables

Tab. 49: Part numbers service cables

Part	Description	Part number
Service cable 2 m	For connecting the configuration connection to the serial interface on the PC M8 × 4 pin/D-Sub 9 pin, approx. 2 m	6021195
Service cable 10 m	For connecting the configuration connection to the serial interface on the PC M8 × 4 pin/D-Sub 9 pin, approx. 10 m	2027649
USB service cable 2 m	For connecting the configuration connection to the USB interface on the PC M8 × 4-pin/USB-A plug, approx. 2 m	6034574
USB service cable 10 m	For connecting the configuration connection to the USB interface on the PC M8 × 4-pin/USB-A plug, approx. 10 m	6034575
USB/RS-232 adapter	USB-A plug to D-Sub socket, 9-pin	6035396

13.3.6 Self assembly connecting cables

Tab. 50: Part numbers connecting cables

Part	Part number
9 cores, cross-section 0.56 mm² (AWG 20), by the meter	6022651
13 cores, cross-section 0.56 mm² (AWG 20), by the meter	6025729
17 cores, cross-section 0.56 mm² (AWG 20), by the meter	6025730
EFI cable, per meter (1 × 2 × 0.22 mm²)	6029448
DeviceNet connecting cable, PVC, cable diameter 12.2 mm, by the meter	6030756
DeviceNet connecting cable, PVC, cable diameter 6.9 mm, by the meter	6030921
Interconnectron plug, can be used for DeviceNet connecting cable 6.9 mm (6030921).	6024742
M12 EMC-proof cable gland for EFI connections and incremental encoders, permissible cable diameter 3-6.5 mm, height 19 mm	5308757
M12 EMC-proof cable gland for EFI connections and incremental encoders, permissible cable diameter 3-6.5 mm, height 25 mm	5314772
M20 EMC-proof cable gland for supply cables and signal cables, permissible cable diameter 7-12 mm, height 23 mm	5308762
M20 EMC-proof cable gland for supply cables and signal cables, permissible cable diameter 10-14 mm, height 23 mm	5318531
M20 EMC-proof cable gland for supply cables and signal cables, permissible cable diameter 6-12 mm, height 32.5 mm	5323688
M20 EMC-proof cable gland for supply cables and signal cables, permissible cable diameter 10-14 mm, height 33 mm	5314774

13.3.7 Documentation

Tab. 51: Part numbers, documentation

Part	Part number
CDS (Configuration & Diagnostic Software) on CD-ROM including online documentation and operating instructions in all available languages	2032314

© SICK AG • Industrial Safety Systems • Germany • All rights reserved

13.3.8 Safety relays/compact safety controller

Tab. 52: Part numbers safety relays/compact safety controller

Part	Description	Part number
UE10-2FG3	Safety relay UE10-2FG3	1043916
UE12-2FG3	Safety relay UE12-2FG3	1043918
UE10-3OS2	Safety relay UE10-3OS with screw type terminals	6024917
UE10-3OS3	Safety relay UE10-3OS with removable terminals	6024918

13.3.9 Safety controllers

Tab. 53: Part numbers safety controllers

Part	Description	Part number
FX3-CPU000000	Flexi Soft CPU0 main unit Dual level spring clamp terminals	1043783
FX3-CPU130002	Flexi Soft CPU1 main unit 2 EFI connections Dual level spring clamp terminals	1043784
FX3-XTIO84002	Flexi Soft XTIO extension unit, 8 inputs/4 outputs Dual level spring clamp terminals	1044125
FX3-XTDI80002	Flexi Soft XTDI input expansion unit 8 inputs, dual level spring clamp terminals	1044124
FX3-MPL000001	Flexi Soft system plug	1043700
UE410-MU3T5	Flexi Classic main unit	6026136
UE410-XU3T5	Flexi Classic extension unit	6032470
UE410-8DI3	Flexi Classic input expansion unit	6026139

13.3.10 Network solutions

Tab. 54: Part numbers network solutions

Part	Description	Part number
UE4140	EFI gateway PROFIsafe	1029098
UE1140	EFI gateway PROFIBUS	1029099
UE1840	EFI gateway Ethernet TCP/IP	1029100
UE1940	EFI gateway CANopen	1040397
UE4740	EFI gateway PROFINET IO PROFIsafe	1046978

13.3.11 Miscellaneous

Tab. 55: Part numbers miscellaneous

Part	Description	Part number
Front screen	Spare parts set for front screen with replacement seal and screws	2027180
Plastic cleaner	Plastic cleaner and care product, anti-static	5600006
Lens cloth	Cloth for cleaning the front screen	4003353
Power supply, 2.1 A	Power supply, 24 V DC, 2.1 A, 50 W	7028789
Power supply, 3.9 A	Power supply, 24 V DC, 3.9 A, 95 W	7028790
Quatech interface card	Serial PC interface card with two RS-422 interfaces, up to 500 kBaud	6022515
LS70b	Scan finder	6020756

© SICK AG • Industrial Safety Systems • Germany • All rights reserved

14 Annex

14.1 Compliance with EU directives

EU declaration of conformity (excerpt)

The undersigned, representing the following manufacturer herewith declares that the product is in conformity with the provisions of the following EU directive(s) (including all applicable amendments), and that the respective standards and/or technical specifications are taken as the basis.

Complete EU declaration of conformity for download: www.sick.com

© SICK AG • Industrial Safety Systems • Germany • All rights reserved

14.2 Checklist for the manufacturer

SICK

Checklist for the manufacturer/installer
for the installation of electro-sensitive protective equipment (ESPE)

Details about the points listed below must be present at least during initial commissioning – they are, however, dependent on the respective application, the specifications of which are to be controlled by the manufacturer/installer.

This checklist should be retained and kept with the machine documentation to serve as reference during recurring tests.

1.	Have the safety rules and regulations been observed in compliance with the directives/standards applicable to the machine?	Yes ☐	No ☐
2.	Are the applied directives and standards listed in the declaration of conformity?	Yes ☐	No ☐
3.	Does the protective device comply with the required PL/SIL claim limit and PFHd in accordance with EN ISO 13849-1/EN 62061 and the required type in accordance with IEC 61496-1?	Yes ☐	No ☐
4.	Is the access to the hazardous area/hazardous point only possible through the protective field of the ESPE?	Yes ☐	No ☐
5.	Have appropriate measures been taken to protect (mechanical protection) or monitor (protective devices) any persons or objects in the hazardous area when protecting a hazardous area or hazardous point, and have these devices been secured or locked to prevent their removal?	Yes ☐	No ☐
6.	Are additional mechanical protective measures fitted and secured against manipulation which prevent reaching under, over or around the ESPE?	Yes ☐	No ☐
7.	Has the maximum stopping and/or stopping/run-down time of the machine been measured, specified and documented (at the machine and/or in the machine documentation)?	Yes ☐	No ☐
8.	Has the ESPE been mounted such that the required minimum distance from the nearest hazardous point has been achieved?	Yes ☐	No ☐
9.	Are the ESPE devices properly mounted and secured against manipulation after adjustment?	Yes ☐	No ☐
10.	Are the required protective measures against electric shock in effect (protection class)?	Yes ☐	No ☐
11.	Is the control switch for resetting the protective device (ESPE) or restarting the machine present and correctly installed?	Yes ☐	No ☐
12.	Are the outputs of the ESPE (OSSD) integrated according to required PL/SILCL compliant with EN ISO 13849-1/EN 62061 and does the integration correspond to the comply with the circuit diagrams?	Yes ☐	No ☐
13.	Has the protective function been checked in compliance with the test notes of this documentation?	Yes ☐	No ☐
14.	Are the specified protective functions effective at every operating mode that can be set?	Yes ☐	No ☐
15.	Are the switching elements activated by the ESPE, e.g. contactors, valves, monitored?	Yes ☐	No ☐
16.	Is the ESPE effective over the entire period of the dangerous state?	Yes ☐	No ☐
17.	Once initiated, will a dangerous state be stopped when switching the ESPE on or off and when changing the operating mode, or when switching to another protective device?	Yes ☐	No ☐
18.	Has the information label for the daily check been attached so that it is easily visible for the operator?	Yes ☐	No ☐

This checklist does not replace the initial commissioning, nor the regular inspection by qualified safety personnel.

© SICK AG • Industrial Safety Systems • Germany • All rights reserved

14.3 Glossary

AOPDDR Active opto-electronic protective device responsive to diffuse reflection (e.g. S3000, see also IEC 61 496-3)

Control input: dynamic, static The monitoring cases are switched using the control inputs. The S3000 Advanced has two static control inputs, the S3000 Professional and S3000 Expert have two static control inputs and two static/dynamic (for incremental encoders) control inputs.

External device monitoring (EDM) A means by which the electro-sensitive protective equipment (ESPE) monitors the state of control devices which are external to the ESPE.

Field set Protective field and warning field form a pair, the so-called field set.

Host/guest Two safety laser scanners in an EFI system. The control signals for monitoring case switching are applied to the inputs on the host. The guest is connected to the host via EFI and receives from the host the input information for local monitoring case switching.

I/O module Defines the functionality of the S3000. Five I/O modules (Standard, Advanced, Professional, Expert and Remote) are available.

Incremental encoder A component that produces electrical pulses in proportion to a movement. For these pulses, various physical parameters can be derived, e.g. velocity, distance, etc.

Monitoring case A field set (if necessary a simultaneous field set) is allocated to a monitoring case. Monitoring case switching is performed using the control inputs. In this way the S3000 can be adapted to the operating mode of the machine or system that it monitors.

OSSD The OSSD output is the switching output on the S3000. This is a semiconductor output and is periodically tested for correct function. The S3000 has two OSSD outputs that operate in parallel; for safety reasons these must be evaluated using two channels.

Protective field The protective field secures the hazardous area on a machine or vehicle. As soon as the safety laser scanner detects an object in the protective field, it switches the OSSDs to the OFF state and thus initiates the shutdown of the machine or stop of the vehicle.

Protective fields (dual) Two hazardous areas are monitored independently. For this purpose the cut-off paths must be routed to independent OSSD pairs with the aid of a Flexi Soft safety controller.

Remission Reflection of luminance. A measure of the remission is the level of remission defined as the ratio of the luminance reflected from a surface in the measuring direction and the luminance of a completely matt white surface (white standard).

Resolution/ object resolution The minimum size of an object that is acquired by the protective device and is guaranteed by the manufacturer.

Restart interlock The restart interlock is a protective device. In certain situations it prevents the machine from automatically restarting. This applies, e.g., after the scanner function has triggered during a dangerous machine state, after a change to the operating mode or the method of activation of the machine, or after the change to the start control device on the machine.

Sensor head Contains the opto-electronic acquisition system. Three sensor heads are available (Short Range with 4 m, Medium Range with 5.5 m and Long Range with 7 m scanning range).

Simultaneous monitoring On the S3000 it is possible to simultaneously monitor two field sets each with one protective field and one warning field or with two protective fields. In conjunction with a Flexi Soft safety controller, which provides several pairs of OSSD, e.g. two or four hazardous areas can be protected.

System plug Contains the configuration memory and all electrical connections. In this way the S3000 can be easily replaced. After re-commissioning the configuration is read from the system plug; the S3000 is then, normally, ready for use.

© SICK AG • Industrial Safety Systems • Germany • All rights reserved

Universal I/O The S3000 has three universal I/O connections. These connections can be configured as inputs (e.g. for stand-by, EDM or reset) or as outputs (e.g. for device error, contamination or second warning field).

Warning field The warning field is a field with a radius of 49 m. Using this field larger areas can be controlled and simple switching functions (e.g. warning functions) triggered. The warning field is not allowed to be used for tasks related to personnel protection.

© SICK AG • Industrial Safety Systems • Germany • All rights reserved

14.4 List of tables

Tab. 1: Overview on disposal by components 14
Tab. 2: Functions of the I/O modules 23
Tab. 3: Possible applications for the S3000 variants 24
Tab. 4: Interoperability with safety laser scanners 31
Tab. 5: Interoperability with safety laser scanners in compatibility mode 31
Tab. 6: Functions of the I/O modules in compatibility mode 34
Tab. 7: Required compatibility mode with different firmware versions of the S3000 in an EFI system with other S3000 35
Tab. 8: Required compatibility mode with different firmware versions of the S3000 in an EFI system with other safety laser scanners 35
Tab. 9: Comparison of mobile and stationary applications 37
Tab. 10: Maximum protective field ranges 38
Tab. 11: Figure from experience for the necessary input delay 44
Tab. 12: Level at the connections for the control inputs for complementary sampling 44
Tab. 13: Truth table for 1-of-n sampling with two input pairs 45
Tab. 14: Behavior of the S3000 on a contactor malfunction 47
Tab. 15: Number of field sets that can be configured per variant and use 51
Tab. 16: Number of monitoring cases per variant and application 57
Tab. 17: Truth table with complementary evaluation 58
Tab. 18: Truth table for 1-of-n sampling 59
Tab. 19: Recommended multiple sampling 63
Tab. 20: Advantages and disadvantages of mounting variations 71
Tab. 21: Unprotected areas 82
Tab. 22: Size of the unprotected areas 84
Tab. 23: Pin assignments of the I/O modules 97
Tab. 24: Use the cable entries supplied 100
Tab. 25: Recommended wire cross-sections 100
Tab. 26: Pin assignment pre-assembled system plug 102
Tab. 27: Pin assignment configuration connection M8 × 4 103
Tab. 28: 7-segment display during and after the power up sequence on initial commissioning 121
Tab. 29: LED indication after the power up sequence 121
Tab. 30: 7-segment display during and after the power up sequence on re-commissioning 124
Tab. 31: LED indication after the power up sequence 125
Tab. 32: Compatibility of the Standard I/O module 129
Tab. 33: Compatibility of the Advanced I/O module 129
Tab. 34: Compatibility of the Professional I/O module 130
Tab. 35: Compatibility of the Remote I/O module 130
Tab. 36: Compatibility of the Expert I/O module 130
Tab. 37: Error and status indications on the LEDs 133

© SICK AG • Industrial Safety Systems • Germany • All rights reserved

Tab. 38: Error and status indications of the LEDs in the compatibility mode....134
Tab. 39: Error and status indications on the 7-segment display....135
Tab. 40: Supplements for multiple sampling....144
Tab. 41: Data sheet S3000....147
Tab. 42: Status information of the S3000 (data from the S3000)....156
Tab. 43: Control features on the S3000 (data to the S3000)....158
Tab. 44: Part numbers systems....162
Tab. 45: Part numbers sensor heads....163
Tab. 46: Part numbers I/O modules....163
Tab. 47: Part numbers mounting kit....163
Tab. 48: Part numbers system plugs....164
Tab. 49: Part numbers service cables....165
Tab. 50: Part numbers connecting cables....165
Tab. 51: Part numbers, documentation....165
Tab. 52: Part numbers safety relays/compact safety controller....166
Tab. 53: Part numbers safety controllers....166
Tab. 54: Part numbers network solutions....166
Tab. 55: Part numbers miscellaneous....166

© SICK AG • Industrial Safety Systems • Germany • All rights reserved

14.5 List of illustrations

Fig. 1: Principle of operation, time-of-flight measurement by the S3000 17
Fig. 2: Principle of operation, rotation of the S3000 18
Fig. 3: Triple field mode with one protective field and two warning fields 19
Fig. 4: Monitoring cases 20
Fig. 5: Monitoring possibilities with the S3000 20
Fig. 6: Simultaneous monitoring 21
Fig. 7: Sensor head, I/O module and system plug 21
Fig. 8: Protective field ranges of the sensor heads 22
Fig. 9: Available I/O modules 22
Fig. 10: Status indicators on the S3000 27
Fig. 11: S3000 Remote in combination with a Flexi Soft safety controller or another S3000 28
Fig. 12: EFI systems comprising two safety laser scanners 29
Fig. 13: EFI system with sens:Control device 29
Fig. 14: EFI system with Flexi Soft safety controller 30
Fig. 15: EFI network topologies 30
Fig. 16: Compatibility mode 33
Fig. 17: Calculation of pulses per cm travel 40
Fig. 18: Tolerances allowed on the dynamic inputs 42
Fig. 19: Possible ways of monitoring case switching 43
Fig. 20: Schematic outline of the operation with restart interlock 49
Fig. 21: Configuration example universal I/O connections of the S3000 50
Fig. 22: Creating a field set in the CDS 52
Fig. 23: Configuring protective field and warning field 53
Fig. 24: Reading the protective field 54
Fig. 25: Schematic diagram of contour as reference 55
Fig. 26: Contour as reference for vertical operation 56
Fig. 27: Example for velocity routing on an AGV 61
Fig. 28: Connection diagram for velocity routing 61
Fig. 29: Example for velocity routing in the Flexi Soft Designer 62
Fig. 30: Schematic layout of the monitoring case switching 64
Fig. 31: Horizontally mounted stationary application 67
Fig. 32: Danger of reaching over (mm) 70
Fig. 33: Mounting variations for the scan plane 71
Fig. 34: Relationship between resolution and protective field mounting height 72
Fig. 35: Access protection 73
Fig. 36: Minimum distance to the hazardous area 75
Fig. 37: Stopping distance 78
Fig. 38: Braking distance as a function of the vehicle velocity 78
Fig. 39: Supplement due to lack of ground clearance 80
Fig. 40: Diagram of ground clearance of the vehicle 80
Fig. 41: Protective field width 81

© SICK AG • Industrial Safety Systems • Germany • All rights reserved

Fig. 42: Mounting height ... 81
Fig. 43: Unprotected areas for mobile applications ... 82
Fig. 44: Fitting the S3000 in the vehicle trim ... 83
Fig. 45: Unprotected areas for stationary applications ... 84
Fig. 46: Example of mounting with cover plates ... 85
Fig. 47: Form of the recess ... 85
Fig. 48: Advancement for the switch timing ... 86
Fig. 49: Example of advancing the timing for the switching ... 87
Fig. 50: Prevent crawling beneath, standing behind, climbing over ... 88
Fig. 51: Threaded holes for direct mounting ... 89
Fig. 52: Mounting with mounting kit 1 ... 89
Fig. 53: Mounting with mounting kit 2 ... 90
Fig. 54: Mounting with mounting kit 3 ... 91
Fig. 55: Mounting with the Heavy Duty mounting bracket ... 92
Fig. 56: Opposite mounting ... 93
Fig. 57: Inclined, parallel mounting ... 93
Fig. 58: Offset parallel mounting ... 93
Fig. 59: Mounting on a cross ... 93
Fig. 60: Reverse mounting, parallel ... 93
Fig. 61: Screw terminal strip on the system plug ... 96
Fig. 62: Connection sketch RS-422 interface ... 99
Fig. 63: System plug SX0A-A0000B ... 99
Fig. 64: System plug SX0A-A0000D ... 100
Fig. 65: Pin assignment configuration connection M8 × 4 ... 103
Fig. 66: Hazardous area protection with S3000 Standard ... 104
Fig. 67: Access protection with S3000 Standard ... 105
Fig. 68: Hazardous area protection with S3000 Advanced ... 105
Fig. 69: Access protection with S3000 Advanced ... 106
Fig. 70: Vehicle monitoring with S3000 Standard ... 106
Fig. 71: Velocity-dependent vehicle monitoring with S3000 Professional ... 107
Fig. 72: Mobile application with S3000 Expert ... 107
Fig. 73: Mobile application with S3000 Professional ... 108
Fig. 74: Mobile application with S3000 Expert and S300 Professional ... 109
Fig. 75: S3000 with safety controller ... 110
Fig. 76: S3000 bus interface ... 110
Fig. 77: Connection diagram for restart interlock and external device monitoring ... 112
Fig. 78: Connection diagram for restart interlock and external device monitoring using UE10 series ... 112
Fig. 79: Connection diagram for protective field switching using two static inputs ... 113
Fig. 80: Connection diagram for protective field switching using four static inputs ... 113
Fig. 81: Connection diagram for protective field switching using static and dynamic inputs ... 114

© SICK AG • Industrial Safety Systems • Germany • All rights reserved

Fig. 82: Connection diagram for protective field switching between two S3000 using static inputs ... 114
Fig. 83: Connection diagram for protective field switching between S3000 and S300 Mini using static inputs ... 115
Fig. 84: Connection diagram for protective field switching between two S3000 using static and dynamic inputs ... 115
Fig. 85: Connection diagram for protective field switching between an S3000 and an S300 using static and dynamic inputs ... 116
Fig. 86: Connection diagram for protective field switching between an S3000 and an S300 Mini using static and dynamic inputs ... 116
Fig. 87: Connection diagram for protective field switching between two S3000 using a Flexi Soft safety controller ... 117
Fig. 88: Connection diagram: protective field switching between S3000 and S300 using a Flexi Soft safety controller ... 117
Fig. 89: Configuration connection ... 119
Fig. 90: Undo the fixing screws for the front screen ... 127
Fig. 91: Inserting the rubber seal ... 127
Fig. 92: Depth for pressing in the seal ... 128
Fig. 93: Diagram scanning range with Short Range sensor head ... 142
Fig. 94: Diagram scanning range with Medium Range sensor head ... 142
Fig. 95: Diagram scanning range with Long Range sensor head ... 143
Fig. 96: Reset pulse requirements ... 143
Fig. 97: Diagram of the test pulse at the OSSDs ... 145
Fig. 98: Voltage test after switching on the OSSDs ... 146
Fig. 99: Shut-down test ... 146
Fig. 100: Voltage test ... 146
Fig. 101: Dimensional drawing S3000 (mm) ... 159
Fig. 102: Dimensional drawing, mounting kit 1, 2 and 3 (mm) ... 160
Fig. 103: Dimensional drawing heavy duty mounting bracket (mm) ... 160
Fig. 104: Dimensional drawing of the scan plane (mm) ... 161
Fig. 105: Dimensional drawing of the scan plane with mounting kit 3 (mm) ... 161

© SICK AG • Industrial Safety Systems • Germany • All rights reserved

8009942/YY95/2016-02-10 · REIPA/XX (2016-03) · A4 sw int44

Australia
Phone +61 3 9457 0600
1800 334 802 – tollfree
E-Mail sales@sick.com.au

Austria
Phone +43 (0)22 36 62 28 8-0
E-Mail office@sick.at

Belgium/Luxembourg
Phone +32 (0)2 466 55 66
E-Mail info@sick.be

Brazil
Phone +55 11 3215-4900
E-Mail marketing@sick.com.br

Canada
Phone +1 905 771 14 44
E-Mail information@sick.com

Czech Republic
Phone +420 2 57 91 18 50
E-Mail sick@sick.cz

Chile
Phone +56 2 2274 7430
E-Mail info@schadler.com

China
Phone +86 4000 121 000
E-Mail info.china@sick.net.cn

Denmark
Phone +45 45 82 64 00
E-Mail sick@sick.dk

Finland
Phone +358-9-2515 800
E-Mail sick@sick.fi

France
Phone +33 1 64 62 35 00
E-Mail info@sick.fr

Gemany
Phone +49 211 5301-301
E-Mail info@sick.de

Great Britain
Phone +44 (0)1727 831121
E-Mail info@sick.co.uk

Hong Kong
Phone +852 2153 6300
E-Mail ghk@sick.com.hk

Hungary
Phone +36 1 371 2680
E-Mail office@sick.hu

India
Phone +91–22–4033 8333
E-Mail info@sick-india.com

Israel
Phone +972-4-6881000
E-Mail info@sick-sensors.com

Italy
Phone +39 02 27 43 41
E-Mail info@sick.it

Japan
Phone +81 (0)3 5309 2112
E-Mail support@sick.jp

Malaysia
Phone +603 808070425
E-Mail enquiry.my@sick.com

Netherlands
Phone +31 (0)30 229 25 44
E-Mail info@sick.nl

New Zealand
Phone +64 9 415 0459
0800 222 278 – tollfree
E-Mail sales@sick.co.nz

Norway
Phone +47 67 81 50 00
E-Mail sick@sick.no

Poland
Phone +48 22 837 40 50
E-Mail info@sick.pl

Romania
Phone +40 356 171 120
E-Mail office@sick.ro

Russia
Phone +7-495-775-05-30
E-Mail info@sick.ru

Singapore
Phone +65 6744 3732
E-Mail sales.gsg@sick.com

Slovakia
Phone +421 482 901201
E-Mail mail@sick-sk.sk

Slovenia
Phone +386 (0)1-47 69 990
E-Mail office@sick.si

South Africa
Phone +27 11 472 3733
E-Mail info@sickautomation.co.za

South Korea
Phone +82 2 786 6321
E-Mail info@sickkorea.net

Spain
Phone +34 93 480 31 00
E-Mail info@sick.es

Sweden
Phone +46 10 110 10 00
E-Mail info@sick.se

Switzerland
Phone +41 41 619 29 39
E-Mail contact@sick.ch

Taiwan
Phone +886 2 2375-6288
E-Mail sales@sick.com.tw

Thailand
Phone +66 2645 0009
E-Mail tawiwat@sicksgp.com.sg

Turkey
Phone +90 (216) 528 50 00
E-Mail info@sick.com.tr

United Arab Emirates
Phone +971 (0) 4 88 65 878
E-Mail info@sick.ae

USA/Mexico
Phone +1(952) 941-6780
1 (800) 325-7425 – tollfree
E-Mail info@sick.com

Vietnam
Phone +84 8 62920204
E-Mail Ngo.Duy.Linh@sicksgp.com.sg

More representatives and agencies
at **www.sick.com**

SICK
Sensor Intelligence.