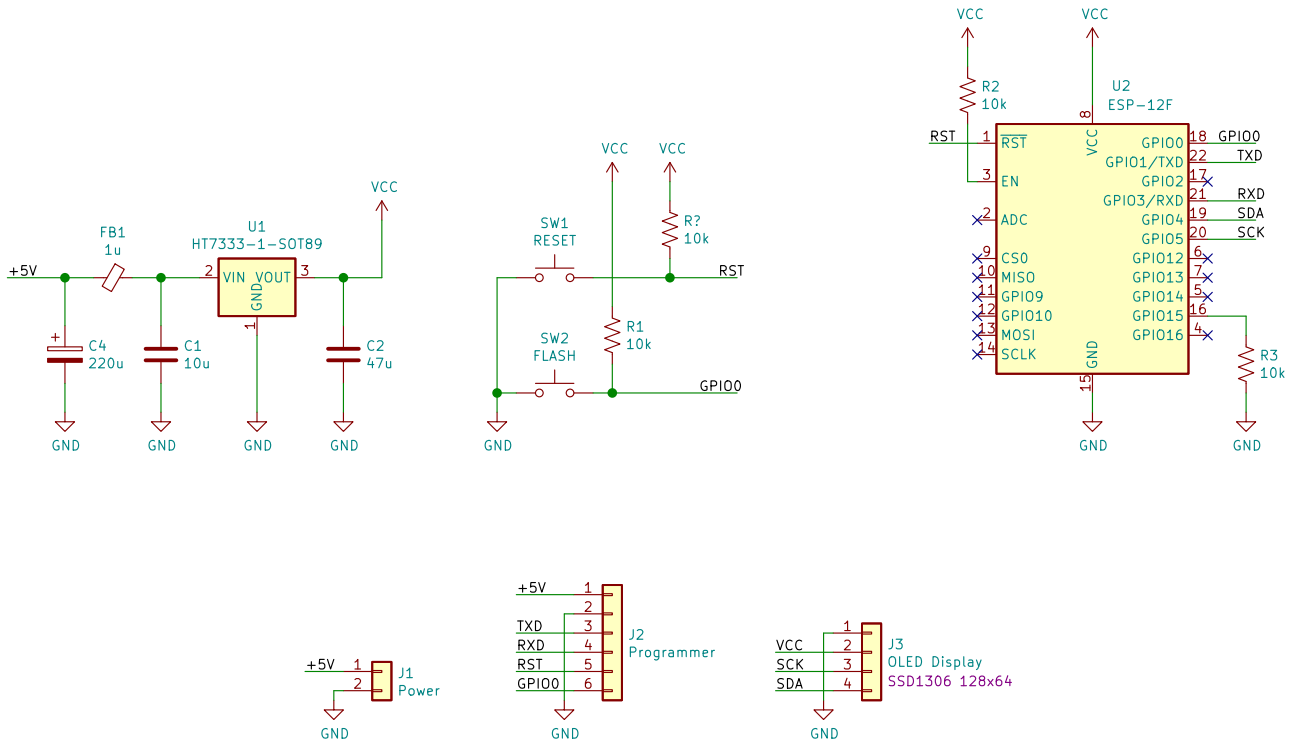

Skatech Lab

Sheet: /

File: ESP8266-Clock.sch

Title: ESP8266 WiFi Clock

Size: A4	Date: 2023-01-03	**Rev: 1.0**
KiCad E.D.A. eeschema (5.1.10)-1		Id: 1/1